YANMAR

PARTS CATALOG

0CF50-M00241EN

Last update Jan., 2018

Introduction

1. This parts catalog for 6LY440, 6LY400 is published as a revised edition.

	Date of issue	Remarks
First edition	Jan., 2016	No need
1st revised edition	Nov., 2017	

2. This parts catalog does not contain the technical data needed for maintenance service.

3. The illustrations used in this parts catalog have been simplified for clarity.

4. The contents of this parts catalog are subject to change without notice.

5. Be sure to use only Yanmar genuine parts for repairs. If imitation parts are used, it may cause engine defects.

Contents

0CF50-M00241

Fig. No.	Fig. Name
6LY440,400	
1.	CYLINDER BLOCK
2.	GEAR HOUSING
3.	FLYWHEEL HOUSING
4.	OIL SUMP & DIPSTICK
5.	BREATHER
61.	(5A)BREATHER(SOLAS)(OPTIONAL)
6.	BREATHER(MIST RETURN)
7.	MOUNTING FOOT
8.	LABEL
9.	COVER(TOP)
10.	COVER(BELT)(WITHOUT 2ND GENERATOR SPEC.)
60.	(10A)COVER(BELT)(WITH 2ND GENERATOR SPEC.)
11.	COVER(FUSE)
12.	COVER(ECU)
13.	CYLINDER HEAD & ROCKER ARM
14.	BONNET
15.	HARNESS GUIDE
16.	SUCTION MANIFOLD
17.	EXHAUST MANIFOLD
18.	FILLER(BY-PASS)(V-DRIVE SPEC.)
19.	MIXING ELBOW(STANDARD TYPE)
20.	MIXING ELBOW(U TYPE)
62.	(20A)MIXING ELBOW(V-DRIVE SPEC.)
21.	TURBINE
22.	INTER COOLER
23.	CAMSHAFT & DRIVING GEAR
24.	CRANKSHAFT & FLYWHEEL
25.	PISTON & CONNECTING ROD
26.	LUB. OIL COOLER & FILTER
27.	LUB. OIL PUMP & PIPE
28.	LUB. OIL PIPE(TURBINE)
29.	OIL SUCTION/DRAIN PUMP(OPTIONAL)
30.	COOLING PUMP(SEA WATER)
31.	COOLING PUMP(FRESH WATER)
32.	COOLER(FRESH WATER)
33.	COOLING PIPE(SEA WATER)
34.	COOLING PIPE(FRESH WATER)
35.	COOLING PIPE(FRESH WATER)(BY-PASS)
36.	BILGE PUMP(OPTIONAL)
37.	FUEL SUPPLY PUMP
38.	FUEL INJECTION VALVE
39.	FUEL INJECTION PIPE
40.	DRIVING DEVICE(FUEL SUPPLY PUMP)
41.	FUEL FILTER
42.	WATER SEPARATOR(OPTIONAL)
43.	COMMON RAIL
44.	FUEL PIPE
45.	FUEL PIPE(COMMON RAIL RETURN)
46.	FUEL PIPE(INJECTION VALVE RETURN)

Contents

0CF50-M00241

Fig. No.	Fig. Name
47.	ELECTRONIC CONTROL UNIT(ECU)
48.	BRACKET(ECU)
49.	ELECTRONIC DRIVE UNIT(EDU)
50.	STARTER MOTOR
51.	GENERATOR(BOSCH)
63.	(51A)GENERATOR(DENSO)
64.	(51B)GENERATOR KIT(2ND)(BOSCH)(OPTIONAL)
65.	(51C)GENERATOR KIT(2ND)(DENSO)(OPTIONAL)
52.	WIRE HARNESS
66.	(52A)WIRE HARNESS(SOLAS)(OPTIONAL)
53.	WIRE HARNESS(EDU)
54.	SENSOR
67.	(54A)SENSOR(SOLAS)(OPTIONAL)
55.	BRACKET(FUSE)
56.	TERMINAL
57.	HEATER
58.	CLUTCH
59.	TOOL

Fig. No.	Fig. Name

Fig.1. CYLINDER BLOCK

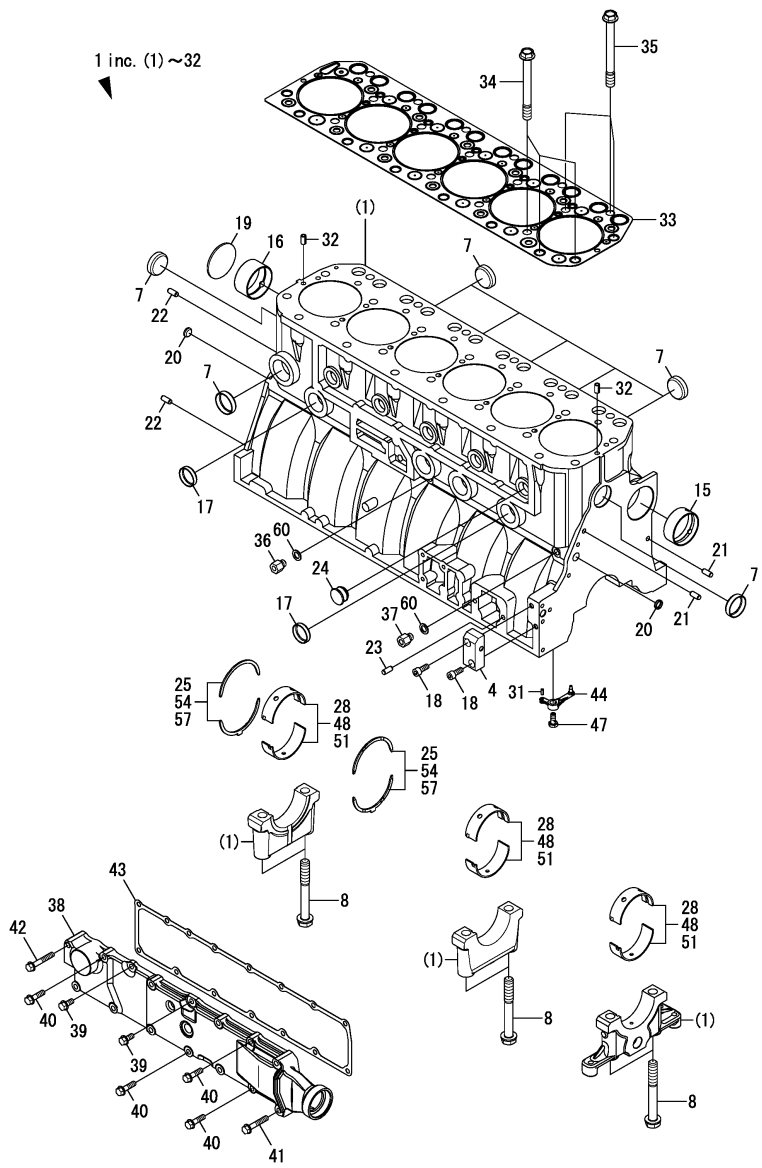

(A)=6LY440 (D)=
(B)=6LY400 (E)=
(C)= (F)=

No.	Lev.	Parts No.	Description	Q'ty (A)	(B)	(C)	(D)	(E)	(F)	I	R
1	1	719581-01100	BLOCK ASSY, CYLINDER	1	1						
1-1	1	719581-01101	BLOCK ASSY, CYLINDER	1	1					N	
	(A=E/#2180)		(B=E/#2178)								
4	3	119581-01020	MOUNT, GEAR CASE	1	1						
7	3	119885-01990	PLUG, 40	8	8						
8	3	119593-02070	BOLT, METAL CAP	14	14						
15	3	119000-02410	BUSH, CAMSHAFT	1	1						
16	3	119593-02420	BUSH, CAMSHAFT	3	3						
17	3	119285-11990	PLUG, CUP TYPE 35	4	4						
18	3	26455-080202	BOLT, M8X20	2	2						
19	3	27231-650000	PLUG, 65	1	1						
20	3	27241-160000	PLUG, 16	2	2						
21	2	129100-01580	PIN, PARALLEL 8X16	2	2						
22	2	129100-01580	PIN, PARALLEL 8X16	2	2						
23	2	129100-01580	PIN, PARALLEL 8X16	4	4						
24	2	119000-01840	PLUG, RUBBER	5	5						
25	2	719593-02590	BEARING, THRUST	2	2						
28	2	719593-02800	BEARING, MAIN	7	7						
31	2	22351-040010	PIN, SPRING 4.0X10	6	6						
32	2	22351-080016	PIN, SPRING 8.0X16	2	2						
33	1	119581-01350	GASKET, HEAD T=1.3	1	1						
34	1	119578-01200	BOLT, HEAD	13	13						
35	1	119578-01210	BOLT, HEAD	13	13						
36	1	119581-39080	BOLT,SPACER BLOCK	1	1						
37	1	119581-39090	BOLT,SPACER BLOCK	1	1						
38	1	119593-01751	COVER	1	1						
39	1	26106-080182	BOLT, M8X 18 PLATED	2	2						
40	1	26106-080302	BOLT, M8X 30 PLATED	10	10						
41	1	26106-080452	BOLT, M8X 45 PLATED	2	2						
42	1	26106-080502	BOLT, M8X 50 PLATED	1	1						
43	1	119593-01760	GASKET	1	1						
44	1	119593-39560	NOZZLE ASSY, COOLING	6	6						
47	1	119595-39580	BOLT, PIPE JOINT	6	6						
48	1	119593-02500	METAL, MAIN 0.25 US	7	7						1
51	1	119593-02120	METAL, MAIN 0.50 US	7	7						2
54	1	119593-02600	BEARING, THRUST 0.25	2	2						3
57	1	119593-02170	BEARING, THRUST 0.50	2	2						4
60	1	23414-120000	GASKET, 12X1.0	2	2						

Remarks
(1)Under-sized(U.S.=0.25) parts.
(2)Under-sized(U.S.=0.50) parts.
(3)Over-sized(O.S.=0.25) parts.
(4)Over-sized(O.S.=0.50) parts.

N:Old $\frac{\text{Yes}}{\text{No}}$ New, Q:Old $\frac{\text{No}}{\text{Yes}}$ New, R:Old $\frac{\text{Yes}}{\text{Yes}}$ New, S:Old $\frac{\text{No}}{\text{No}}$ New, W:Add, Z:Discontinued, F:Interchangeable by set, K:Q'ty Change

Copyright (C) 2017 YANMAR CO., LTD. All RightsReserved.

Fig.2. GEAR HOUSING

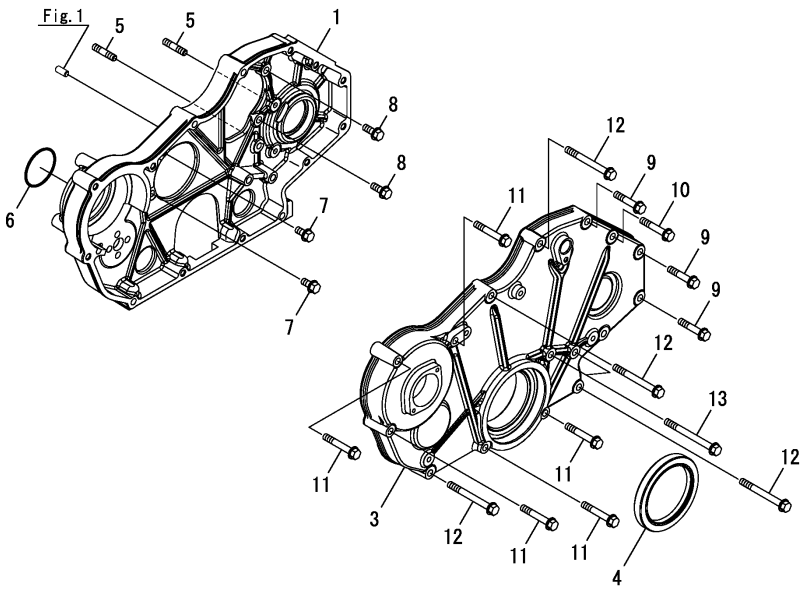

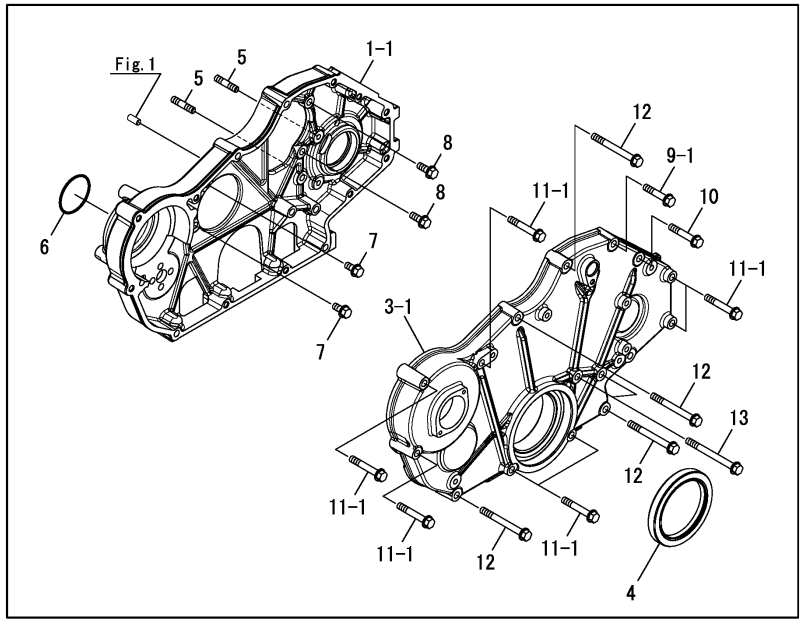

(A)=6LY440 (D)=
(B)=6LY400 (E)=
(C)= (F)=

No.	Lev.	Parts No.	Description	Q'ty (A)	(B)	(C)	(D)	(E)	(F)	I	R
1	1	119581-01210	CASE, GEAR	1	1						
1-1	1	119581-01211	CASE, GEAR	1	1					S	
	(A=E/#1716)	(B=E/#1740)									
1-2	1	119581-01212	CASE, GEAR	1	1					N	
	(A=E/#2299)	(B=E/#2321)									
3	1	119581-01220	COVER, GEAR CASE	1	1						
3-1	1	119581-01221	COVER, GEAR CASE	1	1					S	
	(A=E/#1716)	(B=E/#1740)									
3-2	1	119581-01223	COVER, GEAR CASE	1	1					N	
	(A=E/#2299)	(B=E/#2321)									
4	1	119595-01800	SEAL, TC8010513	1	1						
5	1	121850-01920	STUD, 2D8X22	2	2						
6	1	24326-000500	O-RING, 4DG50.0	1	1						
7	1	26106-080162	BOLT, M8X 16 PLATED	2	2						
8	1	26106-080202	BOLT, M8X 20 PLATED	2	2						
9	1	26106-080402	BOLT, M8X 40 PLATED	3	3						
9-1	1	26106-080402	BOLT, M8X 40 PLATED	1	1					K	
	(A=E/#1716)	(B=E/#1740)									
10	1	26106-080452	BOLT, M8X 45 PLATED	1	1						
11	1	26106-080502	BOLT, M8X 50 PLATED	5	5						
11-1	1	26106-080502	BOLT, M8X 50 PLATED	7	7					K	
	(A=E/#1716)	(B=E/#1740)									
12	1	26106-080752	BOLT, M8X 75 PLATED	4	4						
13	1	26106-080852	BOLT, M8X 85 PLATED	2	2						

N:Old $\overset{\text{Yes}}{\underset{\text{No}}{\leftrightarrows}}$ New, Q:Old $\overset{\text{No}}{\underset{\text{Yes}}{\leftrightarrows}}$ New, R:Old $\overset{\text{Yes}}{\underset{\text{Yes}}{\leftrightarrows}}$ New, S:Old $\overset{\text{No}}{\underset{\text{No}}{\leftrightarrows}}$ New, W:Add, Z:Discontinued, F:Interchangeable by set, K:Q'ty Change

Copyright (C) 2017 YANMAR CO., LTD. All RightsReserved.

Fig.3. FLYWHEEL HOUSING

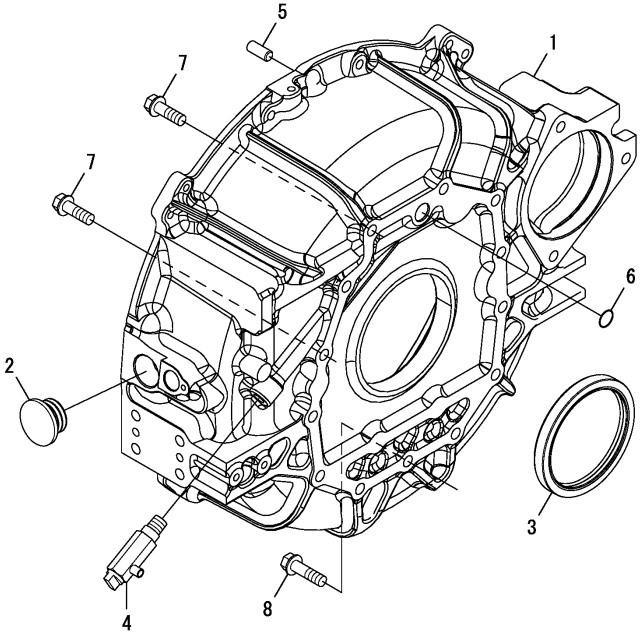

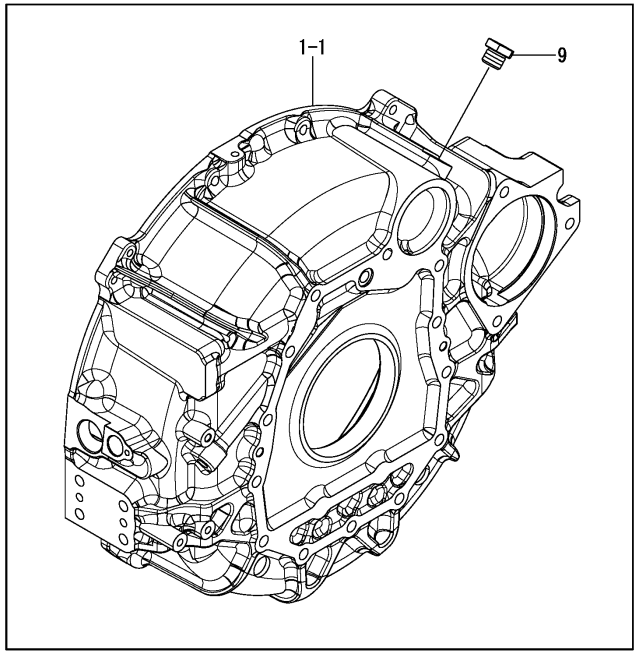

(A)=6LY440 (D)=
(B)=6LY400 (E)=
(C)= (F)=

No.	Lev.	Parts No.	Description	Q'ty (A)	(B)	(C)	(D)	(E)	(F)	I	R
1	1	119581-01600	HOUSING, FLYWHEEL	1	1						
1-1	1	119581-01601	HOUSING, FLYWHEEL	1	1					N	
	(A=E/#2314)	(B=E/#2321)									
2	1	119575-01750	PLUG, SCREW	1	1						
3	1	124411-01780	SEAL, HTC95X115X12	1	1						
4	1	128371-01800	COCK ASSY, 1/4	1	1						
5	1	22312-100220	PIN, PARALLEL M10X22	1	1						
6	1	24311-000140	O-RING, 1AP14.0	1	1						
7	1	26106-100302	BOLT, M10X 30 PLATED	8	8						
8	1	26106-100352	BOLT, M10X 35 PLATED	5	5						
9	1	23887-180002	PLUG, 18	1	1					W	
	(A=E/#2314)	(B=E/#2321)									

N:Old $\xleftarrow[\text{No}]{\text{Yes}}$ New, Q:Old $\xleftarrow[\text{Yes}]{\text{No}}$ New, R:Old $\xleftarrow[\text{Yes}]{\text{Yes}}$ New, S:Old $\xleftarrow[\text{No}]{\text{No}}$ New, W:Add, Z:Discontinued, F:Interchangeable by set, K:Q'ty Change

Copyright (C) 2017 YANMAR CO., LTD. All RightsReserved.

Fig.4. OIL SUMP & DIPSTICK

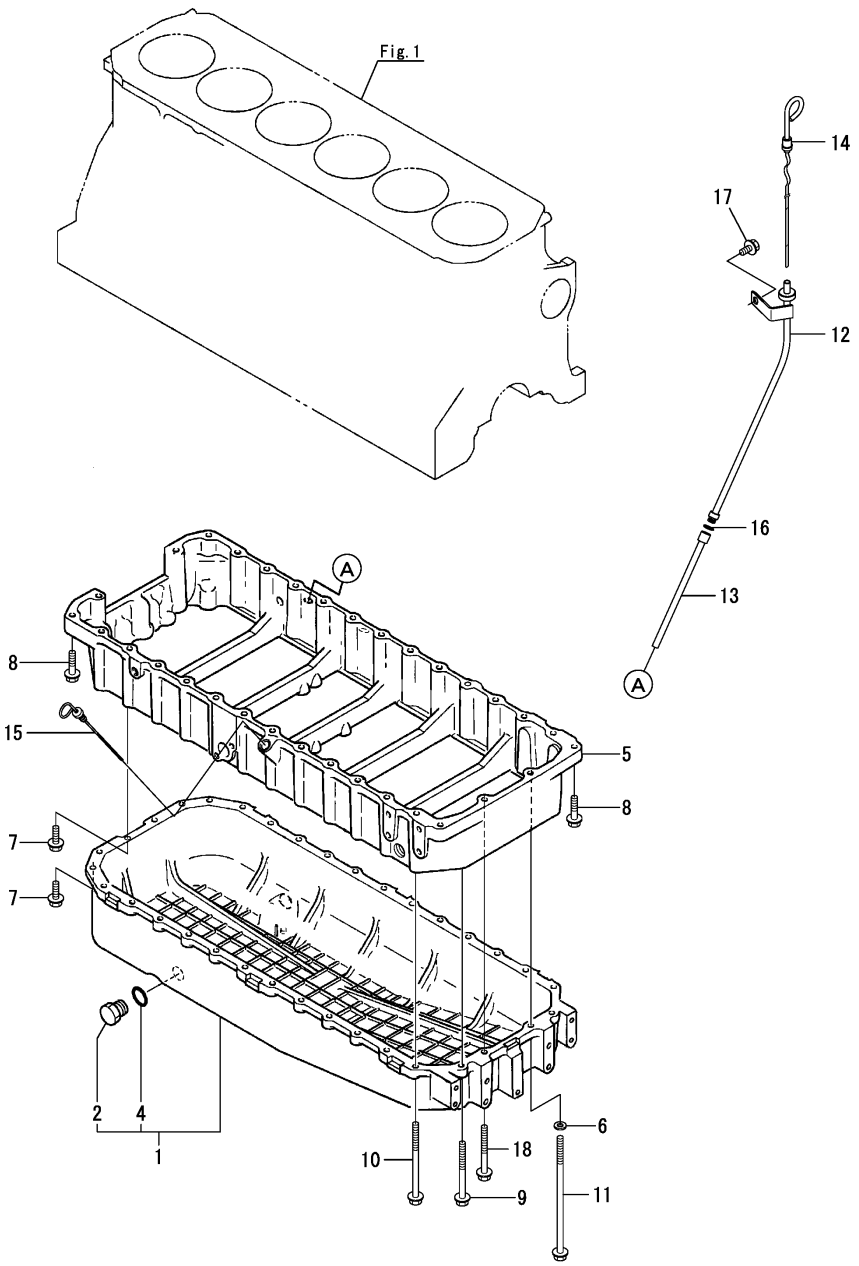

(A)=6LY440
(B)=6LY400
(C)=
(D)=
(E)=
(F)=

No.	Lev.	Parts No.	Description	Q'ty (A)	(B)	(C)	(D)	(E)	(F)	I	R
1	1	719573-01540	SUMP ASSY, OIL	1	1						
2	2	171301-01640	PLUG, M22	1	1						
4	2	24341-000240	O-RING, 1AS24.0	1	1						
5	1	119593-01732	SPACER	1	1						
6	1	22137-080000	WASHER, 8	2	2						
7	1	26106-080252	BOLT, M8X 25 PLATED	4	4						
8	1	26106-080352	BOLT, M8X 35 PLATED	4	4						
9	1	26106-080902	BOLT, M8X 90 PLATED	1	1						
10	1	26106-081202	BOLT, M8X120 PLATED	26	26						
11	1	26116-081902	BOLT, M8X190 PLATED	2	2						
12	1	119581-34810	GUIDE, DIPSTICK	1	1						
13	1	119171-34820	GUIDE, DIPSTICK	1	1						
14	1	119574-34861	DIPSTICK, OIL	1	1						
15	1	119593-34870	DIPSTICK, OIL	1	1						
16	1	24341-000100	O-RING, 1AS10.0	1	1						
17	1	26106-080162	BOLT, M8X 16 PLATED	1	1						
18	1	26106-080752	BOLT, M8X 75 PLATED	1	1						

N:Old $\xleftarrow[\text{No}]{\text{Yes}}$ New, Q:Old $\xleftarrow[\text{Yes}]{\text{No}}$ New, R:Old $\xleftarrow[\text{Yes}]{\text{Yes}}$ New, S:Old $\xleftarrow[\text{No}]{\text{No}}$ New, W:Add, Z:Discontinued, F:Interchangeable by set, K:Q'ty Change

Copyright (C) 2017 YANMAR CO., LTD. All RightsReserved.

Fig.5. BREATHER

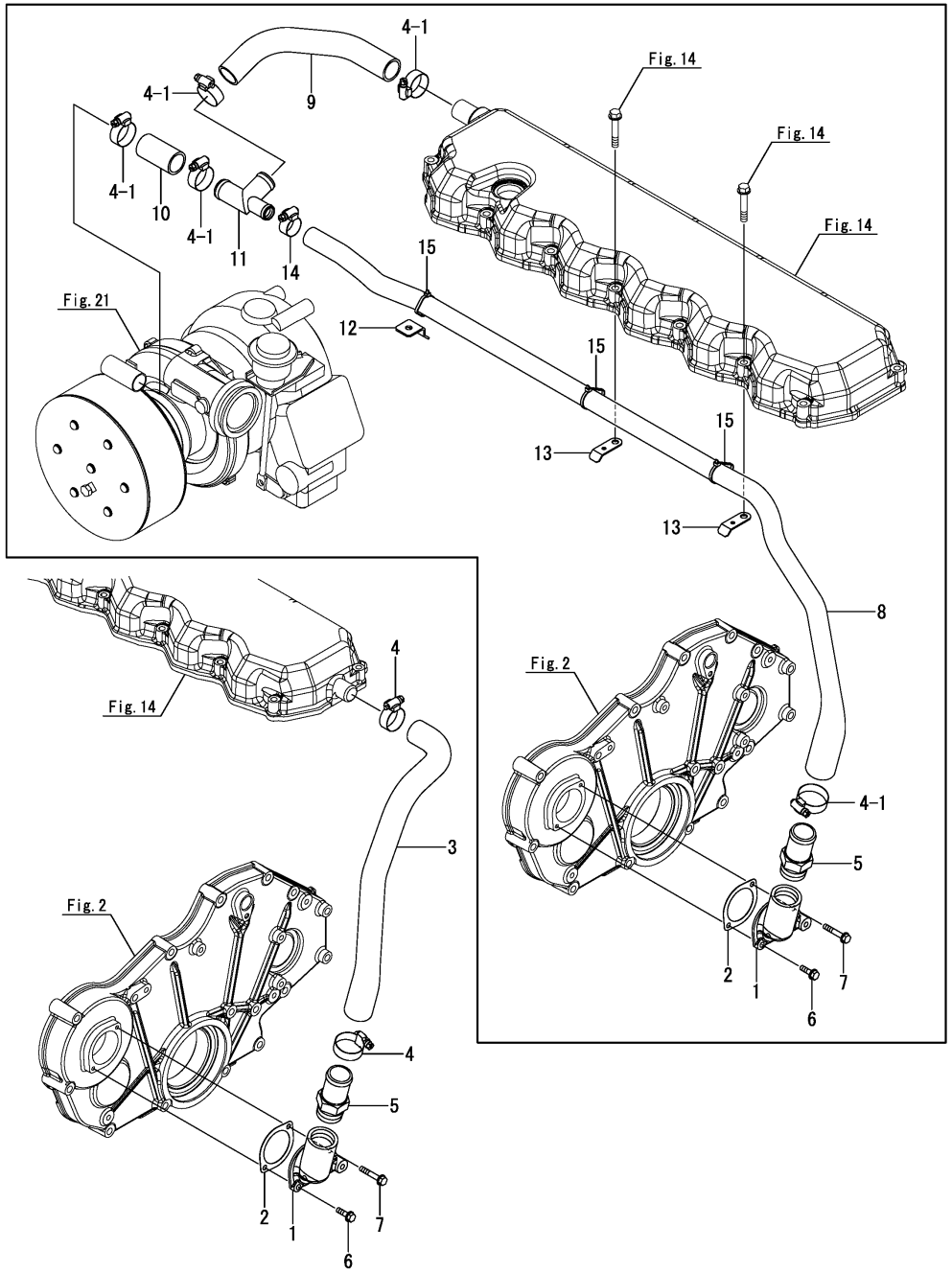

(A)=6LY440 (D)=
(B)=6LY400 (E)=
(C)= (F)=

No.	Lev.	Parts No.	Description	Q'ty (A)	(B)	(C)	(D)	(E)	(F)	I	R
1	1	119593-03040	COVER, BREATHER	1	1						
2	1	124411-03051	GASKET	1	1						
3	1	119581-03100	HOSE, BREATHER	1	1					Z	
	(A=E/#1716)	(B=E/#1740)									
4	1	119172-48350	CLIP, HOSE 35	2	2						
4-1	1	119172-48350	CLIP, HOSE 35	5	5					K	
	(A=E/#1716)	(B=E/#1740)									
5	1	124699-49100	JOINT	1	1						
6	1	26106-060202	BOLT, M6X 20 PLATED	1	1						
7	1	26106-060352	BOLT, M6X 35 PLATED	1	1						
8	1	119581-03110	HOSE, BREATHER	1	1					W	
	(A=E/#1716)	(B=E/#1740)									
8-1	1	119581-03111	HOSE, BREATHER	1	1					N	
	(A=E/#1812)	(B=E/#1811)									
9	1	119581-03120	HOSE, BREATHER	1	1					W	
	(A=E/#1716)	(B=E/#1740)									
10	1	119581-03130	HOSE, BREATHER	1	1					W	
	(A=E/#1716)	(B=E/#1740)									
11	1	119581-03140	JOINT, HOSE	1	1					W	
	(A=E/#1716)	(B=E/#1740)									
12	1	119581-03150	SUPPORT, HOSE	1	1					W	
	(A=E/#1716)	(B=E/#1740)									
13	1	119581-03180	SUPPORT, HOSE	2	2					W	
	(A=E/#1716)	(B=E/#1740)									
14	1	119172-48280	CLIP, HOSE 28	1	1					W	
	(A=E/#1716)	(B=E/#1740)									
15	1	129C00-91200	BAND	3	3					W	
	(A=E/#1716)	(B=E/#1740)									

N:Old $\overset{\text{Yes}}{\underset{\text{No}}{\leftrightarrow}}$ New, Q:Old $\overset{\text{No}}{\underset{\text{Yes}}{\leftrightarrow}}$ New, R:Old $\overset{\text{Yes}}{\underset{\text{Yes}}{\leftrightarrow}}$ New, S:Old $\overset{\text{No}}{\underset{\text{No}}{\leftrightarrow}}$ New, W:Add, Z:Discontinued, F:Interchangeable by set, K:Q'ty Change

Copyright (C) 2017 YANMAR CO., LTD. All RightsReserved.

Fig.61. (5A)BREATHER(SOLAS)(OPTIONAL)

(A)=6LY440
(B)=6LY400
(C)=
(D)=
(E)=
(F)=

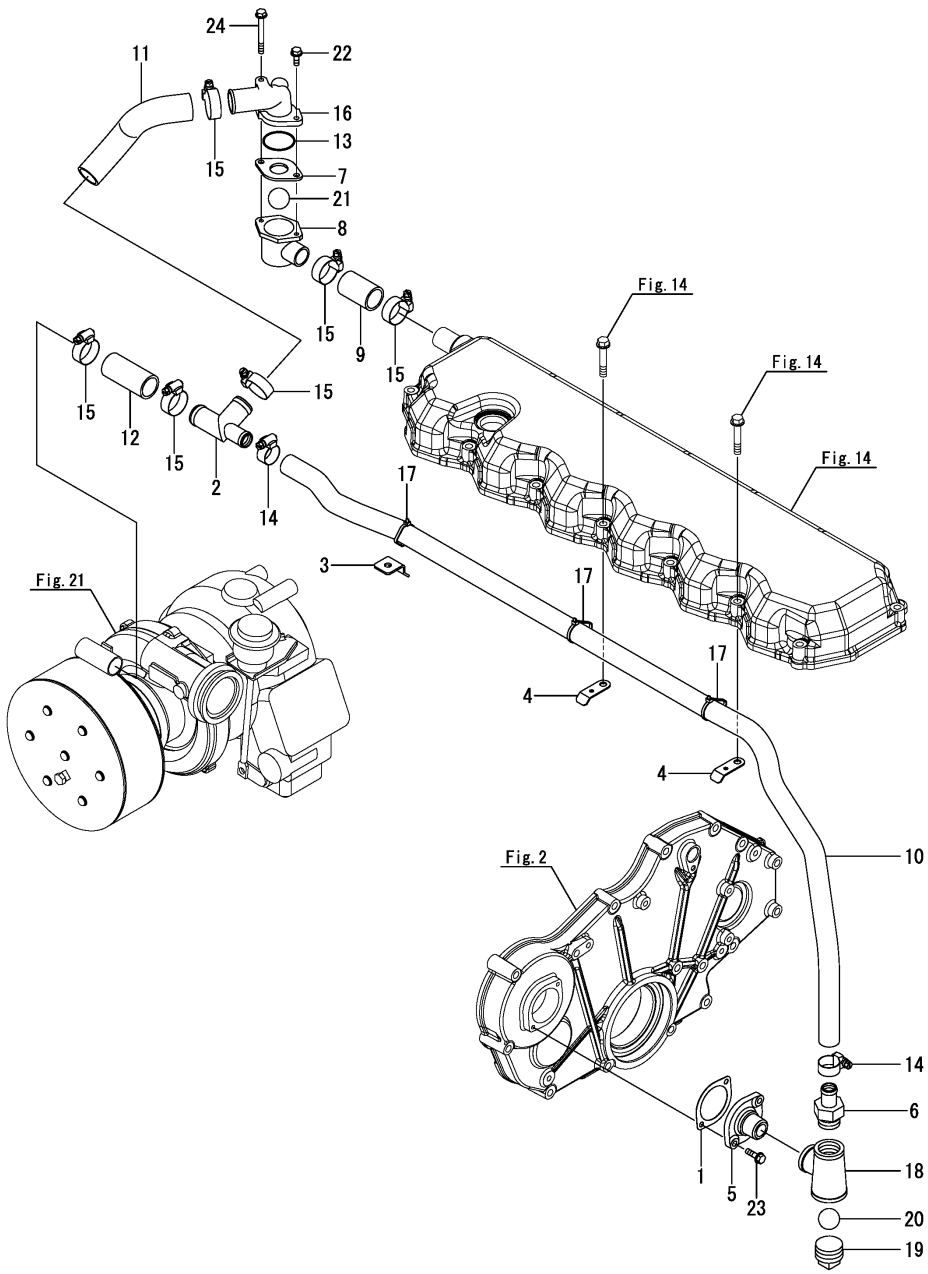

No.	Lev.	Parts No.	Description	Q'ty (A)	(B)	(C)	(D)	(E)	(F)	I	R
1	1	124411-03051	GASKET	1	1						
2	1	119581-03140	JOINT, HOSE	1	1						
3	1	119581-03150	SUPPORT, HOSE	1	1						
4	1	119581-03180	SUPPORT, HOSE	2	2						
5	1	119581-03310	BREATHER, GEAR CASE	1	1						
6	1	119581-03320	JOINT, BREATHER	1	1						
7	1	119578-03370	PLATE,CHECK VALVE	1	1						
8	1	119578-03380	BODY,CHECK VALVE	1	1						
9	1	119578-03400	HOSE,BONNET OUT	1	1						
10	1	119581-03430	HOSE, BREATHER	1	1						
11	1	119581-03460	HOSE, BREATHER	1	1						
12	1	119581-03470	HOSE, BREATHER	1	1						
13	1	119209-42140	O-RING, G 35	1	1						
14	1	119172-48280	CLIP, HOSE 28	2	2						
15	1	119172-48350	CLIP, HOSE 35	6	6						
16	1	119256-49531	COVER, THERMOSTAT	1	1						
17	1	129C00-91200	BAND	3	3						
18	1	23123-100606	JOINT, 1X3/4X3/4	1	1						
19	1	23171-100000	PLUG, R1	1	1						
20	1	24190-320001	BALL, STEEL 1	1	1						
21	1	24190-320001	BALL, STEEL 1	1	1						
22	1	26106-060162	BOLT, M6X 16 PLATED	1	1						
23	1	26106-060202	BOLT, M6X 20 PLATED	2	2						
24	1	26106-060552	BOLT, M6X 55 PLATED	1	1						

N:Old $\overset{\text{Yes}}{\underset{\text{No}}{\leftrightarrows}}$ New, Q:Old $\overset{\text{No}}{\underset{\text{Yes}}{\leftrightarrows}}$ New, R:Old $\overset{\text{Yes}}{\underset{\text{Yes}}{\leftrightarrows}}$ New, S:Old $\overset{\text{No}}{\underset{\text{No}}{\leftrightarrows}}$ New, W:Add, Z:Discontinued, F:Interchangeable by set, K:Q'ty Change

Copyright (C) 2017 YANMAR CO., LTD. All RightsReserved.

Fig.6. BREATHER(MIST RETURN)

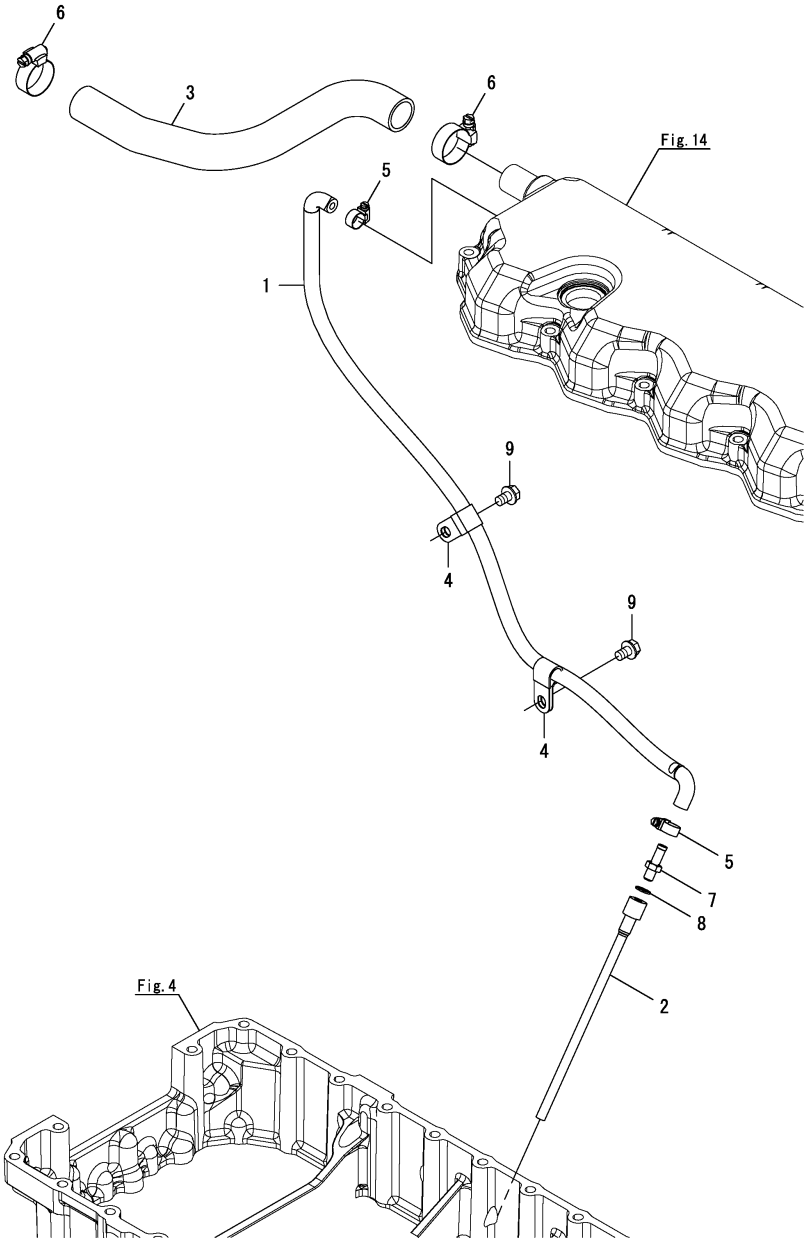

(A)=6LY440 (D)=
(B)=6LY400 (E)=
(C)= (F)=

No.	Lev.	Parts No.	Description	Q'ty (A)	(B)	(C)	(D)	(E)	(F)	I	R
1	1	119581-03170	HOSE,BREATHER RETURN	1	1						
2	1	119578-03190	JOINT	1	1						
3	1	119581-03230	HOSE, BREATHER	1	1					Z	1
	(A=E/#1716)	(B=E/#1740)									
4	1	119593-39450	RETAINER, PIPE	2	2						
5	1	119172-48130	CLIP, HOSE 13	2	2						
6	1	119172-48280	CLIP, HOSE 28	2	2					Z	1
	(A=E/#1716)	(B=E/#1740)									
7	1	114385-99151	JOINT	1	1						
8	1	22190-080002	WASHER, SEAL 8	1	1						
9	1	26106-080122	BOLT, M8X 12 PLATED	2	2						

Remarks
(1)New parts are shown in Fig.5.

N:Old $\xleftarrow[\text{No}]{\text{Yes}}$ New, Q:Old $\xleftarrow[\text{Yes}]{\text{No}}$ New, R:Old $\xleftarrow[\text{Yes}]{\text{Yes}}$ New, S:Old $\xleftarrow[\text{No}]{\text{No}}$ New, W:Add, Z:Discontinued, F:Interchangeable by set, K:Q'ty Change

Copyright (C) 2017 YANMAR CO., LTD. All RightsReserved.

Fig.7. MOUNTING FOOT

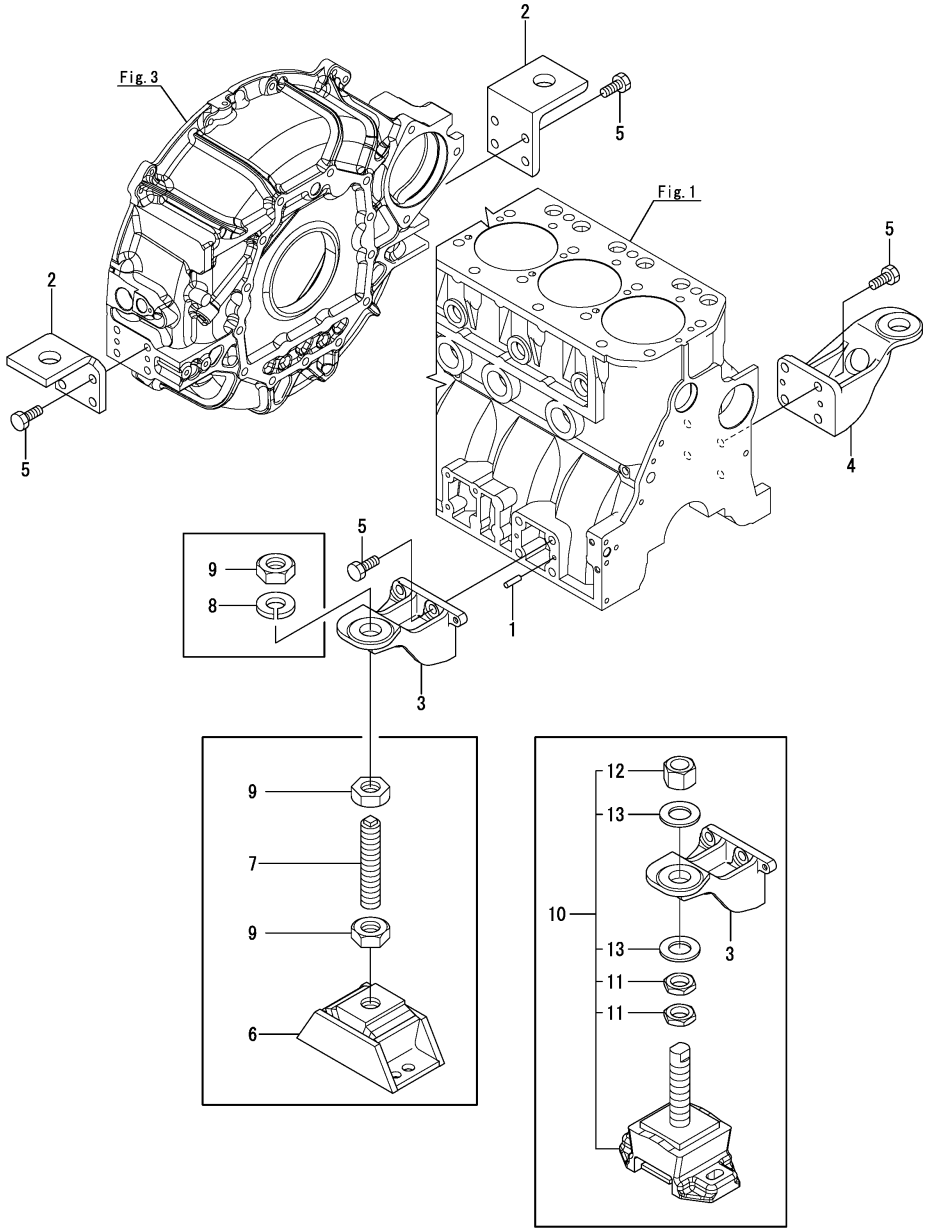

(A)=6LY440
(B)=6LY400
(C)=
(D)=
(E)=
(F)=

No.	Lev.	Parts No.	Description	Q'ty (A)	(B)	(C)	(D)	(E)	(F)	I	R
1	1	129100-01580	PIN, PARALLEL 8X16	4	4						
2	1	119574-08231	FOOT, MOUNTING	2	2						
3	1	119574-08202	FOOT, MOUNTING	1	1						
4	1	119574-08212	FOOT, MOUNTING	1	1						
5	1	26116-120302	BOLT, M12X 30 PLATED	16	16						
6	1	127495-08320	MOUNT, FLEXIBLE 600	4	4						1
7	1	119593-08400	BOLT, SQUARE	4	4						1
8	1	22217-270000	WASHER, SPRING 27	4	4						1
9	1	26776-270002	NUT, LOCK M27	12	12						1
10	1	119773-08300	MOUNTING, FLEXIBLE	4	4						1
11	2	119773-08330	NUT, ABSORBER	8	8						1
12	2	119773-08340	NUT	4	4						1
13	2	119773-08350	WASHER	8	8						1

Remarks
(1)Optional parts.

N:Old $\xleftrightarrow[\text{No}]{\text{Yes}}$ New, Q:Old $\xleftrightarrow[\text{Yes}]{\text{No}}$ New, R:Old $\xleftrightarrow[\text{Yes}]{\text{Yes}}$ New, S:Old $\xleftrightarrow[\text{No}]{\text{No}}$ New, W:Add, Z:Discontinued, F:Interchangeable by set, K:Q'ty Change

Copyright (C) 2017 YANMAR CO., LTD. All RightsReserved.

Fig.8. LABEL

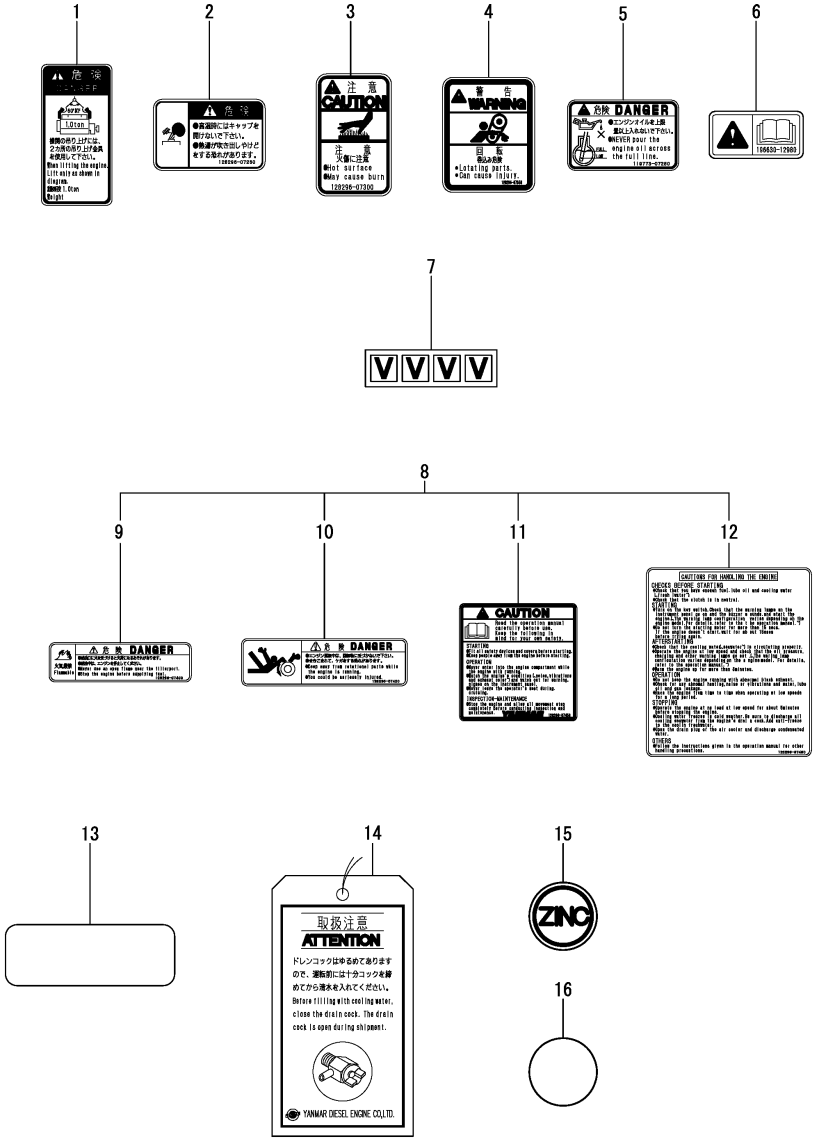

(A)=6LY440
(B)=6LY400
(C)=
(D)=
(E)=
(F)=

No.	Lev.	Parts No.	Description	Q'ty (A)	(B)	(C)	(D)	(E)	(F)	I	R
1	1	120324-07240	LABEL, DANGER	1	1						
2	1	128296-07260	LABEL, DANGER	1	1						
3	1	128296-07300	LABEL, DANGER	2	2						
4	1	128296-07350	LABEL, DANGER	1	1						
5	1	119773-07280	LABEL, DANGER	1	1						
6	1	196630-12980	LABEL, CAUTION	1	1						
7	1	119574-07450	LABEL	1	1						
8	1	128296-07190	LABEL,LOOSE PARTS	1	1						1
9	2	128296-07400	LABEL, DANGER	2	2						1
10	2	128296-07420	LABEL, DANGER	1	1						1
11	2	128296-07450	LABEL, CAUTION	1	1						1
12	2	128296-07460	LABEL, CAUTION	1	1						1
13	1	128171-07150	LABEL	1	1						
14	1	123682-07852	LABEL, CAUTION	1	1					Z	
	(A=*2017.09.)	(B=*2017.09.)									
15	1	119574-07400	LABEL	5	5						
16	1	119595-07360	LABEL	1	1						

Remarks
(1)Loose parts.

N:Old $\xleftarrow[\text{No}]{\text{Yes}}$ New, Q:Old $\xleftarrow[\text{Yes}]{\text{No}}$ New, R:Old $\xleftarrow[\text{Yes}]{\text{Yes}}$ New, S:Old $\xleftarrow[\text{No}]{\text{No}}$ New, W:Add, Z:Discontinued, F:Interchangeable by set, K:Q'ty Change

Copyright (C) 2017 YANMAR CO., LTD. All RightsReserved.

Fig.9. COVER(TOP)

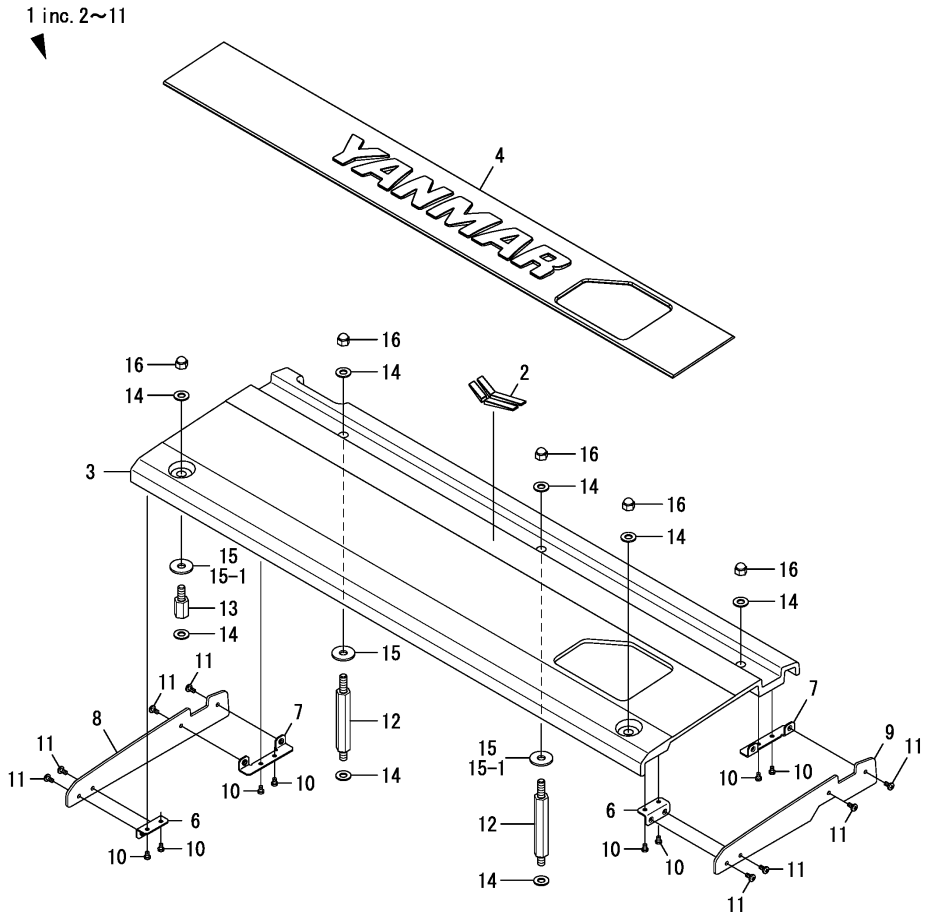

(A)=6LY440 (D)=
(B)=6LY400 (E)=
(C)= (F)=

No.	Lev.	Parts No.	Description	Q'ty (A)	(B)	(C)	(D)	(E)	(F)	I	R
1	1	119581-09300	COVER,TOP	1	1						
2	2	119581-07510	EMBLEM,FY S71	1	1						
3	2	119581-09400	COVER,TOP BASE	1	1						
4	2	119581-09421	COVER,TOP PLATE	1	1						
6	2	119581-09440	STAGE,CAP A	2	2						
7	2	119581-09450	STAGE,CAP B	2	2						
8	2	119581-09460	COVER,TOP CAP F	1	1						
9	2	119581-09470	COVER,TOP CAP R	1	1						
10	2	22857-400060	SCREW, 4X 6	8	8						
11	2	26587-040082	SCREW, M4X 8	8	8						
12	1	119581-09800	BOLT,SPACER COV A	2	2						
13	1	119581-09810	BOLT,SPACER COV B	1	1						
14	1	22137-080000	WASHER, 8	8	8						
15	1	22157-080000	WASHER, 8	3	3						
15-1	1	22157-080000	WASHER, 8	2	2					K	
	(A=E/#1716)	(B=E/#1740)									
16	1	26658-080002	NUT, CAP M8	5	5						

N:Old ←Yes/No→ New, Q:Old ←No/Yes→ New, R:Old ←Yes/Yes→ New, S:Old ←No/No→ New, W:Add, Z:Discontinued, F:Interchangeable by set, K:Q'ty Change

Copyright (C) 2017 YANMAR CO., LTD. All RightsReserved.

Fig.10. COVER(BELT)(WITHOUT 2ND GENERATOR SPEC.)

(A)=6LY440
(B)=6LY400
(C)=
(D)=
(E)=
(F)=

No.	Lev.	Parts No.	Description	Q'ty (A)	(B)	(C)	(D)	(E)	(F)	I	R
1	1	119581-09502	COVER, BELT	1	1						
2	1	119581-09510	STAGE,BELT COVER	1	1						
3	1	119581-09820	BOLT,SPACER COV C	1	1						
4	1	119581-09850	BOLT,SPACER COV F	1	1						
5	1	105100-55501	RUBBER, CUSHION	4	4						
6	1	105100-55540	COLLAR	4	4						
7	1	22137-080000	WASHER, 8	2	2						
8	1	22157-080000	WASHER, 8	2	2						
9	1	26366-080002	NUT, M8	4	4						

N:Old $\xleftrightarrow[\text{No}]{\text{Yes}}$ New, Q:Old $\xleftrightarrow[\text{Yes}]{\text{No}}$ New, R:Old $\xleftrightarrow[\text{Yes}]{\text{Yes}}$ New, S:Old $\xleftrightarrow[\text{No}]{\text{No}}$ New, W:Add, Z:Discontinued, F:Interchangeable by set, K:Q'ty Change

Copyright (C) 2017 YANMAR CO., LTD. All RightsReserved.

Fig.60. (10A)COVER(BELT)(WITH 2ND GENERATOR SPEC.)

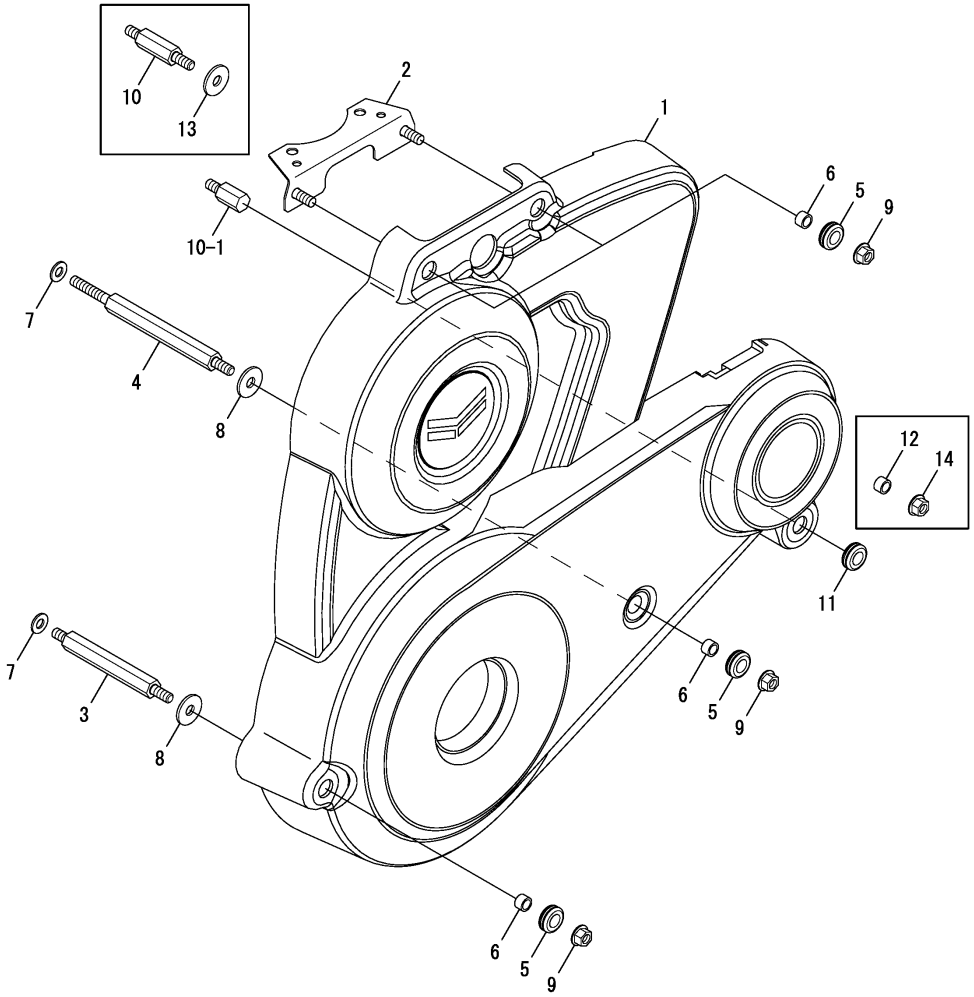

(A)=6LY440 (D)=
(B)=6LY400 (E)=
(C)= (F)=

No.	Lev.	Parts No.	Description	Q'ty (A)	(B)	(C)	(D)	(E)	(F)	I	R
1	1	119581-09530	COVER,BELT 2ND ALT	1	1						
2	1	119581-09510	STAGE,BELT COVER	1	1						
3	1	119581-09820	BOLT,SPACER COV C	1	1						
4	1	119581-09860	BOLT,SPACER COV G	1	1						
5	1	105100-55501	RUBBER, CUSHION	4	4						
6	1	105100-55540	COLLAR	4	4						
7	1	22137-080000	WASHER, 8	2	2						
8	1	22157-080000	WASHER, 8	2	2						
9	1	26366-080002	NUT, M8	4	4						
10	1	119581-09870	BOLT,SPACER COV H	1	1						
10-1	1	119581-09871	BOLT, STOP COV 2ND	1	1					N	
	(A=E/#2413)	(B=*2017.03.)									
11	1	105100-55501	RUBBER, CUSHION	1	1						
12	1	105100-55540	COLLAR	1	1					Z	
	(A=E/#2413)	(B=*2017.03.)									
13	1	22157-080000	WASHER, 8	1	1					Z	
	(A=E/#2413)	(B=*2017.03.)									
14	1	26366-080002	NUT, M8	1	1					Z	
	(A=E/#2413)	(B=*2017.03.)									

N:Old $\xleftrightarrow[\text{No}]{\text{Yes}}$ New, Q:Old $\xleftrightarrow[\text{Yes}]{\text{No}}$ New, R:Old $\xleftrightarrow[\text{Yes}]{\text{Yes}}$ New, S:Old $\xleftrightarrow[\text{No}]{\text{No}}$ New, W:Add, Z:Discontinued, F:Interchangeable by set, K:Q'ty Change

Copyright (C) 2017 YANMAR CO., LTD. All RightsReserved.

Fig.11. COVER(FUSE)

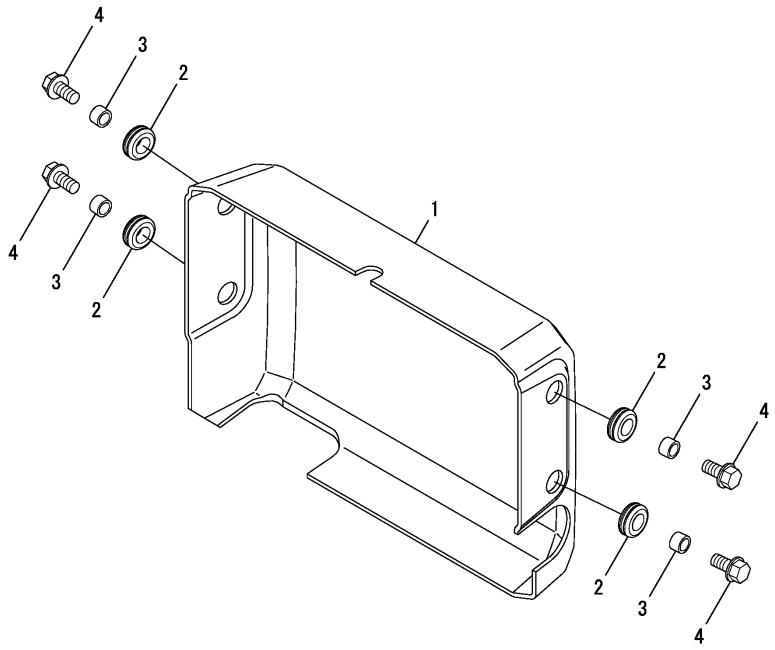

(A)=6LY440
(B)=6LY400
(C)=
(D)=
(E)=
(F)=

No.	Lev.	Parts No.	Description	Q'ty (A)	(B)	(C)	(D)	(E)	(F)	I	R
1	1	119581-09560	COVER,FUSE 2POLE	1	1						
2	1	105100-55501	RUBBER, CUSHION	4	4						
3	1	105100-55540	COLLAR	4	4						
4	1	26106-080162	BOLT, M8X 16 PLATED	4	4						

N:Old $\xleftrightarrow[\text{No}]{\text{Yes}}$ New, Q:Old $\xleftrightarrow[\text{Yes}]{\text{No}}$ New, R:Old $\xleftrightarrow[\text{Yes}]{\text{Yes}}$ New, S:Old $\xleftrightarrow[\text{No}]{\text{No}}$ New, W:Add, Z:Discontinued, F:Interchangeable by set, K:Q'ty Change

Copyright (C) 2017 YANMAR CO., LTD. All RightsReserved.

Fig.12. COVER(ECU)

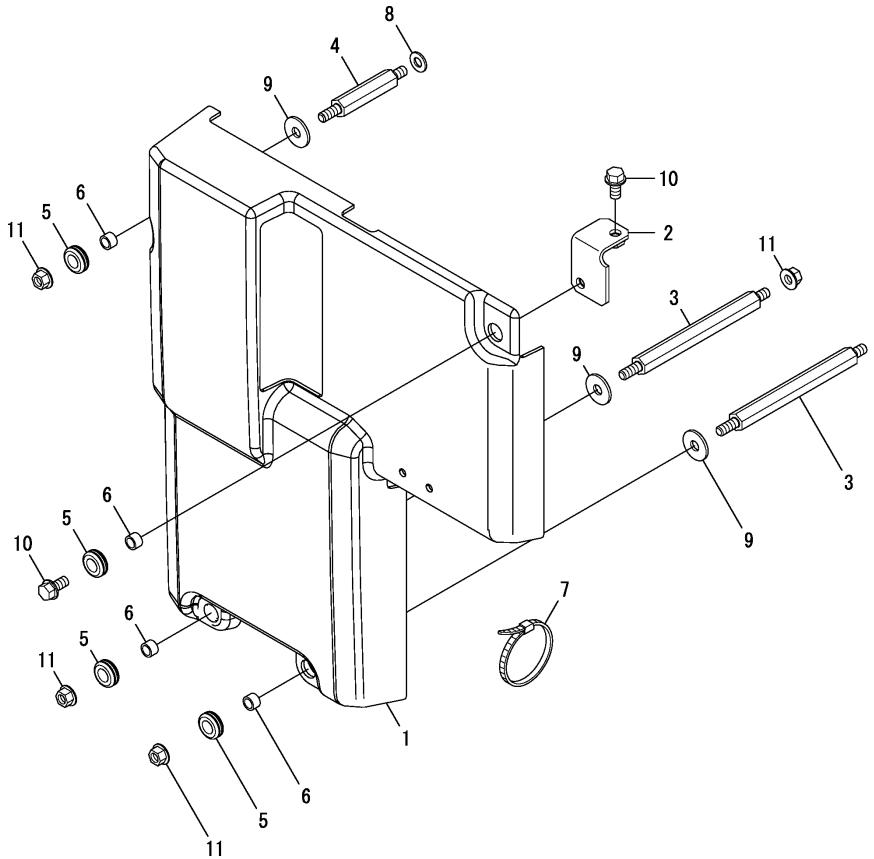

(A)=6LY440
(B)=6LY400
(C)=
(D)=
(E)=
(F)=

No.	Lev.	Parts No.	Description	Q'ty (A)	(B)	(C)	(D)	(E)	(F)	I	R
1	1	119581-09601	COVER,ECU	1	1						
2	1	119581-09610	BRACKET, ECU COVER	1	1						
3	1	119581-09830	BOLT,SPACER COV D	2	2						
4	1	119581-09840	BOLT,SPACER COV E	1	1						
5	1	105100-55501	RUBBER, CUSHION	4	4						
6	1	105100-55540	COLLAR	4	4						
7	1	119581-77950	BAND, CLAMP	2	2						
8	1	22137-080000	WASHER, 8	1	1						
9	1	22157-080000	WASHER, 8	3	3						
10	1	26106-080162	BOLT, M8X 16 PLATED	2	2						
11	1	26366-080002	NUT, M8	4	4						

N:Old $\overset{\text{Yes}}{\underset{\text{No}}{\leftrightarrows}}$ New, Q:Old $\overset{\text{No}}{\underset{\text{Yes}}{\leftrightarrows}}$ New, R:Old $\overset{\text{Yes}}{\underset{\text{Yes}}{\leftrightarrows}}$ New, S:Old $\overset{\text{No}}{\underset{\text{No}}{\leftrightarrows}}$ New, W:Add, Z:Discontinued, F:Interchangeable by set, K:Q'ty Change

Copyright (C) 2017 YANMAR CO., LTD. All RightsReserved.

Fig.13. CYLINDER HEAD & ROCKER ARM

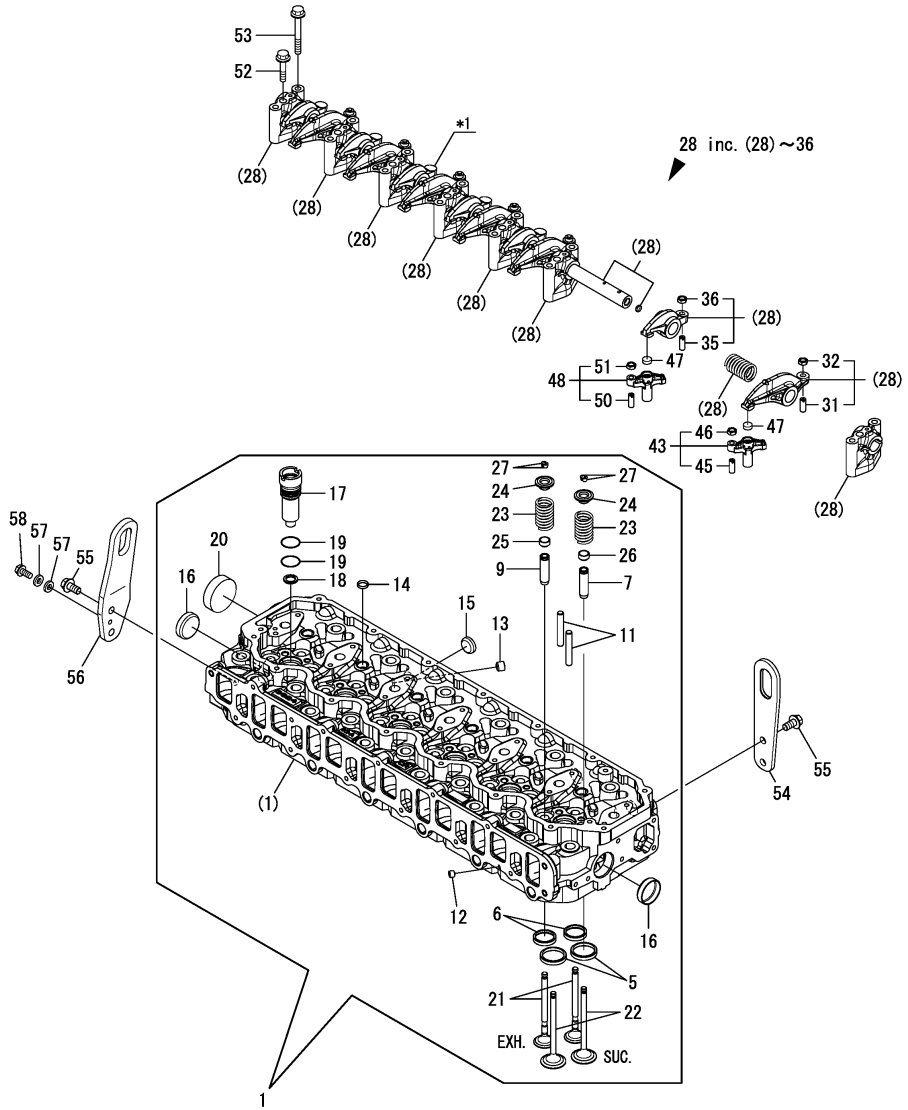

(A)=6LY440 (D)=
(B)=6LY400 (E)=
(C)= (F)=

No.	Lev.	Parts No.	Description	Q'ty (A)	(B)	(C)	(D)	(E)	(F)	I	R
1	1	719581-11100	HEAD ASSY, CYLINDER	1	1						
1-1	1	719581-11101	HEAD ASSY, CYLINDER	1	1					R	
	(A=E/#2264)	(B=E/#2262)									
5	3	119578-11080	SEAT, VALVE	12	12						
6	3	119578-11090	SEAT, VALVE	12	12						
7	3	120130-11860	GUIDE, VALVE	12	12						1
9	3	129150-11810	GUIDE, VALVE	12	12						1
11	3	119578-11520	GUIDE, BRIDGE	12	12						
12	3	23876-010000	PLUG, R01	7	7						
13	3	23876-020000	PLUG, R02	6	6						
14	3	27241-160000	PLUG, 16	12	12						
15	3	27241-250000	PLUG, 25	6	6						
16	3	27241-400000	PLUG, 40	2	2						
17	3	119581-11840	SLEEVE, INJECTOR	6	6						
18	3	119581-11870	GASKET,INJ. SLEEVE	6	6						
19	3	24326-000250	O-RING, 4DG25.0	12	12						
20	3	119581-11150	PLUG	1	1						
20-1	3	27241-450000	PLUG, 45	1	1					N	
	(A=E/#2264)	(B=E/#2262)									
21	2	119578-11110	VALVE, EXHAUST	12	12						
22	2	119578-11461	VALVE, SUCTION	12	12						
23	2	119578-11130	SPRING, VALVE	24	24						
24	2	119578-11180	RETAINER, SPRING	24	24						
25	2	121400-11340	SEAL, VALVE STEM	12	12						
26	2	124460-11340	SEAL, VALVE STEM	12	12						
27	2	27310-080001	COTTER, 8	24	24						
28	1	119581-11200	ARM ASSY, ROCKER	1	1						
31	3	124699-11230	SCREW, VALVE ADJUST	6	6						
32	3	129150-11750	NUT, M8	6	6						
35	3	124699-11230	SCREW, VALVE ADJUST	6	6						
36	3	129150-11750	NUT, M8	6	6						
43	1	119581-11500	BRIDGE ASSY, VALVE S	6	6						
45	2	120320-11520	SCREW, VALVE	6	6						
46	2	26756-080002	NUT, LOCK M8	6	6						
47	1	119578-11550	SEAT	12	12						
48	1	119581-11520	BRIDGE ASSY, VALVE E	6	6						
50	2	120320-11520	SCREW, VALVE	6	6						
51	2	26756-080002	NUT, LOCK M8	6	6						
52	1	26106-080402	BOLT, M8X 40 PLATED	7	7						
53	1	26106-080702	BOLT, M8X 70 PLATED	14	14						
54	1	119593-07220	LIFTER,ENGINE	1	1						
55	1	144626-54572	BOLT, REAMER	4	4						
56	1	119581-07200	LIFTER, REAR	1	1						
57	1	119581-07250	WASHER	2	2						
58	1	26106-080182	BOLT, M8X 18 PLATED	1	1						

Remarks
*1. On a guarantee of quality, this parts shall not be sold.
(1)Spare parts.

N:Old $\xleftrightarrow[\text{No}]{\text{Yes}}$ New, Q:Old $\xleftrightarrow[\text{Yes}]{\text{No}}$ New, R:Old $\xleftrightarrow[\text{Yes}]{\text{Yes}}$ New, S:Old $\xleftrightarrow[\text{No}]{\text{No}}$ New, W:Add, Z:Discontinued, F:Interchangeable by set, K:Q'ty Change

Copyright (C) 2017 YANMAR CO., LTD. All RightsReserved.

Fig.14. BONNET

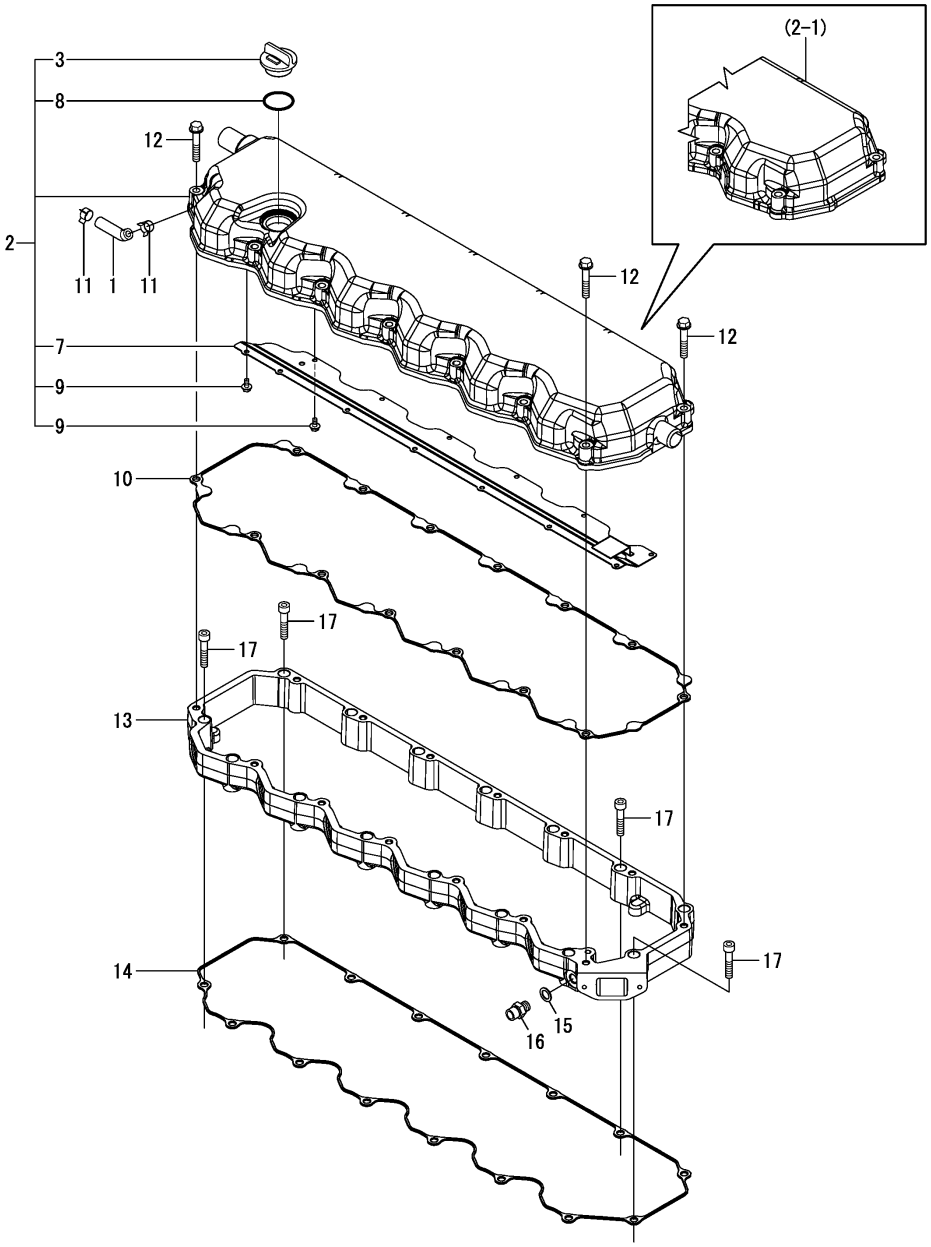

(A)=6LY440 (D)=
(B)=6LY400 (E)=
(C)= (F)=

No.	Lev.	Parts No.	Description	Q'ty (A)	(B)	(C)	(D)	(E)	(F)	I	R
1	1	119581-03160	HOSE,BONNET	1	1						
2	1	119581-11400	BONNET ASSY	1	1						
2-1	1	119581-11401	BONNET ASSY	1	1					S	
2-2	(A=E/#1716) 1 (A=E/#1779)	(B=E/#1740) 119581-11402 (B=E/#1791)	BONNET ASSY	1	1					N	
3	2	124160-01751	CAP, FILLER	1	1						
7	2	119581-11420	PLATE, BAFFLE	1	1						
8	2	24311-000320	O-RING, 1AP32.0	1	1						
9	2	26106-050102	BOLT, M5X 10 PLATED	13	13						
10	1	119581-11431	PACKING, BONNET	1	1						
11	1	23080-012000	CLAMP, 12	2	2						
12	1	26106-080452	BOLT, M8X 45 PLATED	14	14						
13	1	119581-11301	HOUSING, ROCKER ARM	1	1						
14	1	119581-11380	PACKING, R.A.HOUSING	1	1						
15	1	22190-120006	WASHER, SEAL 12	1	1						
16	1	23831-060000	UNION, 6	1	1						
17	1	26450-080402	BOLT, M8X 40	15	15						

N:Old $\xleftrightarrow[\text{No}]{\text{Yes}}$ New, Q:Old $\xleftrightarrow[\text{Yes}]{\text{No}}$ New, R:Old $\xleftrightarrow[\text{Yes}]{\text{Yes}}$ New, S:Old $\xleftrightarrow[\text{No}]{\text{No}}$ New, W:Add, Z:Discontinued, F:Interchangeable by set, K:Q'ty Change

Copyright (C) 2017 YANMAR CO., LTD. All RightsReserved.

Fig.15. HARNESS GUIDE

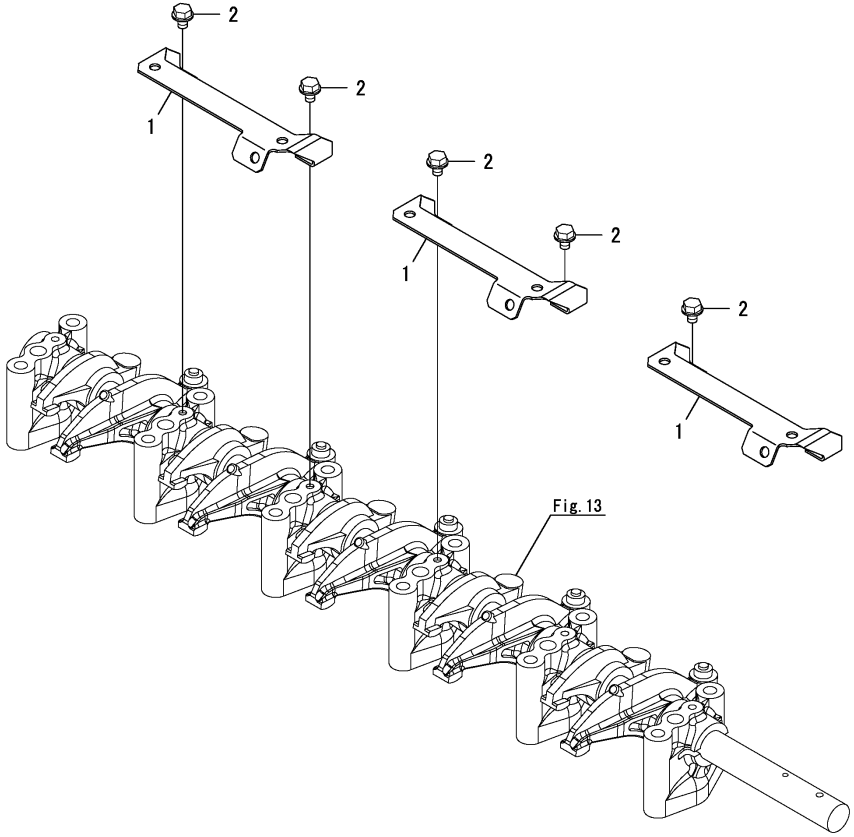

(A)=6LY440
(B)=6LY400
(C)=
(D)=
(E)=
(F)=

No.	Lev.	Parts No.	Description	Q'ty (A)	(B)	(C)	(D)	(E)	(F)	I	R
1	1	119581-77010	GUIDE, HARNESS	3	3						
2	1	26106-060082	BOLT, M6X 8 PLATED	5	5						

N:Old $\xleftarrow[\text{No}]{\text{Yes}}$ New, Q:Old $\xleftarrow[\text{Yes}]{\text{No}}$ New, R:Old $\xleftarrow[\text{Yes}]{\text{Yes}}$ New, S:Old $\xleftarrow[\text{No}]{\text{No}}$ New, W:Add, Z:Discontinued, F:Interchangeable by set, K:Q'ty Change

Copyright (C) 2017 YANMAR CO., LTD. All RightsReserved.

Fig.16. SUCTION MANIFOLD

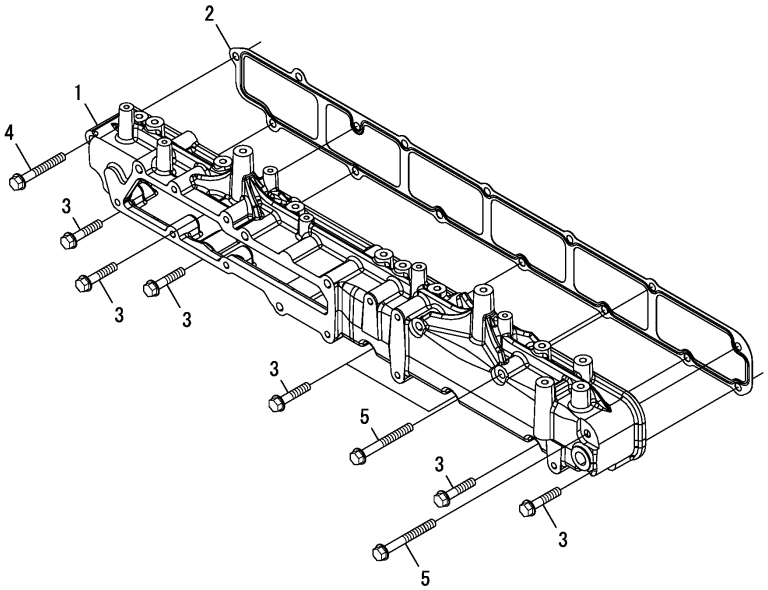

(A)=6LY440
(B)=6LY400
(C)=
(D)=
(E)=
(F)=

No.	Lev.	Parts No.	Description	Q'ty (A)	(B)	(C)	(D)	(E)	(F)	I	R
1	1	119581-12110	MANIFOLD, AIR INTAKE	1	1						
2	1	119581-12130	GASKET,INT. MANIFOLD	1	1						
3	1	26106-080402	BOLT, M8X 40 PLATED	7	7						
4	1	26106-080602	BOLT, M8X 60 PLATED	1	1						
5	1	26106-080702	BOLT, M8X 70 PLATED	3	3						

N:Old $\xleftrightarrow[\text{No}]{\text{Yes}}$ New, Q:Old $\xleftrightarrow[\text{Yes}]{\text{No}}$ New, R:Old $\xleftrightarrow[\text{Yes}]{\text{Yes}}$ New, S:Old $\xleftrightarrow[\text{No}]{\text{No}}$ New, W:Add, Z:Discontinued, F:Interchangeable by set, K:Q'ty Change

Copyright (C) 2017 YANMAR CO., LTD. All RightsReserved.

Fig.17. EXHAUST MANIFOLD

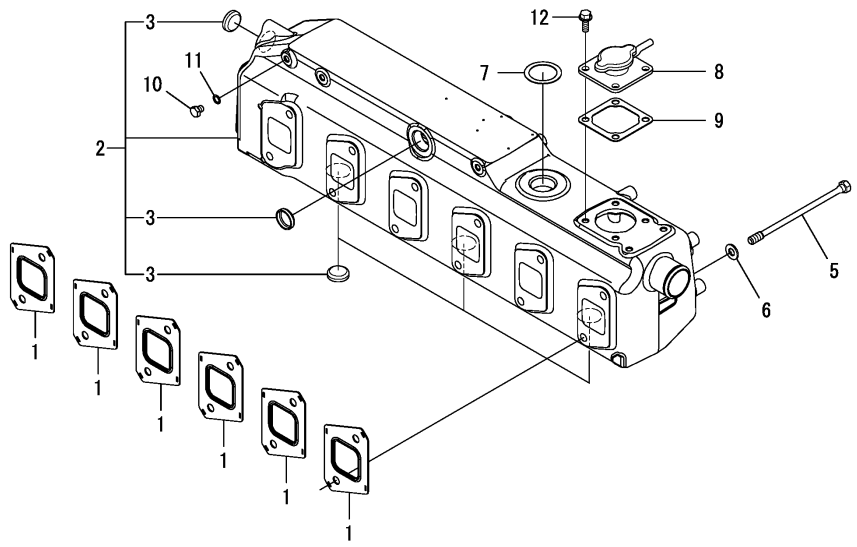

(A)=6LY440
(B)=6LY400
(C)=
(D)=
(E)=
(F)=

No.	Lev.	Parts No.	Description	Q'ty (A)	(B)	(C)	(D)	(E)	(F)	I	R
1	1	119578-13200	GASKET	6	6						
2	1	119581-13200	MANIFOLD ASSY, EXH.	1	1						
3	2	119773-13160	PLUG, 28	5	5						
5	1	119581-13230	BOLT, M10X170	12	12						
6	1	22137-100000	WASHER, 10	12	12						
7	1	23414-360000	GASKET, 36X1.0	1	1						
8	1	129171-44600	FILLER ASSY	1	1						
9	1	120445-44640	GASKET	1	1						
10	1	124790-55770	PLUG, 8	1	1						
11	1	23414-080012	GASKET, 8X1.0	1	1						
12	1	26106-080142	BOLT, M8X 14 PLATED	4	4						

N:Old $\overset{\text{Yes}}{\underset{\text{No}}{\leftrightarrows}}$ New, Q:Old $\overset{\text{No}}{\underset{\text{Yes}}{\leftrightarrows}}$ New, R:Old $\overset{\text{Yes}}{\underset{\text{Yes}}{\leftrightarrows}}$ New, S:Old $\overset{\text{No}}{\underset{\text{No}}{\leftrightarrows}}$ New, W:Add, Z:Discontinued, F:Interchangeable by set, K:Q'ty Change

Copyright (C) 2017 YANMAR CO., LTD. All RightsReserved.

Fig.18. FILLER(BY-PASS)(V-DRIVE SPEC.)

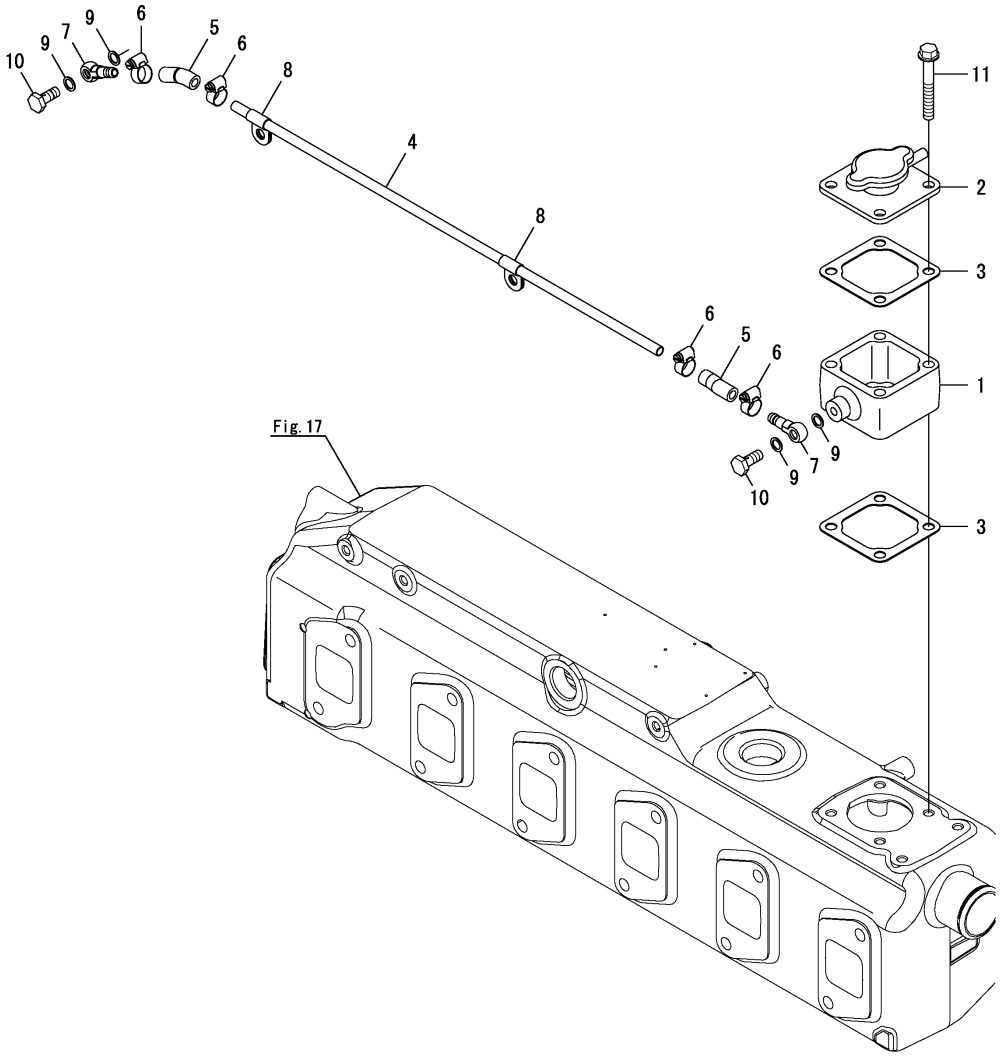

(A)=6LY440
(B)=6LY400
(C)=
(D)=
(E)=
(F)=

No.	Lev.	Parts No.	Description	Q'ty (A)	(B)	(C)	(D)	(E)	(F)	I	R
1	1	119595-44600	SPACER	1	1						
2	1	129171-44600	FILLER ASSY	1	1						
3	1	120445-44640	GASKET	2	2						
4	1	119595-44700	PIPE, WATER	1	1						
5	1	119581-44800	HOSE, CW	2	2						
6	1	119172-48130	CLIP, HOSE 13	4	4						
7	1	104264-59030	JOINT, PIPE 8	2	2						
8	1	23297-080081	CLAMP, A8X 8	2	2						
9	1	23414-080012	GASKET, 8X1.0	4	4						
10	1	23857-030000	BOLT, JOINT 3	2	2						
11	1	26106-080602	BOLT, M8X 60 PLATED	4	4						

N:Old $\xleftrightarrow[\text{No}]{\text{Yes}}$ New, Q:Old $\xleftrightarrow[\text{Yes}]{\text{No}}$ New, R:Old $\xleftrightarrow[\text{Yes}]{\text{Yes}}$ New, S:Old $\xleftrightarrow[\text{No}]{\text{No}}$ New, W:Add, Z:Discontinued, F:Interchangeable by set, K:Q'ty Change

Copyright (C) 2017 YANMAR CO., LTD. All RightsReserved.

Fig.19. MIXING ELBOW(STANDARD TYPE)

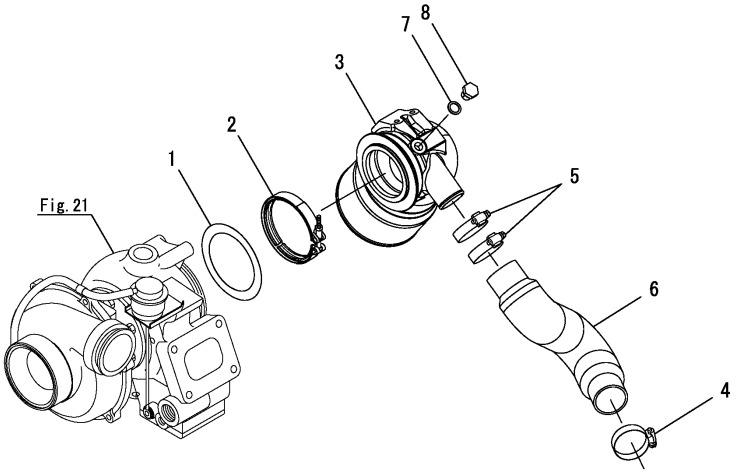

(A)=6LY440
(B)=6LY400
(C)=
(D)=
(E)=
(F)=

No.	Lev.	Parts No.	Description	Q'ty (A)	(B)	(C)	(D)	(E)	(F)	I	R
1	1	119574-13251	GASKET	1	1						
2	1	119574-13300	CLAMP	1	1						
3	1	119574-13530	ELBOW, MIXING	1	1						
4	1	119172-48480	CLAMP, HOSE 48	1	1						
5	1	119172-48480	CLAMP, HOSE 48	2	2						
6	1	119574-49751	HOSE, MIXING	1	1						
7	1	23414-130000	GASKET, 13X1.0	1	1						
8	1	23893-020002	PLUG, G1/4	1	1						

N:Old ◄Yes/No► New, Q:Old ◄No/Yes► New, R:Old ◄Yes/Yes► New, S:Old ◄No/No► New, W:Add, Z:Discontinued, F:Interchangeable by set, K:Q'ty Change

Copyright (C) 2017 YANMAR CO., LTD. All RightsReserved.

Fig.20. MIXING ELBOW(U TYPE)

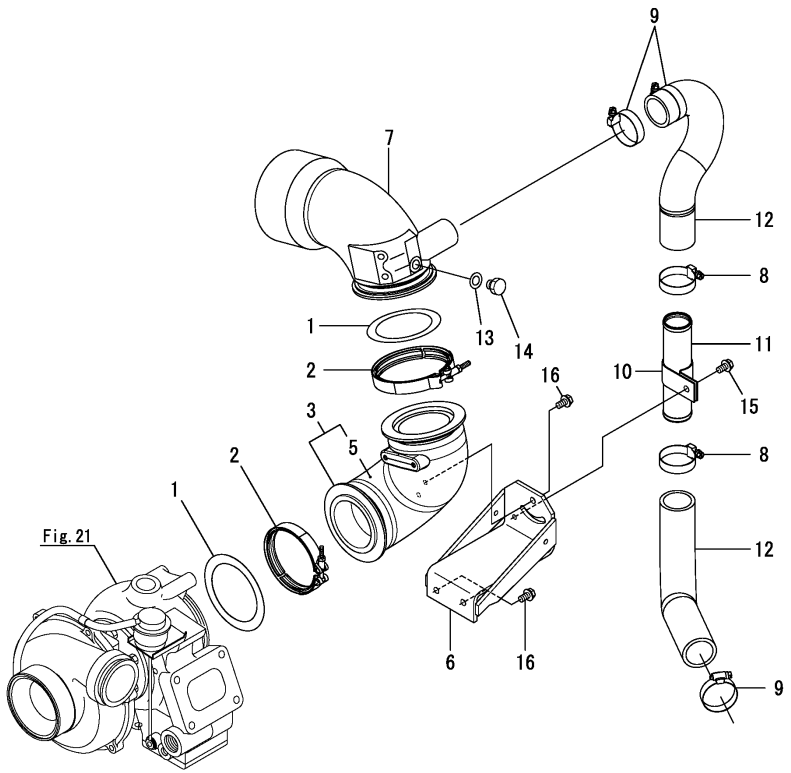

(A)=6LY440
(B)=6LY400
(C)=
(D)=
(E)=
(F)=

No.	Lev.	Parts No.	Description	Q'ty (A)	(B)	(C)	(D)	(E)	(F)	I	R
1	1	119574-13251	GASKET	2	2						
2	1	119574-13300	CLAMP	2	2						
3	1	119575-13300	BEND ASSY	1	1						
5	2	119575-13320	MAT	1	1						
6	1	119575-13330	BRACKET	1	1						
7	1	119574-13530	ELBOW, MIXING	1	1						
8	1	119172-48480	CLAMP, HOSE 48	2	2						
9	1	119172-48480	CLAMP, HOSE 48	3	3						
10	1	119779-49210	RETAINER	1	1						
11	1	119581-49230	PIPE, SW	1	1						
12	1	119574-49751	HOSE, MIXING	2	2						
13	1	23414-130000	GASKET, 13X1.0	1	1						
14	1	23893-020002	PLUG, G1/4	1	1						
15	1	26106-080102	BOLT, M8X 10 PLATED	1	1						
16	1	26106-080142	BOLT, M8X 14 PLATED	4	4						

N:Old ◄Yes/No► New, Q:Old ◄No/Yes► New, R:Old ◄Yes/Yes► New, S:Old ◄No/No► New, W:Add, Z:Discontinued, F:Interchangeable by set, K:Q'ty Change

Copyright (C) 2017 YANMAR CO., LTD. All RightsReserved.

Fig.62. (20A)MIXING ELBOW(V-DRIVE SPEC.)

(A)=6LY440
(B)=6LY400
(C)=
(D)=
(E)=
(F)=

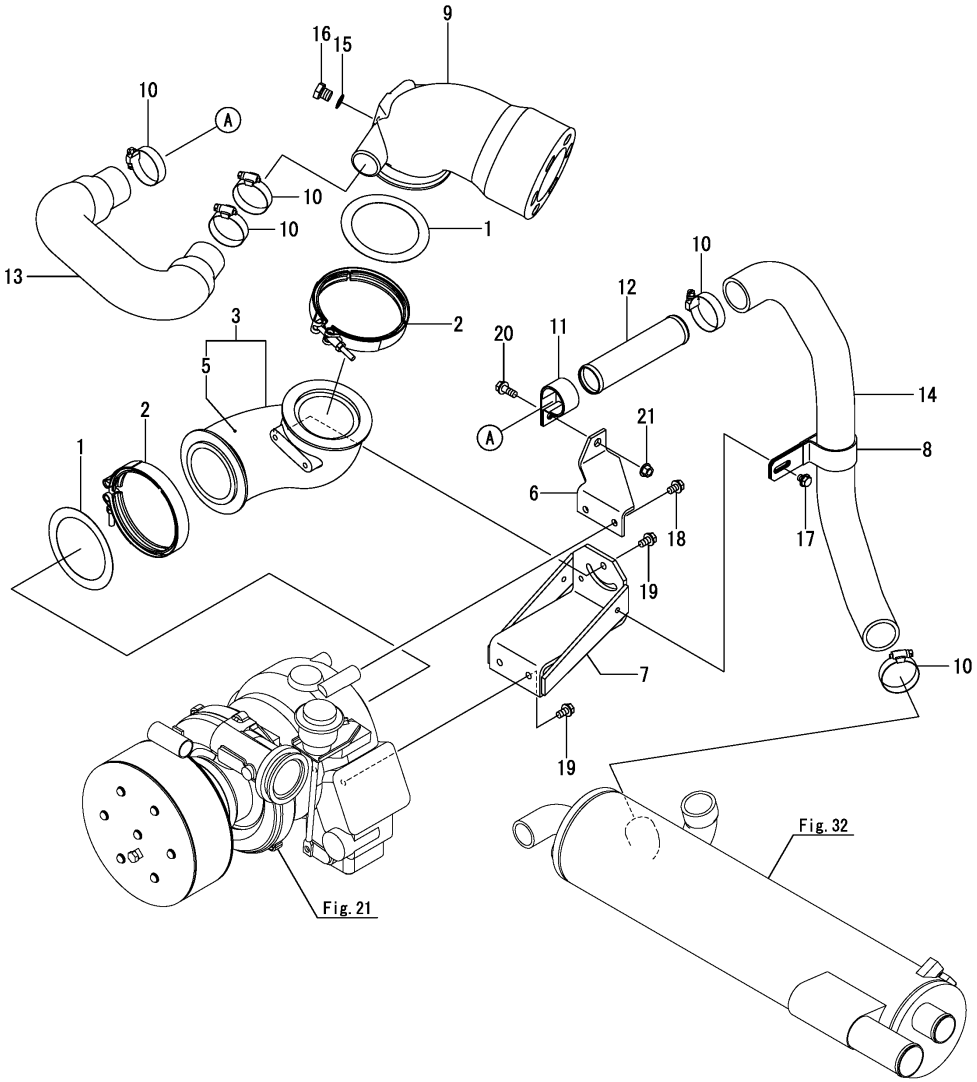

No.	Lev.	Parts No.	Description	Q'ty (A)	(B)	(C)	(D)	(E)	(F)	I	R
1	1	119574-13251	GASKET	2	2						
2	1	119574-13300	CLAMP	2	2						
3	1	119575-13300	BEND ASSY	1	1						
5	2	119575-13320	MAT	1	1						
6	1	119578-13300	BRACKET	1	1						
7	1	119575-13330	BRACKET	1	1						
8	1	119575-13350	FITTING, PIPE	1	1						
9	1	119574-13530	ELBOW, MIXING	1	1						
10	1	119172-48480	CLAMP, HOSE 48	5	5						
11	1	119779-49210	RETAINER	1	1						
12	1	119578-49240	PIPE	1	1						
13	1	119574-49751	HOSE, MIXING	1	1						
14	1	119581-49960	HOSE, RISER	1	1						
15	1	23414-130000	GASKET, 13X1.0	1	1						
16	1	23893-020002	PLUG, G1/4	1	1						
17	1	26106-080102	BOLT, M8X 10 PLATED	1	1						
18	1	26106-080122	BOLT, M8X 12 PLATED	2	2						
19	1	26106-080142	BOLT, M8X 14 PLATED	4	4						
20	1	26106-080202	BOLT, M8X 20 PLATED	1	1						
21	1	26366-080002	NUT, M8	1	1						

N:Old $\overset{\text{Yes}}{\underset{\text{No}}{\leftrightarrows}}$ New, Q:Old $\overset{\text{No}}{\underset{\text{Yes}}{\leftrightarrows}}$ New, R:Old $\overset{\text{Yes}}{\underset{\text{Yes}}{\leftrightarrows}}$ New, S:Old $\overset{\text{No}}{\underset{\text{No}}{\leftrightarrows}}$ New, W:Add, Z:Discontinued, F:Interchangeable by set, K:Q'ty Change

Copyright (C) 2017 YANMAR CO., LTD. All RightsReserved.

Fig.21. TURBINE

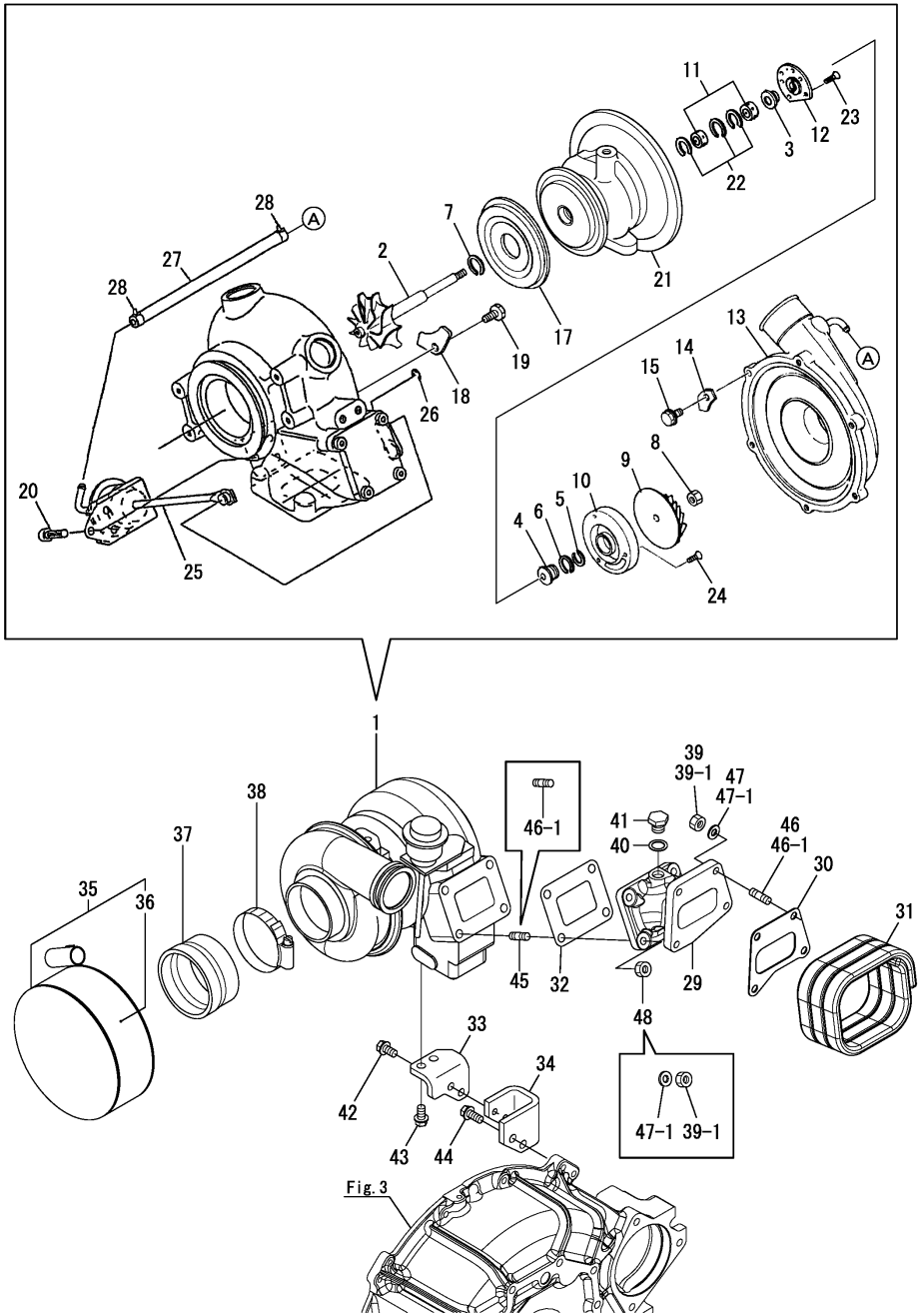

(A)=6LY440 (D)=
(B)=6LY400 (E)=
(C)= (F)=

No.	Lev.	Parts No.	Description	Q'ty (A)	(B)	(C)	(D)	(E)	(F)	I	R
1	1	119578-18010	TURBINE ASSY	1	1						
2	2	XNH172003	SHAFT ASSY	1	1						
3	2	XNH271351	BUSH	1	1						
4	2	XNH171881	OIL THROWER	1	1						
5	2	XNH261605	RING, SEAL	1	1						
6	2	XNH191305	RING, SEAL	1	1						
7	2	XNN171107	RING, SEAL	1	1						
8	2	XNN171110	NUT	1	1						
9	2	XNH175702	IMPELLER, COMPRESSER	1	1						
10	2	XNH172504	SEAL PLATE	1	1						
11	2	XNN173504	BEARING	2	2						
12	2	XNH273502	THRUST BEARING	1	1						
13	2	XNH174858	HOUSING, GOVERNOR	1	1						
14	2	XNH174404	RETAINER	5	5						
15	2	XNH747101	BOLT	6	6						
17	2	XNH178265	PLATE,INSULATION	1	1						
18	2	XNN137423	RETAINER	8	8						
19	2	XNN137007	BOLT, M8	8	8						
20	2	XNH362809	FLAT BOLT	3	3						
21	2	XNH173440	HOUSING	1	1						
22	2	XNN173204	CIRCLIP	3	3						
23	2	XNH193006	BOLT	4	4						
24	2	XNB133206	SCREW	4	4						
25	2	XNH964291	ACTUATOR	1	1						
26	2	XJD532012	CIRCLIP	1	1						
27	2	XNH964293	HOSE	1	1						
28	2	XNN976662	CLIP	2	2						
29	1	119574-18051	BRACKET	1	1						
29-1	1	119574-18052	BRACKET, T/C	1	1					N	
	(A=E/#1716)	(B=E/#1740)									
30	1	119593-18080	GASKET	1	1						
31	1	119593-18071	LAGGING	1	1						
32	1	119593-18110	GASKET	1	1						
33	1	119581-18230	BRACKET, T/C A	1	1						
34	1	119581-18240	BRACKET, T/C B	1	1						
34-1	1	119581-18241	BRACKET, T/C B	1	1					N	
	(A=E/#2139)	(B=E/#2143)									
35	1	119578-18860	SILENCER	1	1						
36	2	119593-18880	FILTER, AIR 65MM	1	1						
37	1	119578-18880	PIPE, AIR INTAKE	1	1						
38	1	119578-18810	CLIP, HOSE	2	2						
39	1	26703-100002	NUT, M10	4	4						
39-1	1	26703-100002	NUT, M10	8	8					K	
	(A=E/#1716)	(B=E/#1740)									
40	1	23414-170000	GASKET, 17X1.0	1	1						
41	1	23894-030002	PLUG, G3/8	1	1						
42	1	26106-100182	BOLT, M10X 18 PLATED	2	2						
43	1	26106-100202	BOLT, M10X 20 PLATED	2	2						
44	1	26106-100302	BOLT, M10X 30 PLATED	2	2						
45	1	26213-100252	STUD, M10X 25	4	4					Z	
	(A=E/#1716)	(B=E/#1740)									

N:Old $\overset{\text{Yes}}{\underset{\text{No}}{\leftrightarrow}}$ New, Q:Old $\overset{\text{No}}{\underset{\text{Yes}}{\leftrightarrow}}$ New, R:Old $\overset{\text{Yes}}{\underset{\text{Yes}}{\leftrightarrow}}$ New, S:Old $\overset{\text{No}}{\underset{\text{No}}{\leftrightarrow}}$ New, W:Add, Z:Discontinued, F:Interchangeable by set, K:Q'ty Change

++ CONTINUE ++

Copyright (C) 2017 YANMAR CO., LTD. All RightsReserved.

Fig.21. TURBINE

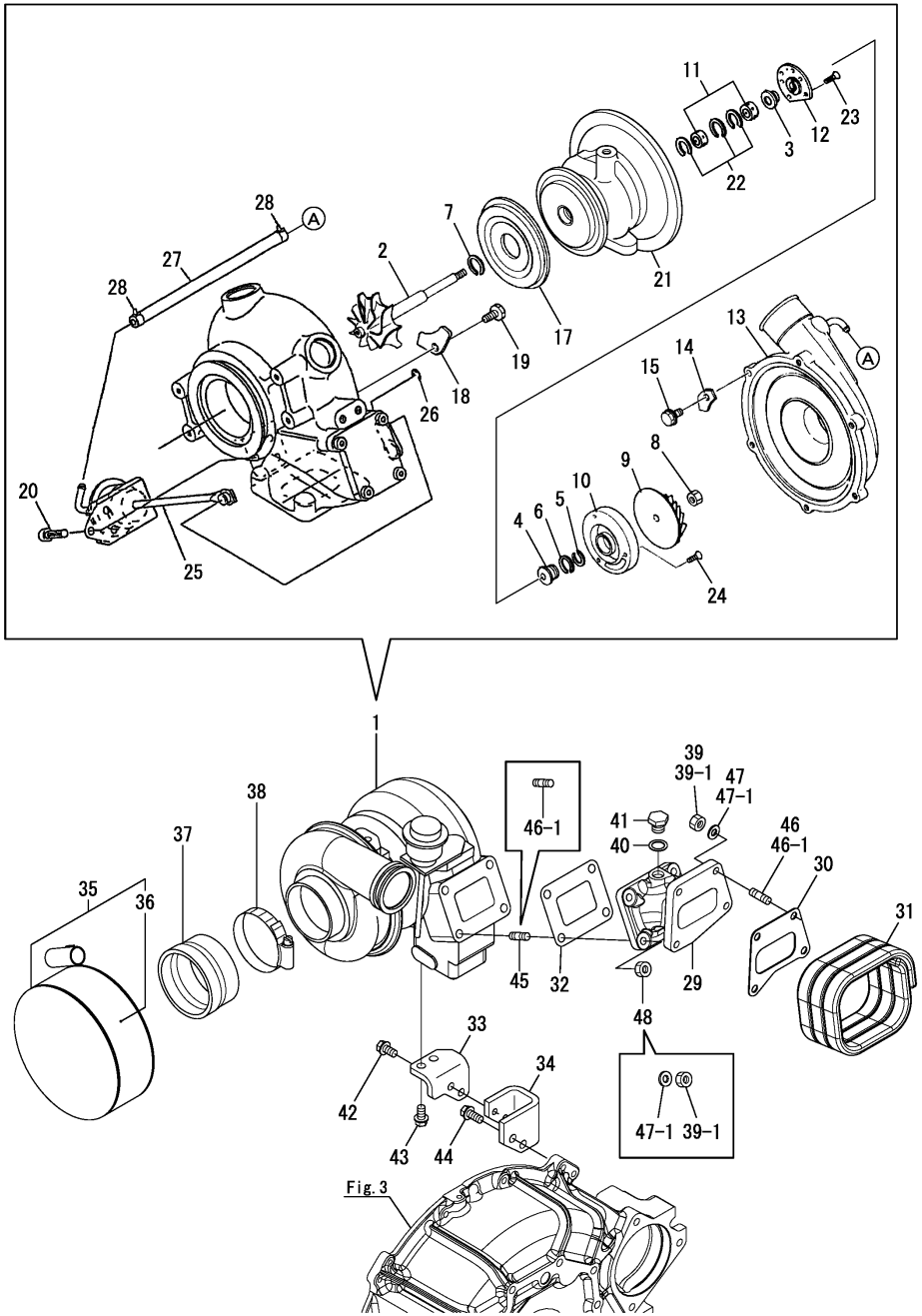

(A)=6LY440 (D)=
(B)=6LY400 (E)=
(C)= (F)=

No.	Lev.	Parts No.	Description	Q'ty (A)	(B)	(C)	(D)	(E)	(F)	I	R
46	1	119581-18100	STUD, M10X27	4	4						
46-1	1	119581-18100	STUD, M10X27	8	8					K	
	(A=E/#1716)	(B=E/#1740)									
47	1	22113-100001	WASHER,10	4	4						
47-1	1	22113-100001	WASHER,10	8	8					K	
	(A=E/#1716)	(B=E/#1740)									
48	1	129F01-13690	NUT, M10 SUS	4	4					Z	
	(A=E/#1716)	(B=E/#1740)									

N:Old $\xleftarrow[\text{No}]{\text{Yes}}$ New, Q:Old $\xleftarrow[\text{Yes}]{\text{No}}$ New, R:Old $\xleftarrow[\text{Yes}]{\text{Yes}}$ New, S:Old $\xleftarrow[\text{No}]{\text{No}}$ New, W:Add, Z:Discontinued, F:Interchangeable by set, K:Q'ty Change

Copyright (C) 2017 YANMAR CO., LTD. All RightsReserved.

Fig.22. INTER COOLER

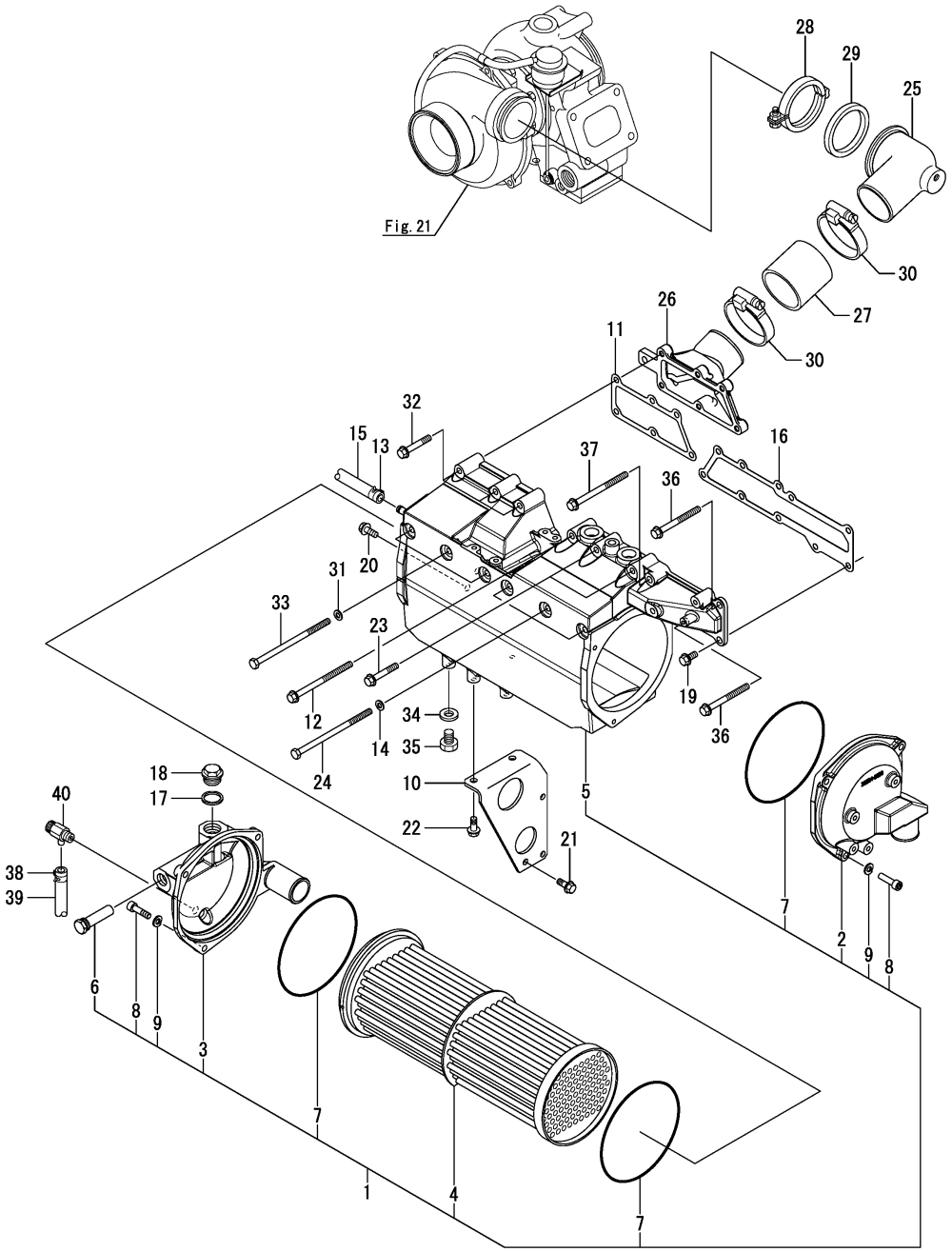

(A)=6LY440 (D)=
(B)=6LY400 (E)=
(C)= (F)=

No.	Lev.	Parts No.	Description	Q'ty (A)	(B)	(C)	(D)	(E)	(F)	I	R
1	1	119581-18110	COOLER ASSY, AIR	1	1						
2	2	119581-18750	BOX, WATER	1	1						
3	2	119574-18760	BOX, WATER	1	1						
4	2	119574-18770	TUBESTACK	1	1						
5	2	119581-18120	CASE	1	1						
6	2	119574-18790	ZINC, ANTI-CORROSIVE	1	1						
7	2	119574-18810	O-RING	3	3						
8	2	X214320104	SCREW	6	6						
9	2	X211851012	SPRING WASHER	6	6						
10	1	119595-18121	SUPPORT, AIR COOLER	1	1						
11	1	119595-18600	GASKET	1	1						
12	1	26106-081252	BOLT M 8X125 PLATED	1	1						
13	1	124766-59050	CLAMP, HOSE 11.5	1	1						
14	1	22137-080000	WASHER, 8	3	3						
15	1	23061-100750	PIPE, 10X 750	1	1						
16	1	119581-18600	PACKING, I/C	1	1						
17	1	22190-270002	WASHER, SEAL 27	1	1						
18	1	119574-18800	PLUG, M26X1.5	1	1						
19	1	26106-080202	BOLT, M8X 20 PLATED	1	1						
20	1	26106-080202	BOLT, M8X 20 PLATED	2	2						
21	1	26106-080202	BOLT, M8X 20 PLATED	3	3						
22	1	26106-080302	BOLT, M8X 30 PLATED	2	2						
23	1	26106-080552	BOLT, M8X 55 PLATED	2	2						
24	1	26116-081502	BOLT, M8X150 PLATED	3	3						
25	1	119595-18170	DUCT, AIR	1	1						
26	1	119581-18300	DUCT,AIR I/C	1	1						
27	1	119581-18310	HOSE, AIR DUCT	1	1						
27-1	1	119581-18311	HOSE, AIR DUCT	1	1					R	
	(A=*2017.09.)	(B=*2017.09.)									
28	1	119574-18700	BAND	1	1						
29	1	119593-18800	GASKET	1	1						
30	1	127687-18910	CLIP, HOSE	2	2						
31	1	22137-080000	WASHER, 8	3	3						
32	1	26113-080552	BOLT M 8X 55	3	3						
33	1	26113-081502	BOLT, M8X150	3	3						
34	1	23414-080012	GASKET, 8X1.0	1	1						
35	1	124790-55770	PLUG, 8	1	1						
36	1	26106-080902	BOLT, M8X 90 PLATED	2	2						
37	1	26106-081152	BOLT, M8X115 PLATED	1	1						
38	1	124460-77680	RETAINER	1	1						
39	1	23061-070400	PIPE, 7X 400	1	1						
40	1	119620-49290	COCK ASSY, 1/4	1	1						

N:Old $\overset{\text{Yes}}{\underset{\text{No}}{\leftrightarrows}}$ New, Q:Old $\overset{\text{No}}{\underset{\text{Yes}}{\leftrightarrows}}$ New, R:Old $\overset{\text{Yes}}{\underset{\text{Yes}}{\leftrightarrows}}$ New, S:Old $\overset{\text{No}}{\underset{\text{No}}{\leftrightarrows}}$ New, W:Add, Z:Discontinued, F:Interchangeable by set, K:Q'ty Change

Copyright (C) 2017 YANMAR CO., LTD. All RightsReserved.

Fig.23. CAMSHAFT & DRIVING GEAR

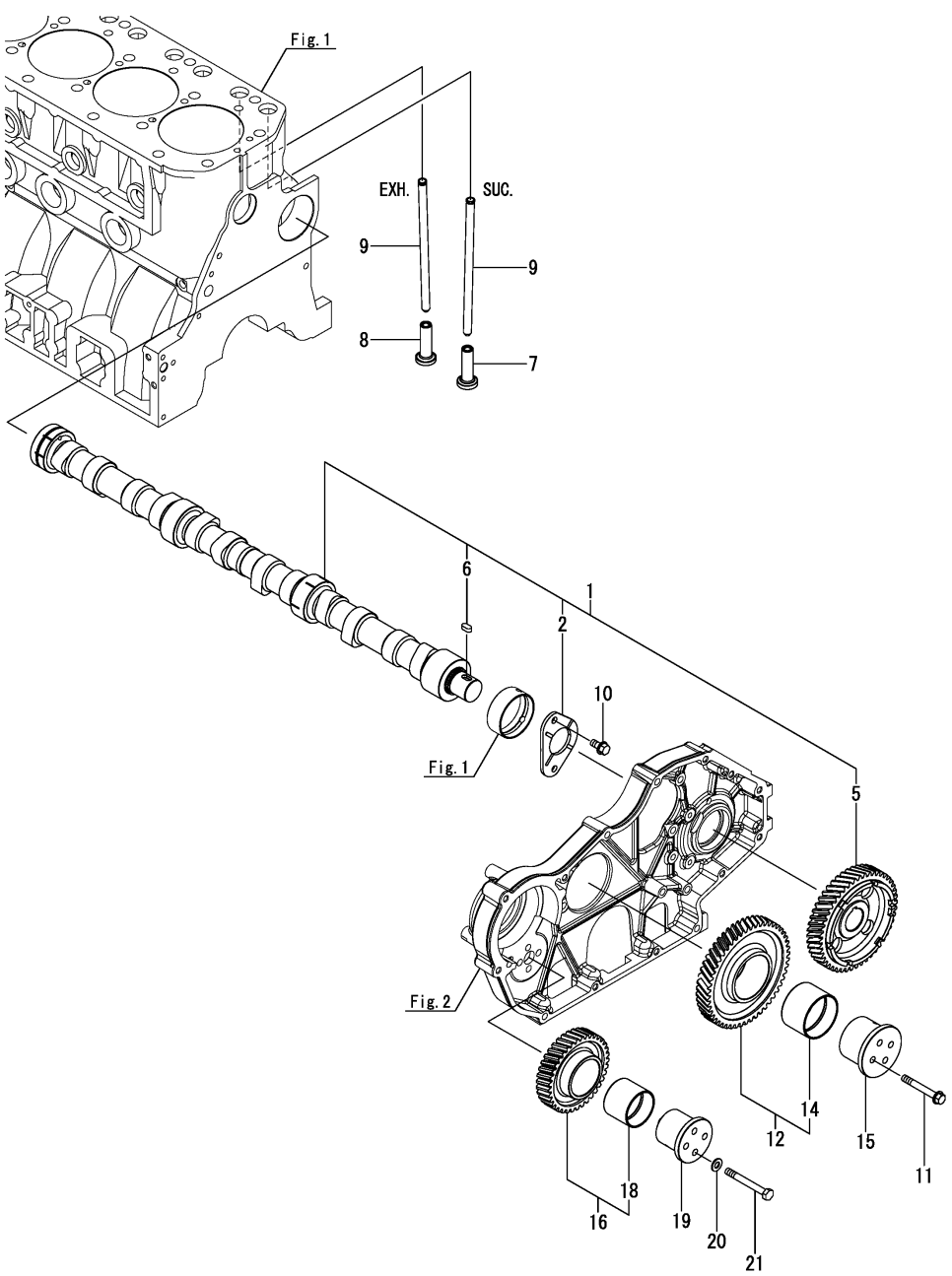

(A)=6LY440 (D)=
(B)=6LY400 (E)=
(C)= (F)=

No.	Lev.	Parts No.	Description	Q'ty (A)	(B)	(C)	(D)	(E)	(F)	I	R
1	1	119581-14100	CAMSHAFT ASSY	1	1						
2	2	119000-02450	BEARING, THRUST	1	1						
5	2	119581-14110	GEAR,CAM	1	1						
6	2	22512-070140	KEY, 7X 14	1	1						
7	1	119578-14210	TAPPET	6	6						
8	1	119578-14240	TAPPET	6	6						
9	1	119578-14400	ROD, PUSH	12	12						
10	1	26106-080162	BOLT, M8X 16 PLATED	2	2						
11	1	119802-13641	BOLT, M8X60 10.9T	4	4						
12	1	119581-25100	GEAR ASSY, IDLE NO.1	1	1						
14	2	119581-25120	BUSH, IDLE GEAR 1	1	1						
15	1	119581-25130	SHAFT,IDLE GEAR NO1	1	1						
16	1	119581-25200	GEAR ASSY, IDLE NO.2	1	1						
18	2	119581-25220	BUSH, IDLE GEAR 2	1	1						
19	1	119581-25230	SHAFT,IDLE GEAR NO2	1	1						
20	1	22137-080000	WASHER, 8	4	4						
21	1	26076-080702	BOLT, 10.98X 70	4	4						

N:Old $\xleftrightarrow[\text{No}]{\text{Yes}}$ New, Q:Old $\xleftrightarrow[\text{Yes}]{\text{No}}$ New, R:Old $\xleftrightarrow[\text{Yes}]{\text{Yes}}$ New, S:Old $\xleftrightarrow[\text{No}]{\text{No}}$ New, W:Add, Z:Discontinued, F:Interchangeable by set, K:Q'ty Change

Copyright (C) 2017 YANMAR CO., LTD. All RightsReserved.

Fig.24. CRANKSHAFT & FLYWHEEL

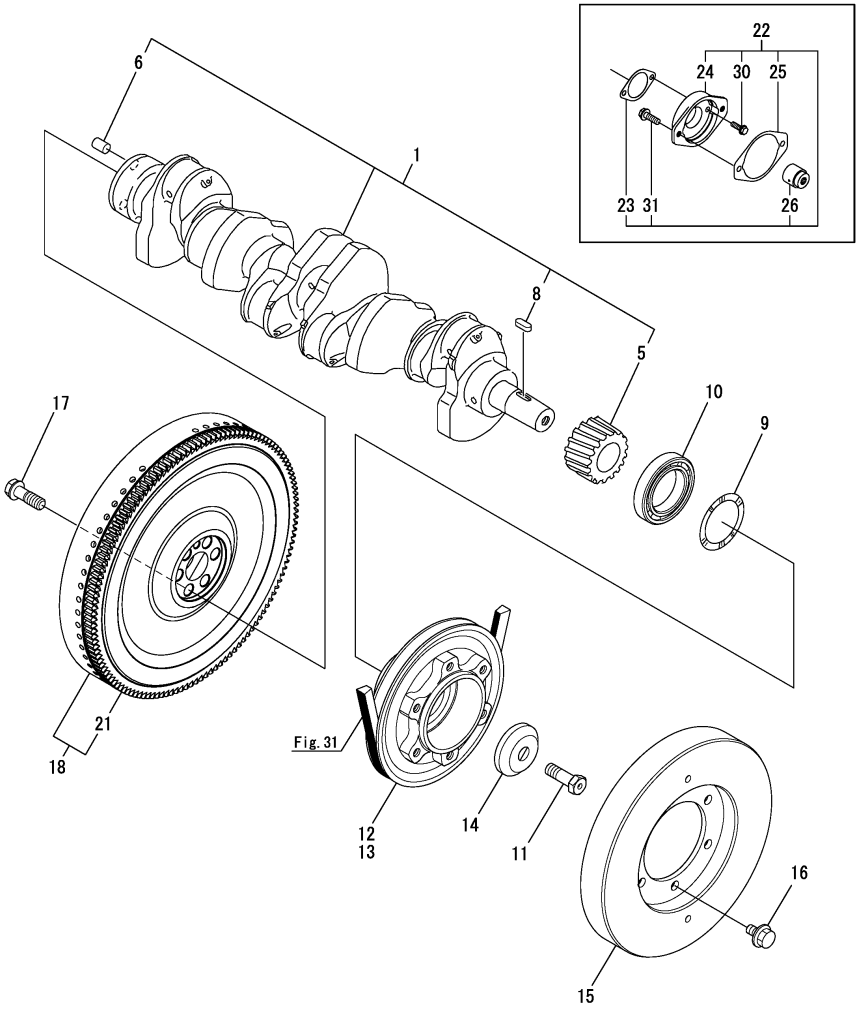

(A)=6LY440 (D)=
(B)=6LY400 (E)=
(C)= (F)=

No.	Lev.	Parts No.	Description	Q'ty (A)	(B)	(C)	(D)	(E)	(F)	I	R
1	1	719595-21700	CRANKSHAFT ASSY	1	1						
5	3	119595-21200	GEAR, CRANKSHAFT	1	1						
6	3	121850-21920	PIN, PARALLEL 10X22	1	1						
8	2	22512-070220	KEY, 7X 22	1	1						
9	1	119595-21300	WASHER, 50	1	1						
10	1	24101-060100	BEARING, BALL 6010C3	1	1						
11	1	123672-21500	BOLT, M16X50	1	1						
12	1	119595-21651	V-PULLEY	1	1						1
13	1	119581-21680	V-PULLEY, CRANKSHAFT	1	1					W	2
	(A=E/#1749)		(B=E/#1740)								
14	1	123672-21861	WASHER	1	1						
15	1	119578-28000	DAMPER	1	1						
16	1	26106-100222	BOLT, M10X 22 PLATED	6	6						
17	1	119593-21500	BOLT, FLYWHEEL	6	6						
18	1	119581-21600	FLYWHEEL ASSY	1	1						
21	2	127410-21480	GEAR, RING Z=129	1	1						
22	1	777524-02121	FLANGE KIT, PTO	1	1						3
23	2	177524-02211	GASKET, COVER	1	1						
24	2	177524-02221	FLANGE, SAE#A	1	1						
25	2	177524-02230	GASKET	1	1						
26	2	177524-03701	SLEEVE ASSY, SPLINE	1	1						
30	2	26106-080302	BOLT, M8X 30 PLATED	2	2						
31	2	26106-100352	BOLT, M10X 35 PLATED	2	2						

Remarks
(1)For Bosch Generator.
(2)For Denso Generator.
(3)For clutch PTO(Optional parts).

N:Old $\xleftrightarrow[\text{No}]{\text{Yes}}$ New, Q:Old $\xleftrightarrow[\text{Yes}]{\text{No}}$ New, R:Old $\xleftrightarrow[\text{Yes}]{\text{Yes}}$ New, S:Old $\xleftrightarrow[\text{No}]{\text{No}}$ New, W:Add, Z:Discontinued, F:Interchangeable by set, K:Q'ty Change

Copyright (C) 2017 YANMAR CO., LTD. All RightsReserved.

Fig.25. PISTON & CONNECTING ROD

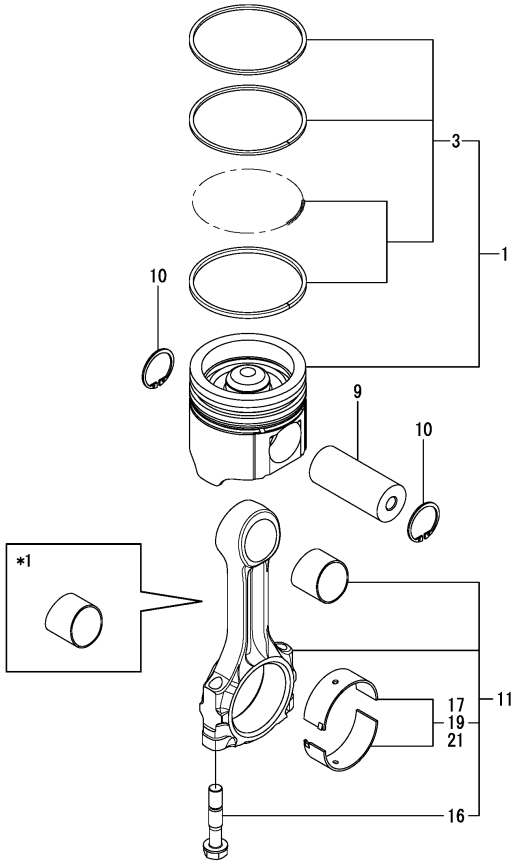

(A)=6LY440
(B)=6LY400
(C)=
(D)=
(E)=
(F)=

No.	Lev.	Parts No.	Description	Q'ty (A)	(B)	(C)	(D)	(E)	(F)	I	R
1	1	719581-22100	PISTON ASSY	6	6						
3	2	119578-22300	RING SET, PISTON	6	6						
9	1	119503-22301	PIN, PISTON	6	6						
10	1	22252-000370	RING, 37	12	12						
11	1	719595-23701	ROD ASSY, CONNECTING	6	6						
16	2	119593-23200	BOLT, CONNECTING ROD	12	12						
17	2	719595-23600	BEARING, CRANK PIN	6	6						
19	1	119593-23400	METAL ASSY, 0.25 US	6	6						1
21	1	119595-23310	METAL ASSY, 0.50	6	6						2

Remarks
*1. On a guarantee of quality, this parts shall not be sold.
(1)Under-sized(U.S.=0.25) parts.
(2)Under-sized(U.S.=0.50) parts.

N:Old ◄Yes/No► New, Q:Old ◄No/Yes► New, R:Old ◄Yes/Yes► New, S:Old ◄No/No► New, W:Add, Z:Discontinued, F:Interchangeable by set, K:Q'ty Change

Copyright (C) 2017 YANMAR CO., LTD. All RightsReserved.

Fig.26. LUB. OIL COOLER & FILTER

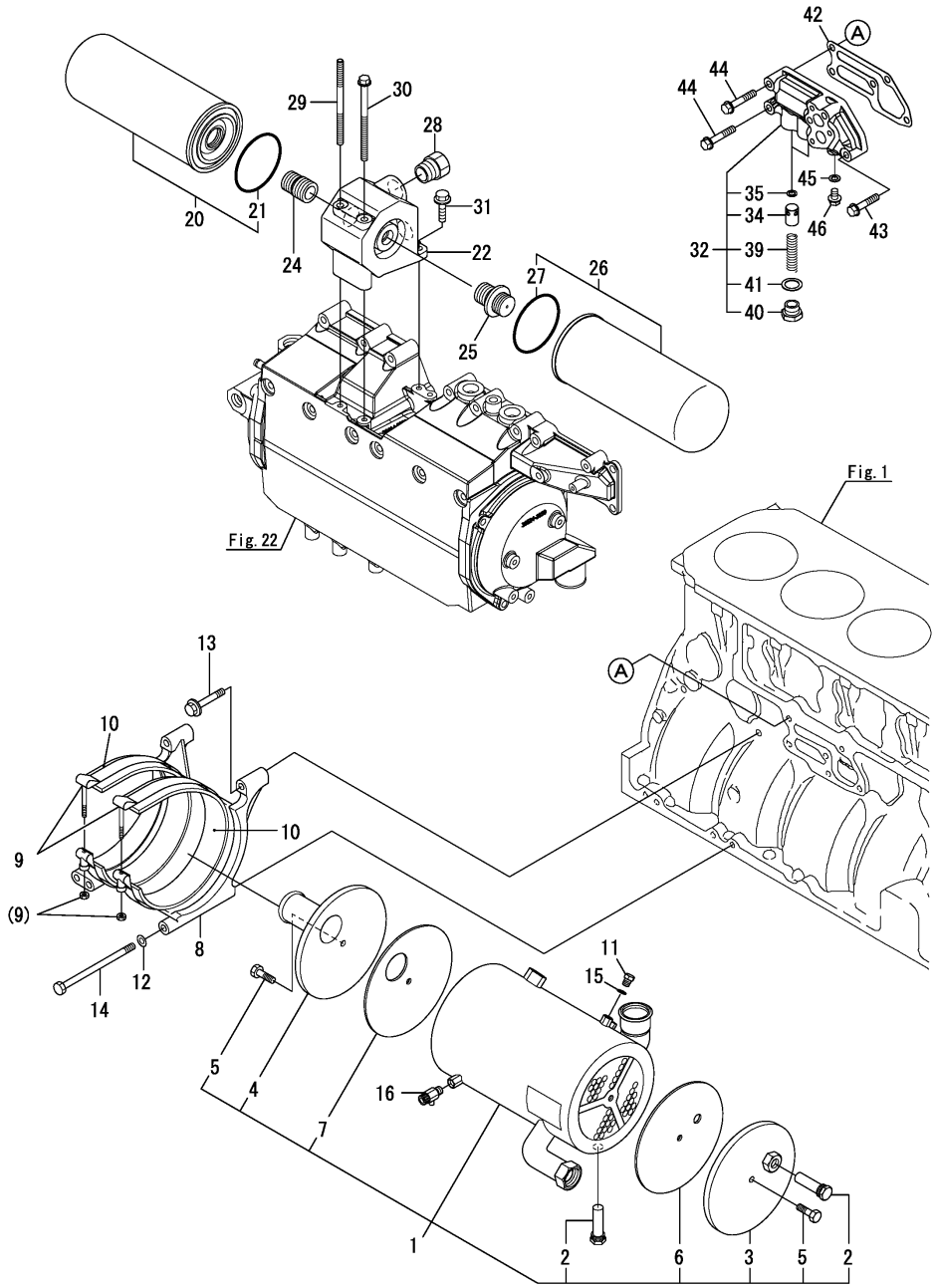

(A)=6LY440
(B)=6LY400
(C)=
(D)=
(E)=
(F)=

No.	Lev.	Parts No.	Description	Q'ty (A)	(B)	(C)	(D)	(E)	(F)	I	R
1	1	119574-33011	COOLER ASSY, OIL	1	1						
2	2	119574-44150	ZINC, ANTI-CORROSIVE	2	2						
3	2	119574-33180	COVER ASSY	1	1						
4	2	119574-33170	COVER ASSY, A	1	1						
5	2	119574-44180	BOLT, UNC 3/8	2	2						
6	2	119574-66160	GASKET	1	1						
7	2	119574-33150	GASKET	1	1						
8	1	119595-33050	BRACKET, COOLER	1	1						
9	1	119574-33600	CLAMP, BOLT	2	2						
10	1	119574-33621	SEAT, RUBBER	2	2						
11	1	119581-39770	PLUG, NPT 1/4	1	1						
12	1	22137-080000	WASHER, 8	3	3						
13	1	26106-080502	BOLT, M8X 50 PLATED	2	2						
14	1	26116-081302	BOLT, M8X130 PLATED	3	3						
15	1	23414-140018	GASKET, 14X1.0	1	1						
16	1	119620-49290	COCK ASSY, 1/4	1	1						
20	1	119593-35100	FILTER ASSY, OIL	1	1						
21	2	X0588530373	GASKET	1	1						
22	1	119595-35150	BRACKET, FILTER	1	1						
24	1	119593-35150	BRACKET	1	1						
25	1	119593-35161	BRACKET	1	1						
26	1	119593-35400	FILTER, OIL	1	1						
27	2	X0588530373	GASKET	1	1						
28	1	119574-39200	JOINT	2	2						
29	1	119581-35110	BOLT, STUD	1	1						
30	1	26106-081202	BOLT, M8X120 PLATED	1	1						
31	1	26106-080252	BOLT, M8X 25 PLATED	1	1						
32	1	119593-34001	VALVE ASSY, CONTROL	1	1						
34	2	119000-34030	VALVE, CONTROL	2	2						
35	2	121850-35200	SHIM SET	2	2						
39	2	124411-35520	SPRING	2	2						
40	2	123672-84530	RETAINER, VALVE	2	2						
41	2	23414-180000	GASKET, 18X1.0	2	2						
42	1	119593-34020	GASKET	1	1						
43	1	26106-080402	BOLT, M8X 40 PLATED	1	1						
44	1	26106-080452	BOLT, M8X 45 PLATED	4	4						
45	1	23414-080000	GASKET, 8X1.0	1	1						
46	1	26106-080122	BOLT, M8X 12 PLATED	1	1						

N:Old $\frac{\text{Yes}}{\text{No}}$ New, Q:Old $\frac{\text{No}}{\text{Yes}}$ New, R:Old $\frac{\text{Yes}}{\text{Yes}}$ New, S:Old $\frac{\text{No}}{\text{No}}$ New, W:Add, Z:Discontinued, F:Interchangeable by set, K:Q'ty Change

Copyright (C) 2017 YANMAR CO., LTD. All RightsReserved.

Fig.27. LUB. OIL PUMP & PIPE

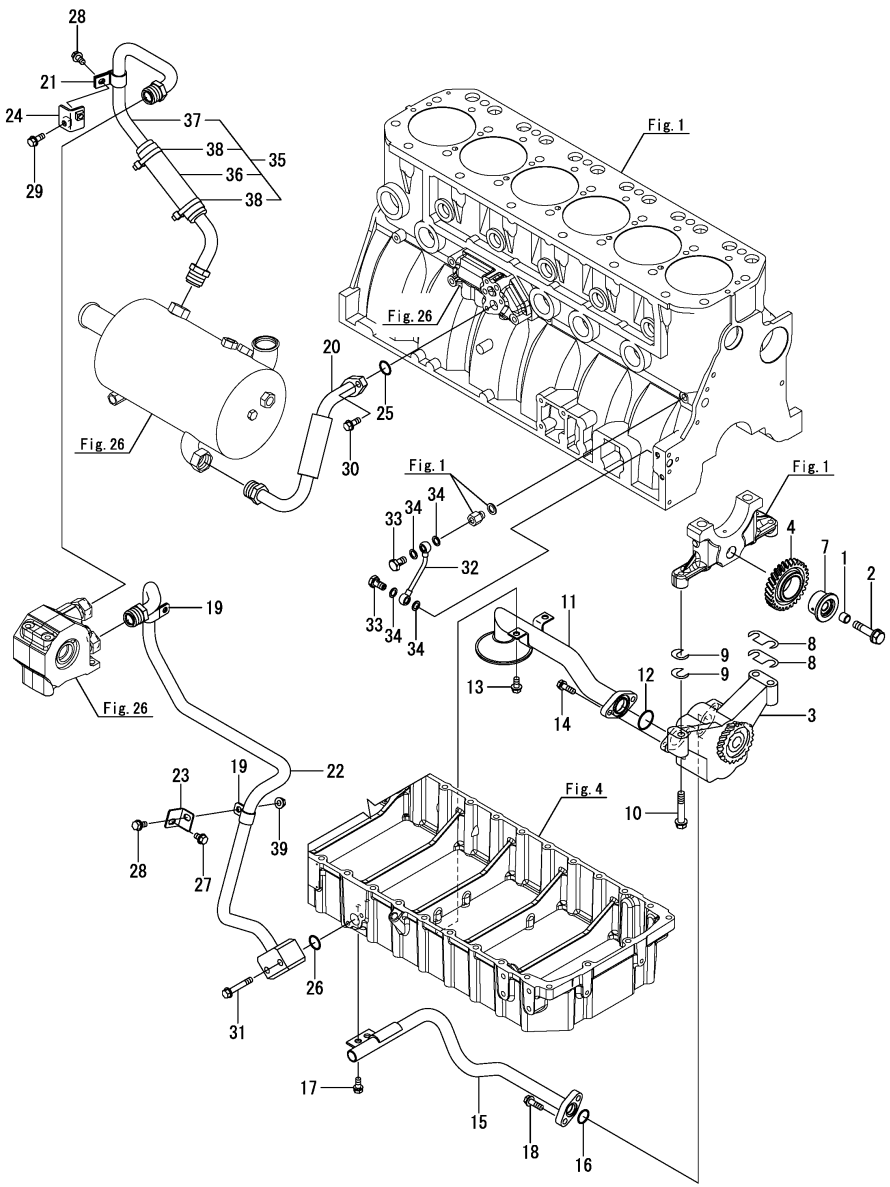

(A)=6LY440 (D)=
(B)=6LY400 (E)=
(C)= (F)=

No.	Lev.	Parts No.	Description	Q'ty (A)	(B)	(C)	(D)	(E)	(F)	I	R
1	1	124411-28400	PIN	2	2						
2	1	121950-28420	BOLT, M10X45	1	1						
3	1	119593-32001	PUMP ASSY, OIL	1	1						
4	1	119593-32500	GEAR ASSY, IDLE Z=29	1	1						
7	1	119593-32530	SHAFT, IDLE GEAR	1	1						
8	1	119593-32700	SHIM	2	2						1
8-1	1	119593-32700	SHIM	1	1					K	1
	(A=E/#2295)	(B=E/#2291)									
8A	1	119593-32720	SHIM, A 0.2	1	1					W	2
	(A=E/#2295)	(B=E/#2291)									
8B	1	119593-32740	SHIM, A 0.3	1	1					W	3
	(A=E/#2295)	(B=E/#2291)									
9	1	119593-32710	SHIM	2	2						1
9-1	1	119593-32710	SHIM	1	1					K	1
	(A=E/#2295)	(B=E/#2291)									
9A	1	119593-32730	SHIM, B 0.2	1	1					W	2
	(A=E/#2295)	(B=E/#2291)									
9B	1	119593-32750	SHIM, B 0.3	1	1					W	3
	(A=E/#2295)	(B=E/#2291)									
10	1	26106-100552	BOLT, M10X 55 PLATED	3	3						
11	1	119593-35191	PIPE ASSY, OIL INLET	1	1						
12	1	24311-000280	O-RING, 1AP28.0	1	1						
13	1	26106-080162	BOLT, M8X 16 PLATED	2	2						
14	1	26013-080252	BOLT, M8X 25	2	2						
15	1	119593-39151	PIPE ASSY, OIL	1	1						
16	1	24311-000200	O-RING, 1AP20.0	1	1						
17	1	26013-080182	BOLT, M8X 18	2	2						
18	1	26106-080252	BOLT, M8X 25 PLATED	2	2						
19	1	119778-26660	RETAINER	2	2						
20	1	119574-39152	PIPE ASSY, OIL	1	1						
21	1	119578-39180	RETAINER	1	1						
22	1	119581-39300	PIPE ASSY, LO FILTER	1	1						
23	1	119581-39311	SUPPORT, LO PIPE	1	1						
24	1	119581-39350	SUPPORT, LO PIPE	1	1						
25	1	24311-000200	O-RING, 1AP20.0	1	1						
26	1	24314-000200	O-RING, 4CP20.0	1	1						
27	1	26106-080122	BOLT, M8X 12 PLATED	1	1						
28	1	26106-080162	BOLT, M8X 16 PLATED	2	2						
29	1	26106-080202	BOLT, M8X 20 PLATED	1	1						
30	1	26106-080202	BOLT, M8X 20 PLATED	2	2						
31	1	26106-080502	BOLT, M8X 50 PLATED	2	2						
32	1	119581-39100	PIPE, LO 2ND IDLE	1	1						
33	1	124160-39140	BOLT, PIPE JOINT M10	2	2						
34	1	23414-100000	GASKET, 10X1.0	4	4						
35	1	119581-39370	PIPE ASSY	1	1						
36	2	119578-39170	PROTECTOR	1	1						
37	2	119581-39320	PIPE ASSY, LO COOLER	1	1						
38	2	29622-140001	BAND, RF140	2	2						
39	1	26366-080002	NUT, M8	1	1						

Remarks
(1)T=0.1mm.
(2)T=0.2mm.
(3)T=0.3mm.

N:Old $\frac{\text{Yes}}{\text{No}}$ New, Q:Old $\frac{\text{No}}{\text{Yes}}$ New, R:Old $\frac{\text{Yes}}{\text{Yes}}$ New, S:Old $\frac{\text{No}}{\text{No}}$ New, W:Add, Z:Discontinued, F:Interchangeable by set, K:Q'ty Change

Copyright (C) 2017 YANMAR CO., LTD. All RightsReserved.

Fig.28. LUB. OIL PIPE(TURBINE)

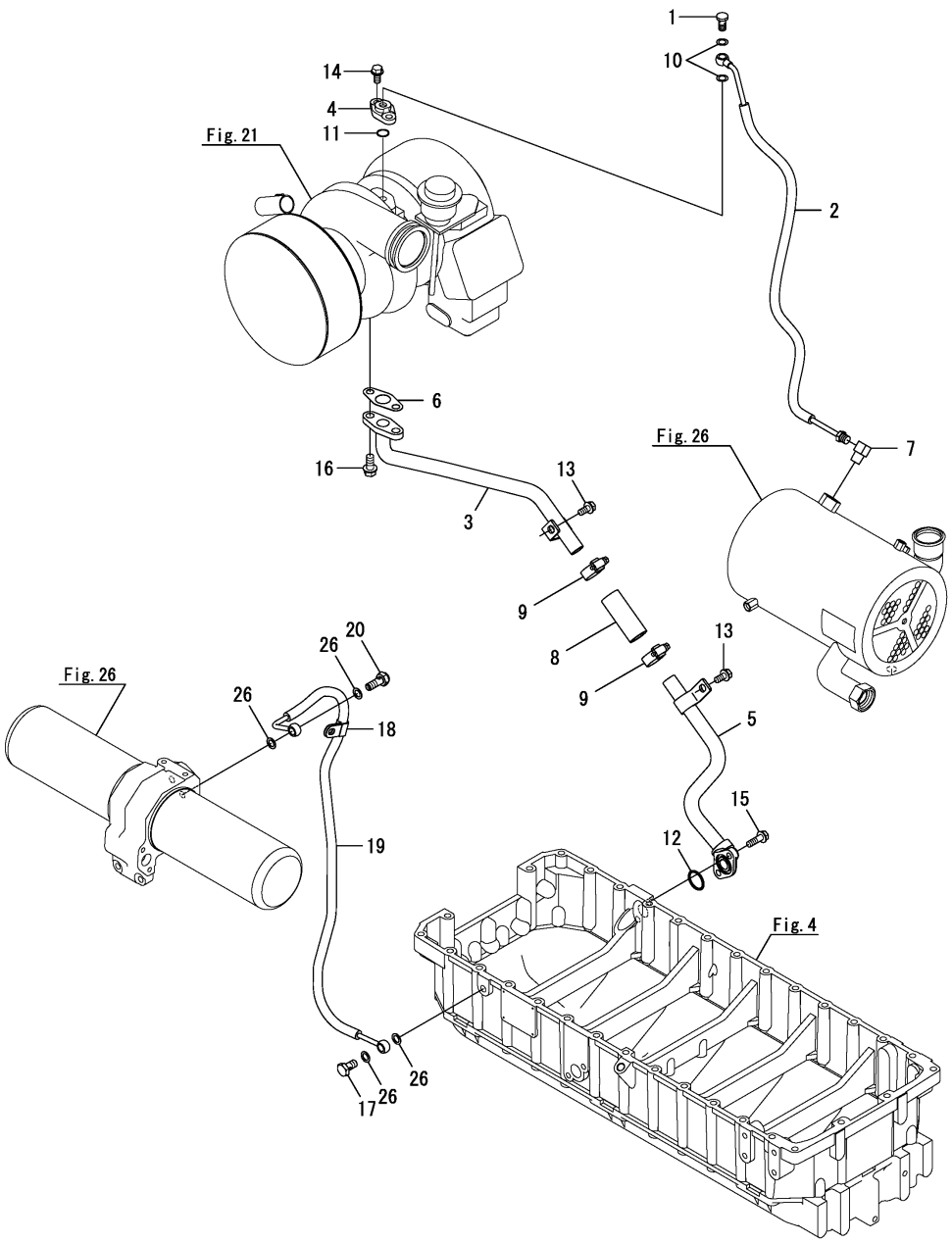

(A)=6LY440 (D)=
(B)=6LY400 (E)=
(C)= (F)=

No.	Lev.	Parts No.	Description	Q'ty (A)	(B)	(C)	(D)	(E)	(F)	I	R
1	1	124160-39140	BOLT, PIPE JOINT M10	1	1						
2	1	119581-39410	PIPE ASSY, LO T/C IN	1	1						
3	1	119581-39420	PIPE ASSY, LO T/C OU	1	1						
4	1	119593-39630	FLANGE, M10	1	1						
5	1	119574-39651	PIPE ASSY, OIL OUT	1	1						
6	1	119593-39690	GASKET	1	1						
7	1	119574-39720	JOINT	1	1						
8	1	123688-39820	JOINT	1	1						
9	1	119172-48350	CLIP, HOSE 35	2	2						
9-1	1	119172-48280	CLIP, HOSE 28	2	2					N	
	(A=E/#2289)	(B=E/#2262)									
10	1	23414-100000	GASKET, 10X1.0	2	2						
11	1	24314-000200	O-RING, 4CP20.0	1	1						
12	1	24324-000250	O-RING, 4CG25.0	1	1						
13	1	26106-080162	BOLT, M8X 16 PLATED	2	2						
14	1	26106-080202	BOLT, M8X 20 PLATED	2	2						
15	1	26106-080252	BOLT, M8X 25 PLATED	2	2						
16	1	26106-100202	BOLT, M10X 20 PLATED	2	2						
17	1	124160-39140	BOLT, PIPE JOINT M10	1	1						
18	1	119593-39450	RETAINER, PIPE	1	1						
19	1	119581-39500	PIPE ASSY, BYPASS	1	1						
20	1	119187-39700	VALVE ASSY, CHECK	1	1						
26	1	23414-100000	GASKET, 10X1.0	4	4						

N:Old $\xleftrightarrow[\text{No}]{\text{Yes}}$ New, Q:Old $\xleftrightarrow[\text{Yes}]{\text{No}}$ New, R:Old $\xleftrightarrow[\text{Yes}]{\text{Yes}}$ New, S:Old $\xleftrightarrow[\text{No}]{\text{No}}$ New, W:Add, Z:Discontinued, F:Interchangeable by set, K:Q'ty Change

Copyright (C) 2017 YANMAR CO., LTD. All RightsReserved.

Fig.29. OIL SUCTION/DRAIN PUMP(OPTIONAL)

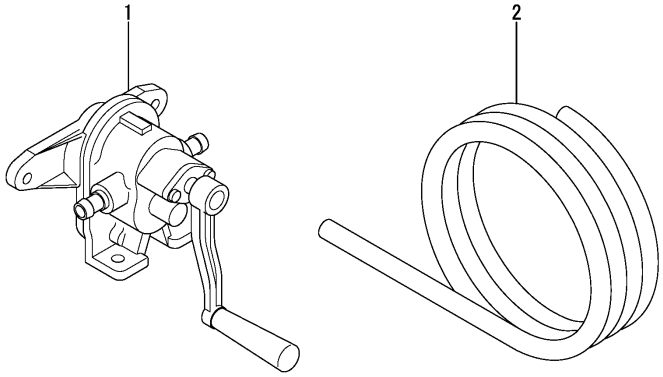

(A)=6LY440
(B)=6LY400
(C)=
(D)=
(E)=
(F)=

No.	Lev.	Parts No.	Description	Q'ty (A)	(B)	(C)	(D)	(E)	(F)	I	R
1	1	124413-39100	PUMP ASSY, WASTE	1	1						
2	1	120130-39990	HOSE,OIL DRAIN 3M	1	1						

N:Old ◄Yes/No► New, Q:Old ◄No/Yes► New, R:Old ◄Yes/Yes► New, S:Old ◄No/No► New, W:Add, Z:Discontinued, F:Interchangeable by set, K:Q'ty Change

Copyright (C) 2017 YANMAR CO., LTD. All RightsReserved.

Fig.30. COOLING PUMP(SEA WATER)

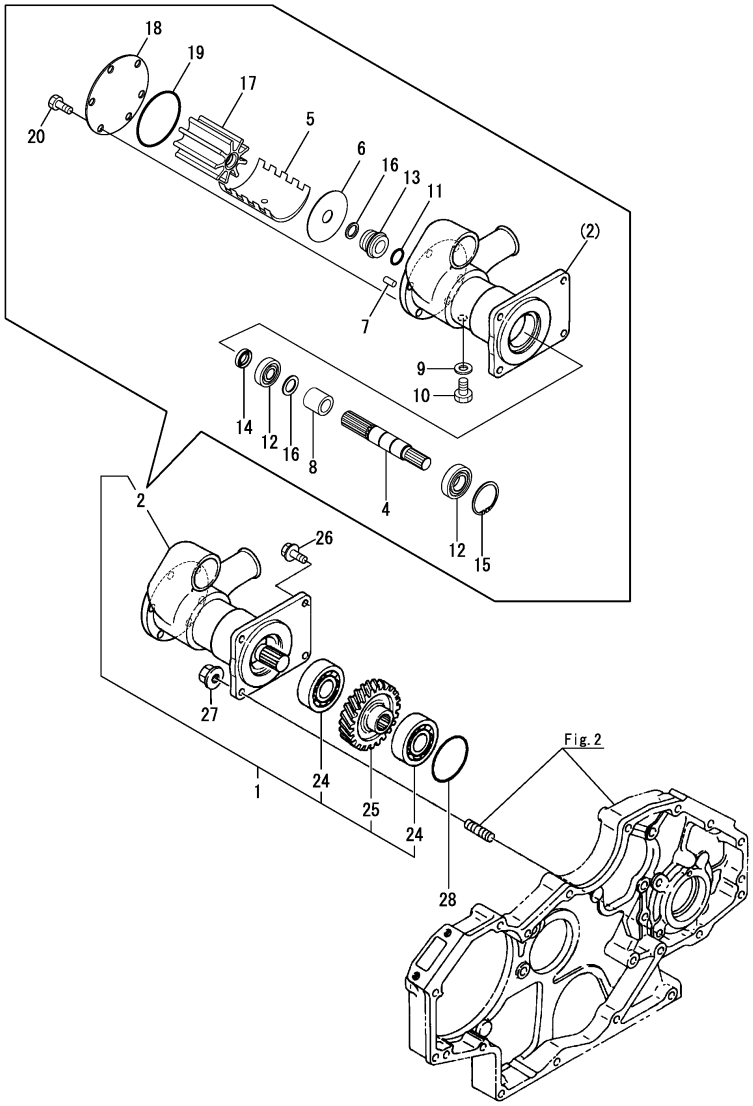

(A)=6LY440 (D)=
(B)=6LY400 (E)=
(C)= (F)=

No.	Lev.	Parts No.	Description	Q'ty (A)	(B)	(C)	(D)	(E)	(F)	I	R
1	1	719574-42700	PUMP ASSY, WATER	1	1						
2	2	119574-42502	PUMP ASSY, WATER	1	1						
4	3	X0135771	SHAFT	1	1						
5	3	119578-42610	CAM, PUMP	1	1						
6	3	119578-42620	PLATE	1	1						
7	3	119578-42630	PIN	1	1						
8	3	119578-42690	SPACER	1	1						
9	3	119578-42700	WASHER	1	1						
10	3	119578-42720	SCREW	1	1						
11	3	119578-42640	O-RING	1	1						
12	3	119578-42660	BEARING	2	2						
13	3	119578-42600	SEAL, MECHANICAL	1	1						
14	3	119578-42650	SEAL, LIP	1	1						
15	3	119578-42680	RETAINER, BEARING	1	1						
16	3	119578-42670	RETAINER, SEAL	2	2						
17	3	119574-42552	IMPELLER	1	1						
18	3	119574-42560	COVER, END	1	1						
19	3	119574-42570	O-RING	1	1						
20	3	119574-42580	SCREW	6	6						
21	2	119574-42510	WEAR KIT	1	1						1
22	2	119574-42520	SHAFT KIT	1	1						2
23	2	119574-42530	IMPELLER KIT	1	1						3
24	2	24101-060064	BEARING, BALL 6006	2	2						
25	2	119100-26200	GEAR, PUMP	1	1						
26	1	26106-080202	BOLT, M8X 20 PLATED	2	2						
27	1	26306-080002	NUT, M8	2	2						
28	1	24341-000800	O-RING, 1AS80.0	1	1						

Remarks
(1)Not illustrated(Include No.5, 6, 7, 9, 10, 11, 13, 16, 18 & 19).
(2)Not illustrated(Include No.8, 11, 12, 13, 15 & 16).
(3)Not illustrated(Include No.17, 19 & 20).

N:Old ◄Yes/No► New, Q:Old ◄No/Yes► New, R:Old ◄Yes/Yes► New, S:Old ◄No/No► New, W:Add, Z:Discontinued, F:Interchangeable by set, K:Q'ty Change

Copyright (C) 2017 YANMAR CO., LTD. All RightsReserved.

Fig.31. COOLING PUMP(FRESH WATER)

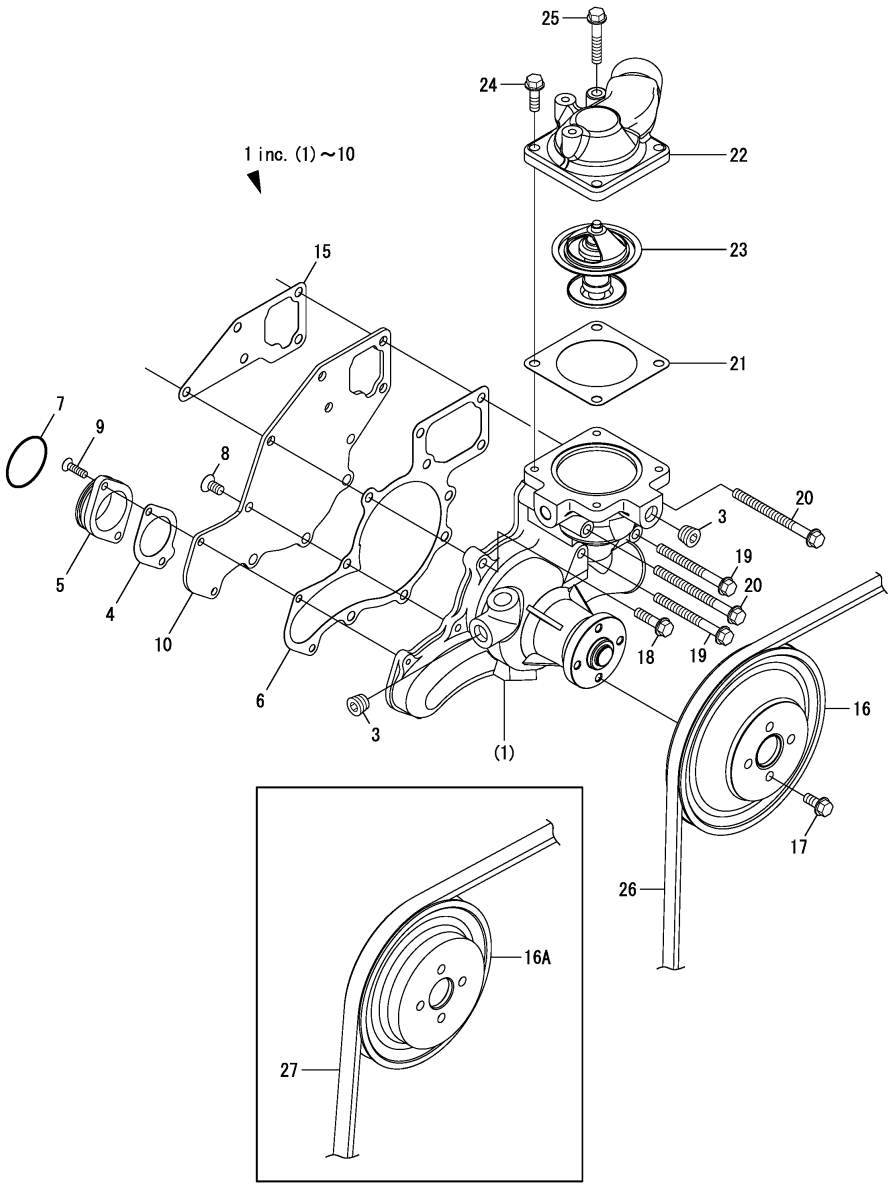

(A)=6LY440 (D)=
(B)=6LY400 (E)=
(C)= (F)=

No.	Lev.	Parts No.	Description	Q'ty (A)	(B)	(C)	(D)	(E)	(F)	I	R
1	1	119581-42010	PUMP ASSY, CFW	1	1						
3	2	23875-030000	PLUG, R03	2	2						
4	2	119578-42130	GASKET	1	1						
5	2	119593-42120	FLANGE, OUTLET	1	1						
5-1	2	119593-42121	FLANGE	1	1					N	
	(A=E/#1928)	(B=E/#1932)									
6	2	119581-42110	GASKET, WATER PUMP	1	1						
7	2	24321-000450	O-RING, 1AG45.0	1	1						
8	2	26577-080162	SCREW, M8X16	5	5						
9	2	26577-060222	SCREW M 6X 22	2	2						
10	2	119581-42120	COVER, PUMP	1	1						
15	1	119581-42020	PACKING, CFW-PUMP	1	1						
16	1	119593-42300	V-PULLEY	1	1						1
16A	1	119581-42420	PULLEY, CFW-P	1	1					W	2
	(A=E/#1749)	(B=E/#1740)									
17	1	26106-080182	BOLT, M8X 18 PLATED	4	4						
18	1	26106-080302	BOLT, M8X 30 PLATED	1	1						
19	1	26106-080802	BOLT, M8X 80 PLATED	2	2						
20	1	26106-080952	BOLT, M8X 95 PLATED	2	2						
21	1	119593-49291	GASKET, THERMOSTAT	1	1						
22	1	119593-49530	COVER, THERMOSTAT	1	1						
23	1	127605-48590	THERMOSTAT, 71	1	1						
24	1	26106-080252	BOLT, M8X 25 PLATED	3	3						
25	1	26106-080452	BOLT, M8X 45 PLATED	1	1						
26	1	119593-42280	V-BELT, A53	1	1						1
27	1	119581-42370	V-BELT, 53	1	1					W	2
	(A=E/#1749)	(B=E/#1740)									

Remarks
(1)For Bosch Generator.
(2)For Denso Generator.

N:Old $\xleftarrow[\text{No}]{\text{Yes}}$ New, Q:Old $\xleftarrow[\text{Yes}]{\text{No}}$ New, R:Old $\xleftarrow[\text{Yes}]{\text{Yes}}$ New, S:Old $\xleftarrow[\text{No}]{\text{No}}$ New, W:Add, Z:Discontinued, F:Interchangeable by set, K:Q'ty Change

Copyright (C) 2017 YANMAR CO., LTD. All RightsReserved.

Fig.32. COOLER(FRESH WATER)

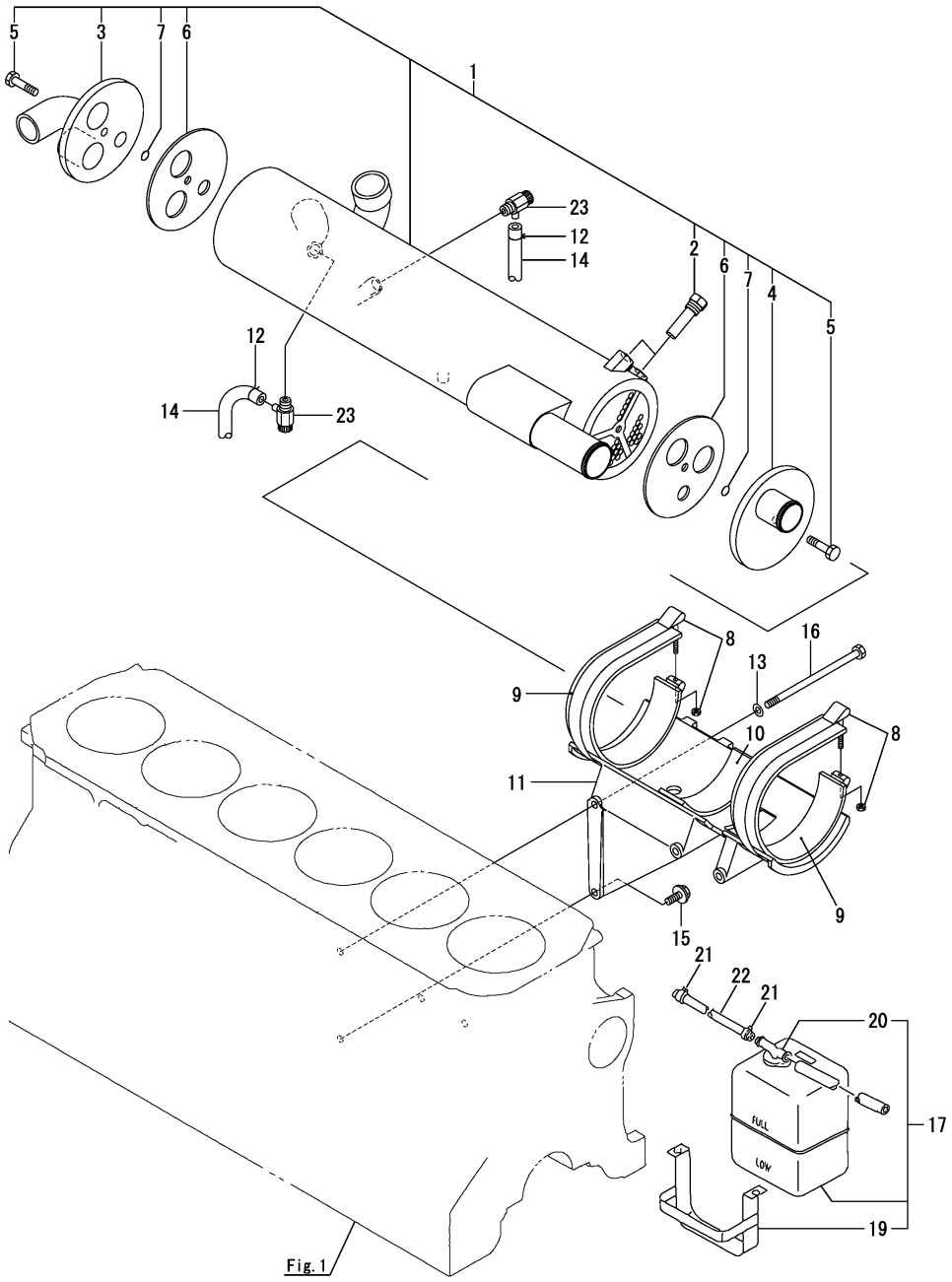

(A)=6LY440
(B)=6LY400
(C)=
(D)=
(E)=
(F)=

No.	Lev.	Parts No.	Description	Q'ty (A)	(B)	(C)	(D)	(E)	(F)	I	R
1	1	119575-44010	COOLER ASSY, WATER	1	1						
2	2	119574-44150	ZINC, ANTI-CORROSIVE	2	2						
3	2	119574-44200	COVER ASSY	1	1						
4	2	119574-44190	COVER ASSY	1	1						
5	2	119574-44180	BOLT, UNC 3/8	2	2						
6	2	119574-44170	GASKET	2	2						
7	2	119175-33350	O-RING	2	2						
8	1	119574-44600	CLAMP, BOLT	2	2						
9	1	119574-44621	SEAT, RUBBER	2	2						
10	1	119574-44630	SEAT, RUBBER	1	1						
11	1	119595-44050	BRACKET, COOLER	1	1						
12	1	124460-77680	RETAINER	2	2						
13	1	22137-080000	WASHER, 8	3	3						
14	1	23061-070400	PIPE, 7X 400	2	2						
15	1	26106-080202	BOLT, M8X 20 PLATED	1	1						
16	1	26116-081502	BOLT, M8X150 PLATED	3	3						
17	1	720445-44201	TANK ASSY, SUB 3.4L	1	1						
19	2	119593-44560	BRACKET, SUB TANK	1	1						
20	2	X0225002201	CONDUCTION ASSY	1	1						
21	1	23010-013000	CLAMP 13	2	2						
22	1	124790-44560	PIPE, WATER L=1000	1	1						
23	1	119620-49290	COCK ASSY, 1/4	2	2						

N:Old $\xleftarrow[\text{No}]{\text{Yes}}$ New, Q:Old $\xleftarrow[\text{Yes}]{\text{No}}$ New, R:Old $\xleftarrow[\text{Yes}]{\text{Yes}}$ New, S:Old $\xleftarrow[\text{No}]{\text{No}}$ New, W:Add, Z:Discontinued, F:Interchangeable by set, K:Q'ty Change

Copyright (C) 2017 YANMAR CO., LTD. All RightsReserved.

Fig.33. COOLING PIPE(SEA WATER)

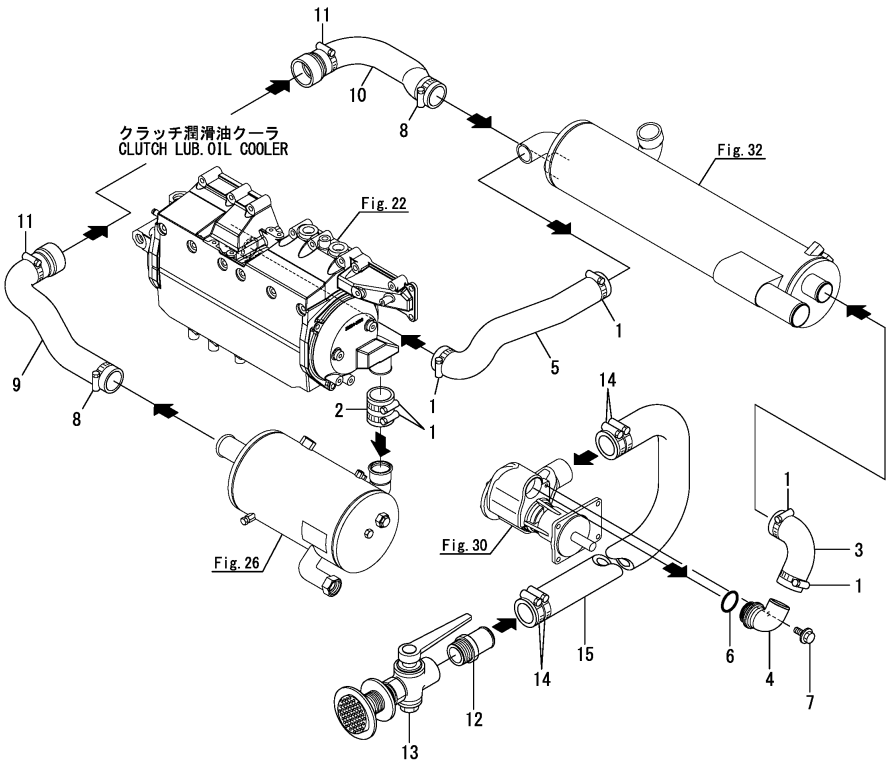

(A)=6LY440
(B)=6LY400
(C)=
(D)=
(E)=
(F)=

No.	Lev.	Parts No.	Description	Q'ty (A)	(B)	(C)	(D)	(E)	(F)	I	R
1	1	119172-48480	CLAMP, HOSE 48	6	6						
2	1	119574-49050	HOSE, RUBBER	1	1						
3	1	119595-49060	HOSE, COOLER	1	1						
4	1	119595-49070	BEND	1	1						
5	1	119581-49080	HOSE, COOLER	1	1						
6	1	24321-000350	O-RING, 1AG35.0	1	1						
7	1	26106-080202	BOLT, M8X 20 PLATED	1	1						
8	1	119172-48480	CLAMP, HOSE 48	2	2						
9	1	119581-49700	HOSE, CLUTCH IN	1	1						
10	1	119581-49710	HOSE, CLUTCH OUT	1	1						
11	1	43730-552171	CLIP HOSE,71	2	2						
12	1	43530-500610	JOINT, PIPE 30A	1	1						1
13	1	43662-030031	COCK ASSY, KINGSTON	1	1						1
14	1	119172-48540	CLIP, HOSE 54	4	4						2
15	1	127610-49010	PIPE, WATER	1	1						2

Remarks
(1)Optional parts.
(2)Loose parts.

N:Old $\xleftrightarrow[\text{No}]{\text{Yes}}$ New, Q:Old $\xleftrightarrow[\text{Yes}]{\text{No}}$ New, R:Old $\xleftrightarrow[\text{Yes}]{\text{Yes}}$ New, S:Old $\xleftrightarrow[\text{No}]{\text{No}}$ New, W:Add, Z:Discontinued, F:Interchangeable by set, K:Q'ty Change

Copyright (C) 2017 YANMAR CO., LTD. All RightsReserved.

Fig.34. COOLING PIPE(FRESH WATER)

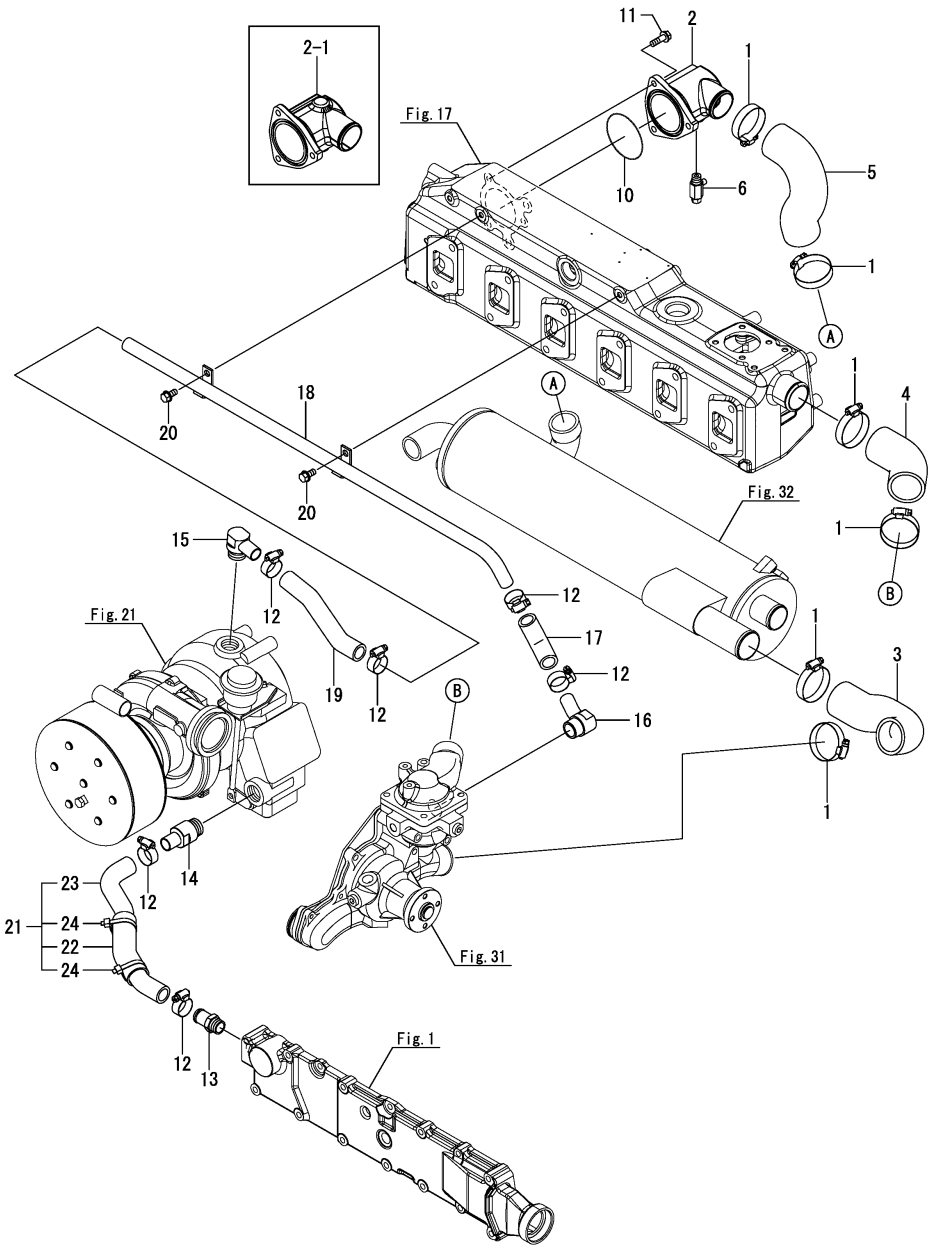

(A)=6LY440 (D)=
(B)=6LY400 (E)=
(C)= (F)=

No.	Lev.	Parts No.	Description	Q'ty (A)	(B)	(C)	(D)	(E)	(F)	I	R
1	1	119172-48540	CLIP, HOSE 54	6	6						
2	1	119581-49150	BEND, COOLING WATER	1	1						
2-1	1	119581-49151	BEND, COOLING WATER	1	1					S	1
	(A=E/#1867)	(B=E/#1864)									
3	1	119574-49231	HOSE, RUBBER	1	1						
4	1	119593-49250	JOINT, RUBBER 45	1	1						
5	1	119581-49270	HOSE, EXH. MANI OUT	1	1						
5-1	1	119581-49271	HOSE, EXH. MANI OUT	1	1					N	
	(A=E/#1867)	(B=E/#1864)									
6	1	119620-49290	COCK ASSY, 1/4	1	1						
10	1	24324-000700	O-RING, 4CG70.0	1	1						
11	1	26106-080252	BOLT, M8X 25 PLATED	3	3						
12	1	119172-48280	CLIP, HOSE 28	6	6						
13	1	124195-49100	JOINT, HOSE	1	1						
14	1	119574-49321	JOINT	1	1						
15	1	119593-49320	JOINT	1	1						
16	1	119581-49420	JOINT, PIPE	1	1						
17	1	119581-49430	HOSE, THERMO IN	1	1						
17-1	1	119581-49431	HOSE, THERMO IN	1	1					N	
	(A=E/#2289)	(B=E/#2262)									
18	1	119581-49440	PIPE, CW T/C OUT	1	1						
18-1	1	119581-49441	PIPE, CW T/C OUT	1	1					N	
	(A=E/#2289)	(B=E/#2262)									
19	1	119581-49450	HOSE, T/C OUT	1	1						
20	1	26106-080162	BOLT, M8X 16 PLATED	2	2						
21	1	119581-49460	HOSE ASSY	1	1						
22	2	119578-39170	PROTECTOR	1	1						
23	2	119581-49410	HOSE, T/C IN	1	1						
24	2	29622-140001	BAND, RF140	2	2						

Remarks
(1)Interchangeable by simultaneous replacement with No.5-1.

N:Old $\xleftarrow[\text{No}]{\text{Yes}}$ New, Q:Old $\xleftarrow[\text{Yes}]{\text{No}}$ New, R:Old $\xleftarrow[\text{Yes}]{\text{Yes}}$ New, S:Old $\xleftarrow[\text{No}]{\text{No}}$ New, W:Add, Z:Discontinued, F:Interchangeable by set, K:Q'ty Change

Copyright (C) 2017 YANMAR CO., LTD. All RightsReserved.

Fig.35. COOLING PIPE(FRESH WATER)(BY-PASS)

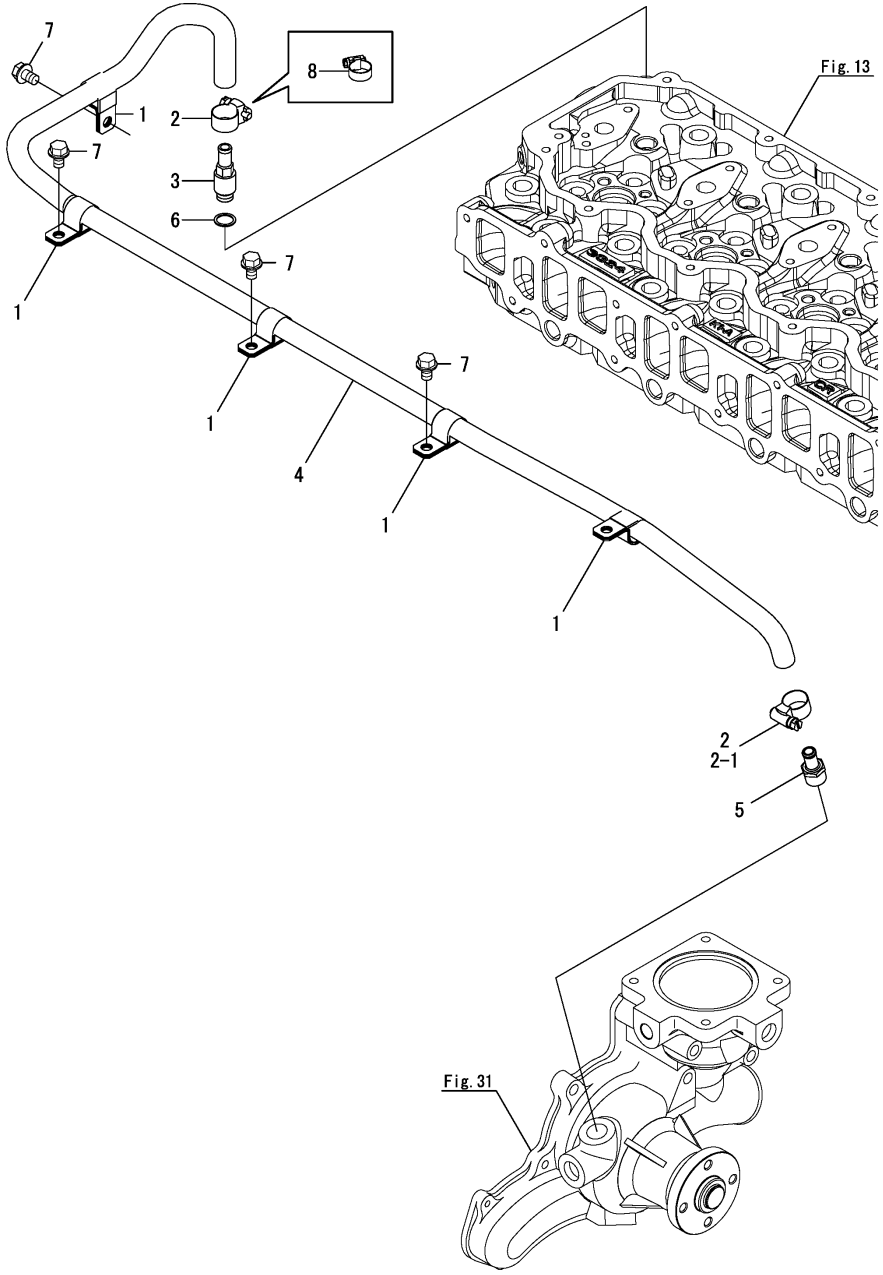

(A)=6LY440 (D)=
(B)=6LY400 (E)=
(C)= (F)=

No.	Lev.	Parts No.	Description	Q'ty (A)	(B)	(C)	(D)	(E)	(F)	I	R
1	1	119778-26660	RETAINER	5	5						
2	1	119172-48190	CLIP, HOSE 19	2	2						
2-1	1	119172-48190	CLIP, HOSE 19	1	1					K	
	(A=*2016.11.)	(B=*2016.11.)									
3	1	119581-49100	JOINT, CW HOSE	1	1						
4	1	119581-49110	HOSE, CW HEAD BYPASS	1	1						
5	1	119581-49120	JOINT, HOSE R3/8	1	1						
6	1	23414-130017	GASKET, 13X1.0	1	1						
7	1	26106-080122	BOLT, M8X 12 PLATED	3	3						
8	1	119172-48130	CLIP, HOSE 13	1	1					W	
	(A=*2016.11.)	(B=*2016.11.)									

N:Old ◄Yes/No► New, Q:Old ◄No/Yes► New, R:Old ◄Yes/Yes► New, S:Old ◄No/No► New, W:Add, Z:Discontinued, F:Interchangeable by set, K:Q'ty Change

Copyright (C) 2017 YANMAR CO., LTD. All RightsReserved.

Fig.36. BILGE PUMP(OPTIONAL)

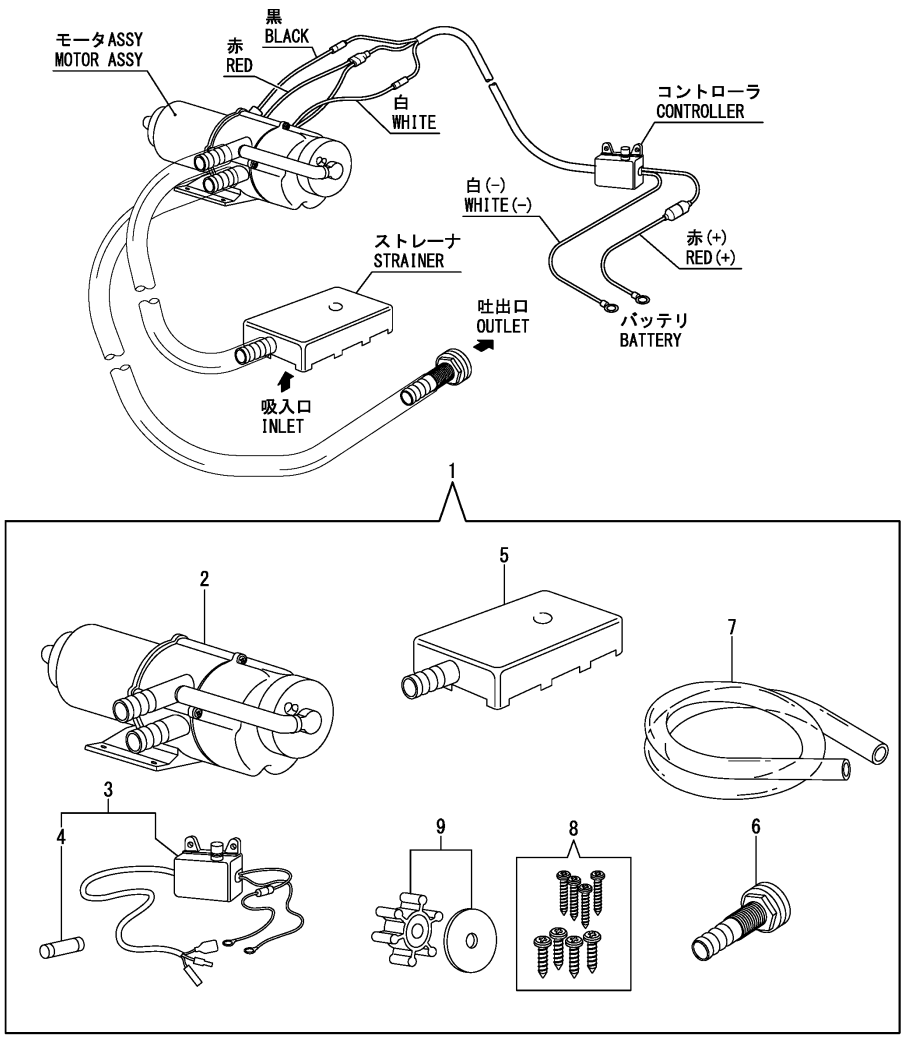

(A)=6LY440
(B)=6LY400
(C)=
(D)=
(E)=
(F)=

No.	Lev.	Parts No.	Description	Q'ty (A)	(B)	(C)	(D)	(E)	(F)	I	R
1	1	977780-01211	PUMP ASSY, BILGE	1	1						
2	2	X0318101004	MOTOR ASSY, BILGE	1	1						
3	2	X158606410X	SWITH	1	1						
4	3	X8636015001	FUSE	1	1						
5	2	X179100022X	STRAINER	1	1						
6	2	X179100100X	PIPE ASSY	1	1						
7	2	X0044021509	HOSE A	1	1						
8	2	X199906101X	SCREW SET	1	1						
9	2	977780-03000	INPELLER	1	1						

N:Old $\xleftrightarrow[\text{No}]{\text{Yes}}$ New, Q:Old $\xleftrightarrow[\text{Yes}]{\text{No}}$ New, R:Old $\xleftrightarrow[\text{Yes}]{\text{Yes}}$ New, S:Old $\xleftrightarrow[\text{No}]{\text{No}}$ New, W:Add, Z:Discontinued, F:Interchangeable by set, K:Q'ty Change

Copyright (C) 2017 YANMAR CO., LTD. All RightsReserved.

Fig.37. FUEL SUPPLY PUMP

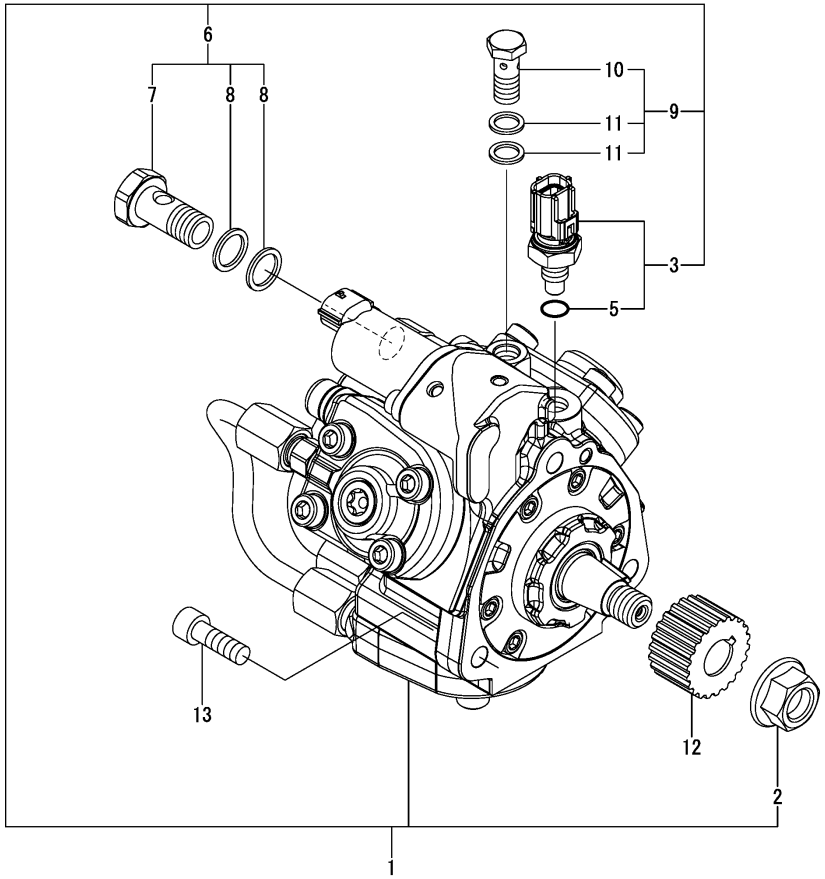

(A)=6LY440
(B)=6LY400
(C)=
(D)=
(E)=
(F)=

No.	Lev.	Parts No.	Description	Q'ty (A)	(B)	(C)	(D)	(E)	(F)	I	R
1	1	119581-51010	PUMP, SUPPLY	1	1						
2	2	119581-51020	NUT, GLANGE M14	1	1						
3	2	129978-51200	SENSOR,TEMP S/A	1	1						
5	3	129978-51220	O-RING, TEMP SENSOR	1	1						
6	2	129978-51300	SCREW KIR,HOLLOW IN	1	1						
7	3	129978-51310	SCREW, HOLLOW IN	1	1						
8	3	129978-51320	WASHER, HOLLOW SCREW	2	2						
9	2	129978-51400	SCREW KIR,HOLLOW OUT	1	1						
10	3	129978-51410	SCREW, HOLLOW OUT	1	1						
11	3	129978-51420	WASHER, HOLLOW SCREW	2	2						
12	1	119581-51100	SPLINE, HP PUMP	1	1						
13	1	26450-080252	BOLT, M8X 25	3	3						

N:Old ◄Yes/No► New, Q:Old ◄No/Yes► New, R:Old ◄Yes/Yes► New, S:Old ◄No/No► New, W:Add, Z:Discontinued, F:Interchangeable by set, K:Q'ty Change

Copyright (C) 2017 YANMAR CO., LTD. All RightsReserved.

Fig.38. FUEL INJECTION VALVE

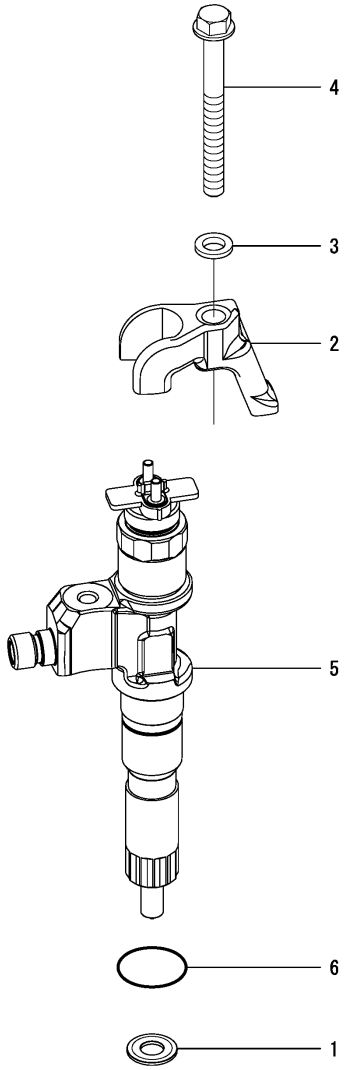

(A)=6LY440
(B)=6LY400
(C)=
(D)=
(E)=
(F)=

No.	Lev.	Parts No.	Description	Q'ty (A)	(B)	(C)	(D)	(E)	(F)	I	R
1	1	127677-11700	GASKET, NOZZLE	6	6						
2	1	119581-11790	RETAINER, INJECTOR	6	6						
2-1	1	119581-11800	RETAINER, INJECTOR	6	6					N	
	(A=E/#1987)	(B=E/#1985)									
3	1	127616-11920	WASHER	6	6						
4	1	123900-13630	BOLT, M8X80	6	6						
5	1	119581-53350	INJECTOR, CR	6	6						
6	1	24326-000250	O-RING, 4DG25.0	6	6						

N:Old $\xleftrightarrow[\text{No}]{\text{Yes}}$ New, Q:Old $\xleftrightarrow[\text{Yes}]{\text{No}}$ New, R:Old $\xleftrightarrow[\text{Yes}]{\text{Yes}}$ New, S:Old $\xleftrightarrow[\text{No}]{\text{No}}$ New, W:Add, Z:Discontinued, F:Interchangeable by set, K:Q'ty Change

Copyright (C) 2017 YANMAR CO., LTD. All RightsReserved.

Fig.39. FUEL INJECTION PIPE

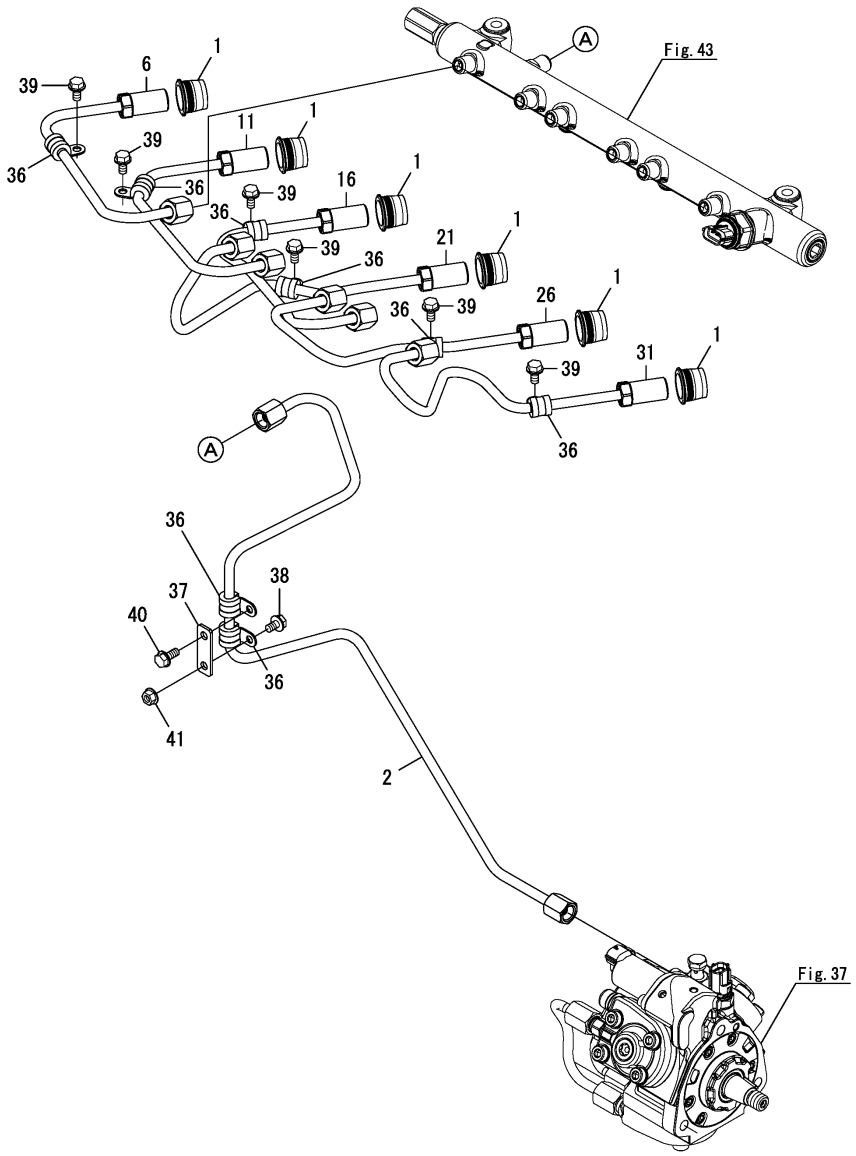

(A)=6LY440
(B)=6LY400
(C)=
(D)=
(E)=
(F)=

No.	Lev.	Parts No.	Description	Q'ty (A)	(B)	(C)	(D)	(E)	(F)	I	R
1	1	119581-11920	SEAL, INJ. PIPE	6	6						
2	1	119581-59070	PIPE ASSY, HIGH-P	1	1						
6	1	119581-59010	PIPE ASSY, INJ. NO.1	1	1						
11	1	119581-59020	PIPE ASSY, INJ. NO.2	1	1						
16	1	119581-59030	PIPE ASSY, INJ. NO.3	1	1						
21	1	119581-59040	PIPE ASSY, INJ. NO.4	1	1						
26	1	119581-59050	PIPE ASSY, INJ. NO.5	1	1						
31	1	119581-59060	PIPE ASSY, INJ. NO.6	1	1						
36	1	119581-59810	CLAMP, PIPE 8	8	8						
37	1	26106-060122	BOLT, M6X 12 PLATED	6	6						
38	1	119581-59830	SUPPORT, CLAMP	1	1						
39	1	26106-060102	BOLT, M6X 10 PLATED	1	1						
40	1	26106-060142	BOLT, M6X 14 PLATED	1	1						
41	1	26366-060002	NUT, M6	1	1						

N:Old $\xleftrightarrow[\text{No}]{\text{Yes}}$ New, Q:Old $\xleftrightarrow[\text{Yes}]{\text{No}}$ New, R:Old $\xleftrightarrow[\text{Yes}]{\text{Yes}}$ New, S:Old $\xleftrightarrow[\text{No}]{\text{No}}$ New, W:Add, Z:Discontinued, F:Interchangeable by set, K:Q'ty Change

Copyright (C) 2017 YANMAR CO., LTD. All RightsReserved.

Fig.40. DRIVING DEVICE(FUEL SUPPLY PUMP)

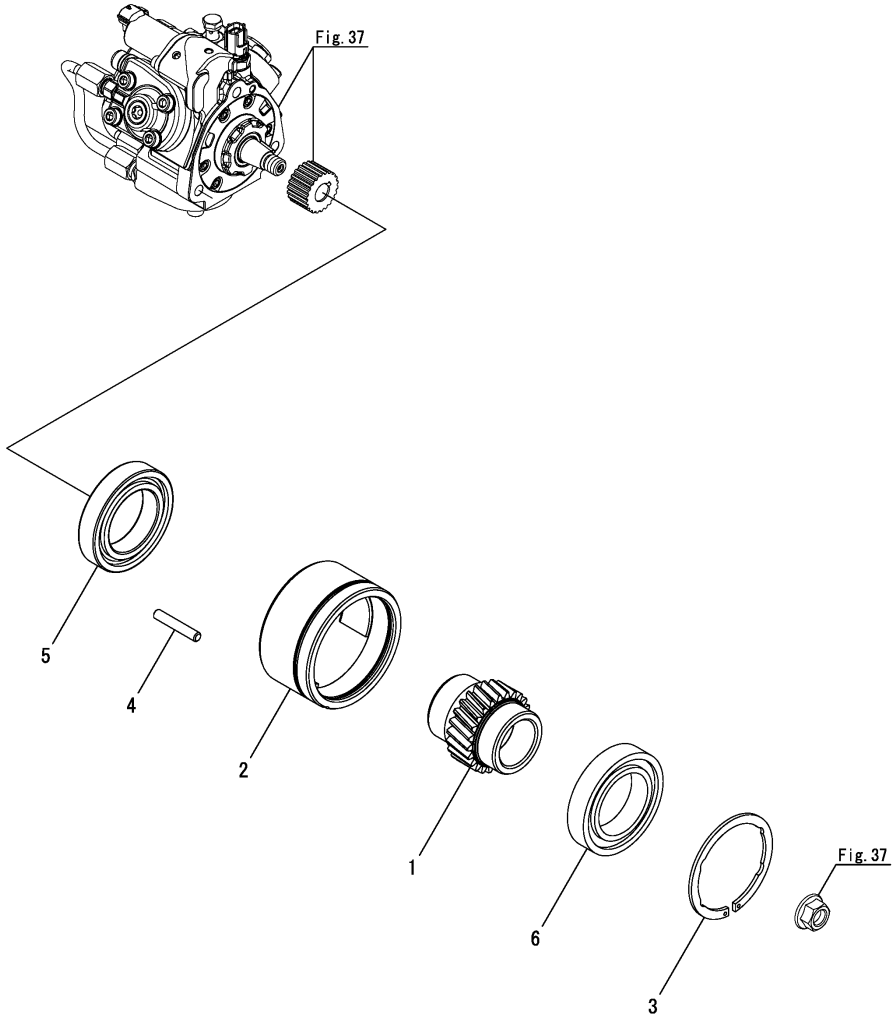

(A)=6LY440
(B)=6LY400
(C)=
(D)=
(E)=
(F)=

No.	Lev.	Parts No.	Description	Q'ty (A)	(B)	(C)	(D)	(E)	(F)	I	R
1	1	119581-54100	SHAFT, HPP DRIVE	1	1						
2	1	119581-54150	SLEEVE,BEARING	1	1						
3	1	22252-000880	RING, 88	1	1						
4	1	22312-080450	PIN, PARALLEL M8X45	1	1						
5	1	24101-060110	BEARING, 6011 C3	1	1						
6	1	24147-010110	BEARING, NU 1011	1	1						

N:Old $\xleftarrow[\text{No}]{\text{Yes}}$ New, Q:Old $\xleftarrow[\text{Yes}]{\text{No}}$ New, R:Old $\xleftarrow[\text{Yes}]{\text{Yes}}$ New, S:Old $\xleftarrow[\text{No}]{\text{No}}$ New, W:Add, Z:Discontinued, F:Interchangeable by set, K:Q'ty Change

Copyright (C) 2017 YANMAR CO., LTD. All RightsReserved.

Fig.41. FUEL FILTER

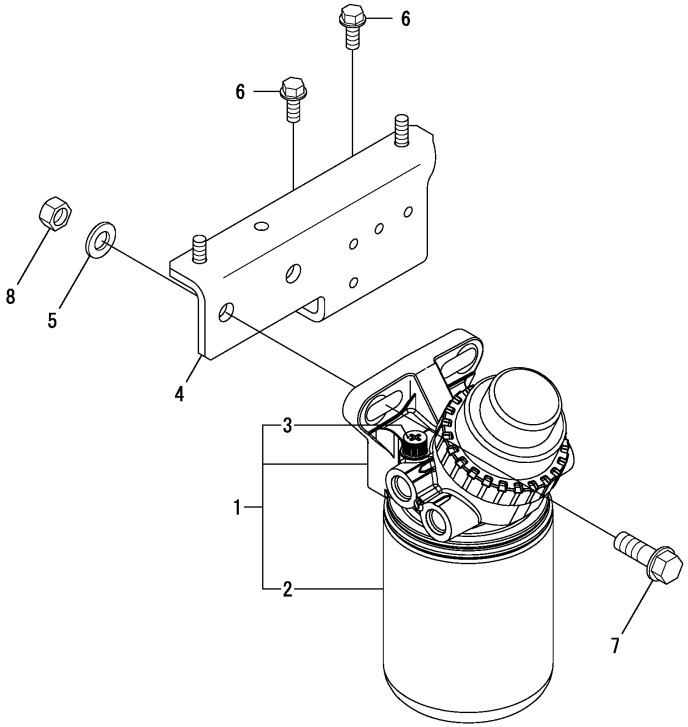

(A)=6LY440
(B)=6LY400
(C)=
(D)=
(E)=
(F)=

No.	Lev.	Parts No.	Description	Q'ty (A)	(B)	(C)	(D)	(E)	(F)	I	R
1	1	119581-55150	FILTER ASSY, FO	1	1						
2	2	119581-55160	ELEMENT ASSY, FO	1	1						
3	2	119581-55170	SCREW	1	1						
4	1	119581-55190	BRACKET, FO FILTER	1	1						
5	1	22137-120000	WASHER, 12	2	2						
6	1	26106-080202	BOLT, M8X 20 PLATED	3	3						
7	1	26106-120352	BOLT, M12X 35 PLATED	2	2						
8	1	26716-120002	NUT, M12	2	2						

N:Old $\overset{\text{Yes}}{\underset{\text{No}}{\leftrightarrows}}$ New, Q:Old $\overset{\text{No}}{\underset{\text{Yes}}{\leftrightarrows}}$ New, R:Old $\overset{\text{Yes}}{\underset{\text{Yes}}{\leftrightarrows}}$ New, S:Old $\overset{\text{No}}{\underset{\text{No}}{\leftrightarrows}}$ New, W:Add, Z:Discontinued, F:Interchangeable by set, K:Q'ty Change

Copyright (C) 2017 YANMAR CO., LTD. All RightsReserved.

Fig.42. WATER SEPARATOR(OPTIONAL)

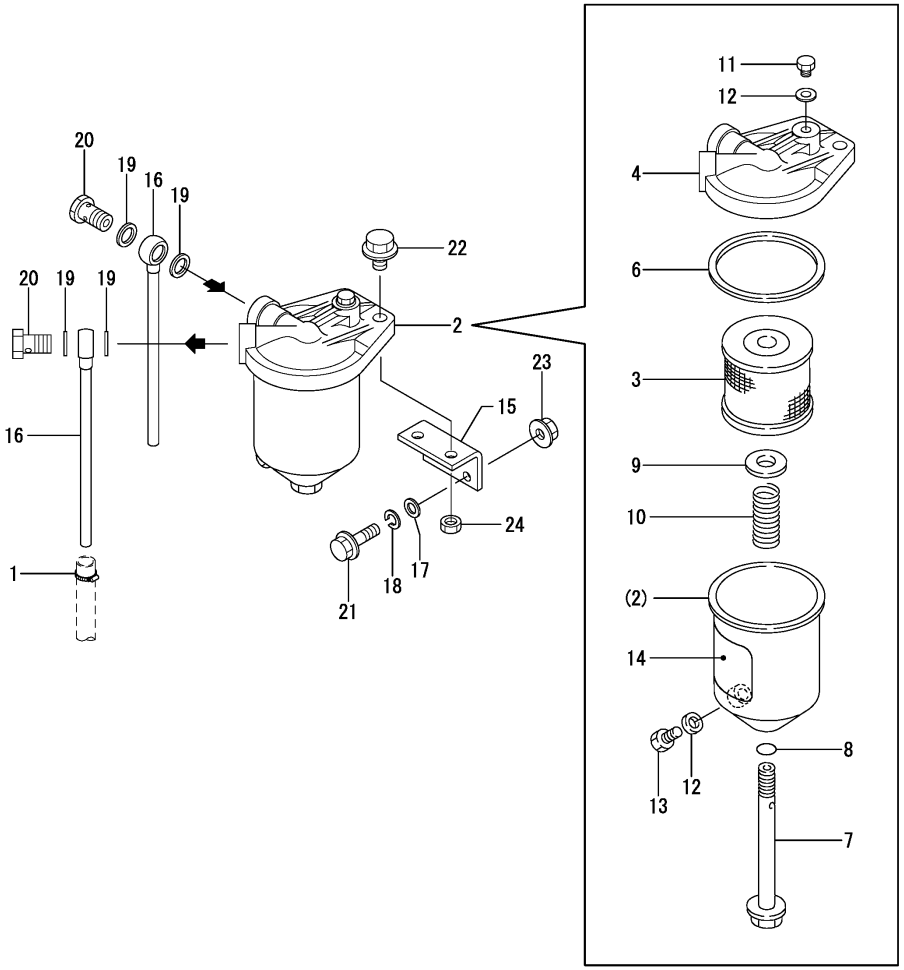

(A)=6LY440
(B)=6LY400
(C)=
(D)=
(E)=
(F)=

No.	Lev.	Parts No.	Description	Q'ty (A)	(B)	(C)	(D)	(E)	(F)	I	R
1	1	119172-48190	CLIP, HOSE 19	2	2						
2	1	120324-55751	SEPARATOR ASSY	1	1						
3	2	120324-55760	ELEMENT	1	1						
4	2	X2740134002	COVER ASSY	1	1						
6	2	X0582810173	GASKET	1	1						
7	2	X0311121522	BOLT	1	1						
8	2	X0580121073	O-RING, 1A P 12.0	1	1						
9	2	X0300120414	SEAT, SPRING	1	1						
10	2	X0600160122	SPRING	1	1						
11	2	X0314080110	PLUG	1	1						
12	2	X0588080273	WASHER	2	2						
13	2	X0313080922	BOLT	1	1						
14	2	X0993071171	LABEL, CAUTION	1	1						
15	1	123672-55811	BRACKET	1	1						
16	1	123325-59420	PIPE ASSY, FUEL	2	2						
17	1	22137-080000	WASHER, 8	2	2						
18	1	22217-080000	WASHER, SPRING 8	2	2						
19	1	23414-140000	GASKET, 14X1.0	4	4						
20	1	23857-080000	BOLT, JOINT 8	2	2						
21	1	26106-080402	BOLT, M8X 40 PLATED	2	2						
22	1	26106-100202	BOLT, M10X 20 PLATED	2	2						
23	1	26306-080002	NUT, M8	2	2						
24	1	26706-100002	NUT, M10	2	2						

N:Old $\overset{\text{Yes}}{\underset{\text{No}}{\leftrightarrows}}$ New, Q:Old $\overset{\text{No}}{\underset{\text{Yes}}{\leftrightarrows}}$ New, R:Old $\overset{\text{Yes}}{\underset{\text{Yes}}{\leftrightarrows}}$ New, S:Old $\overset{\text{No}}{\underset{\text{No}}{\leftrightarrows}}$ New, W:Add, Z:Discontinued, F:Interchangeable by set, K:Q'ty Change

Copyright (C) 2017 YANMAR CO., LTD. All RightsReserved.

Fig.43. COMMON RAIL

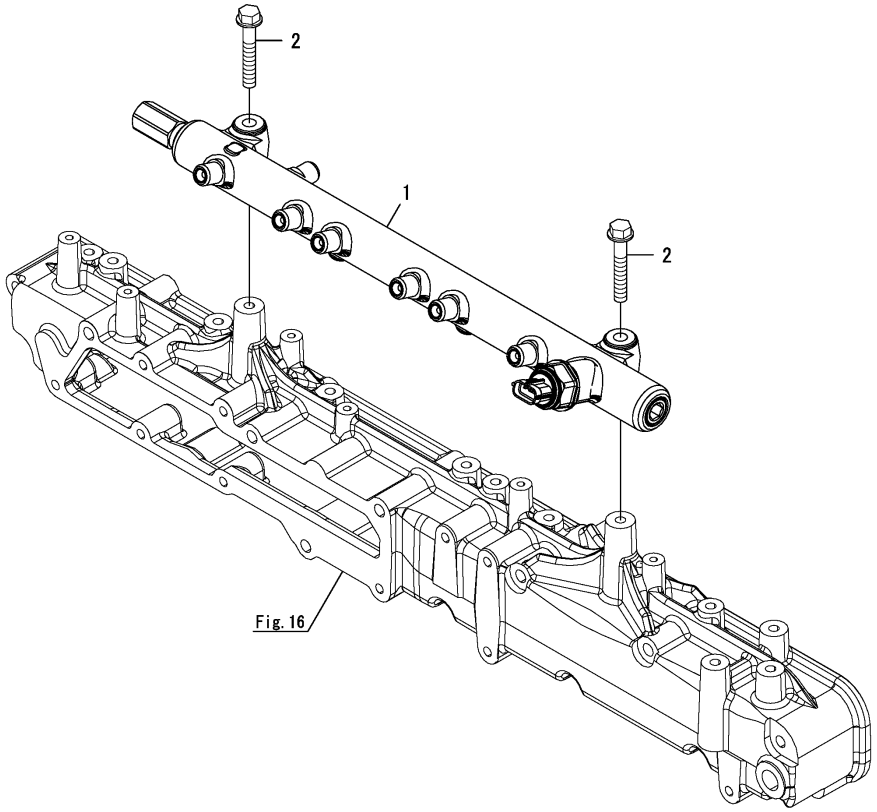

(A)=6LY440
(B)=6LY400
(C)=
(D)=
(E)=
(F)=

No.	Lev.	Parts No.	Description	Q'ty (A)	(B)	(C)	(D)	(E)	(F)	I	R
1	1	119581-57500	RAIL, CR	1	1						
2	1	26106-080502	BOLT, M8X 50 PLATED	2	2						

N:Old ◄Yes/No► New, Q:Old ◄No/Yes► New, R:Old ◄Yes/Yes► New, S:Old ◄No/No► New, W:Add, Z:Discontinued, F:Interchangeable by set, K:Q'ty Change

Copyright (C) 2017 YANMAR CO., LTD. All RightsReserved.

Fig.44. FUEL PIPE

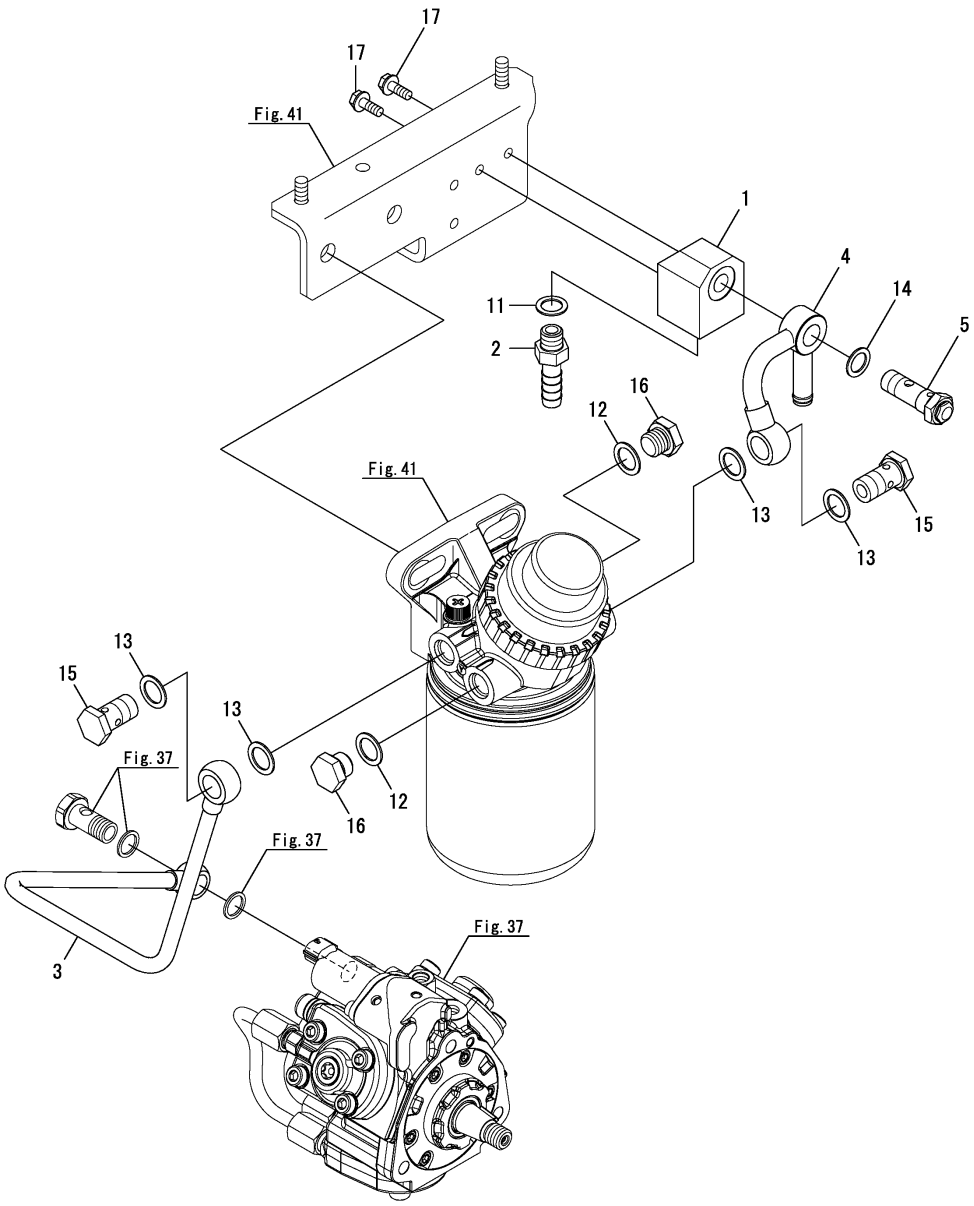

(A)=6LY440
(B)=6LY400
(C)=
(D)=
(E)=
(F)=

No.	Lev.	Parts No.	Description	Q'ty (A)	(B)	(C)	(D)	(E)	(F)	I	R
1	1	119581-55500	BLOCK, FO	1	1						
2	1	119581-55730	NIPPLE, FO RETURN	1	1						
3	1	119581-59300	PIPE, HPP INLET	1	1						
4	1	119581-59521	PIPE, FO INLET	1	1						
5	1	119799-59601	RELIEF VALVE, FO	1	1						
11	1	22190-140006	WASHER, SEAL 14	1	1						
12	1	22190-160002	WASHER, SEAL 16	2	2						
13	1	22190-160006	WASHER, SEAL 16	4	4						
14	1	23414-150000	GASKET, 15X1.0	1	1						
15	1	23851-100000	JOINT BOLT 10	2	2						
16	1	23881-160002	PLUG	2	2						
17	1	26106-060162	BOLT, M6X 16 PLATED	2	2						

N:Old ◄Yes/No► New, Q:Old ◄No/Yes► New, R:Old ◄Yes/Yes► New, S:Old ◄No/No► New, W:Add, Z:Discontinued, F:Interchangeable by set, K:Q'ty Change

Copyright (C) 2017 YANMAR CO., LTD. All RightsReserved.

Fig.45. FUEL PIPE(COMMON RAIL RETURN)

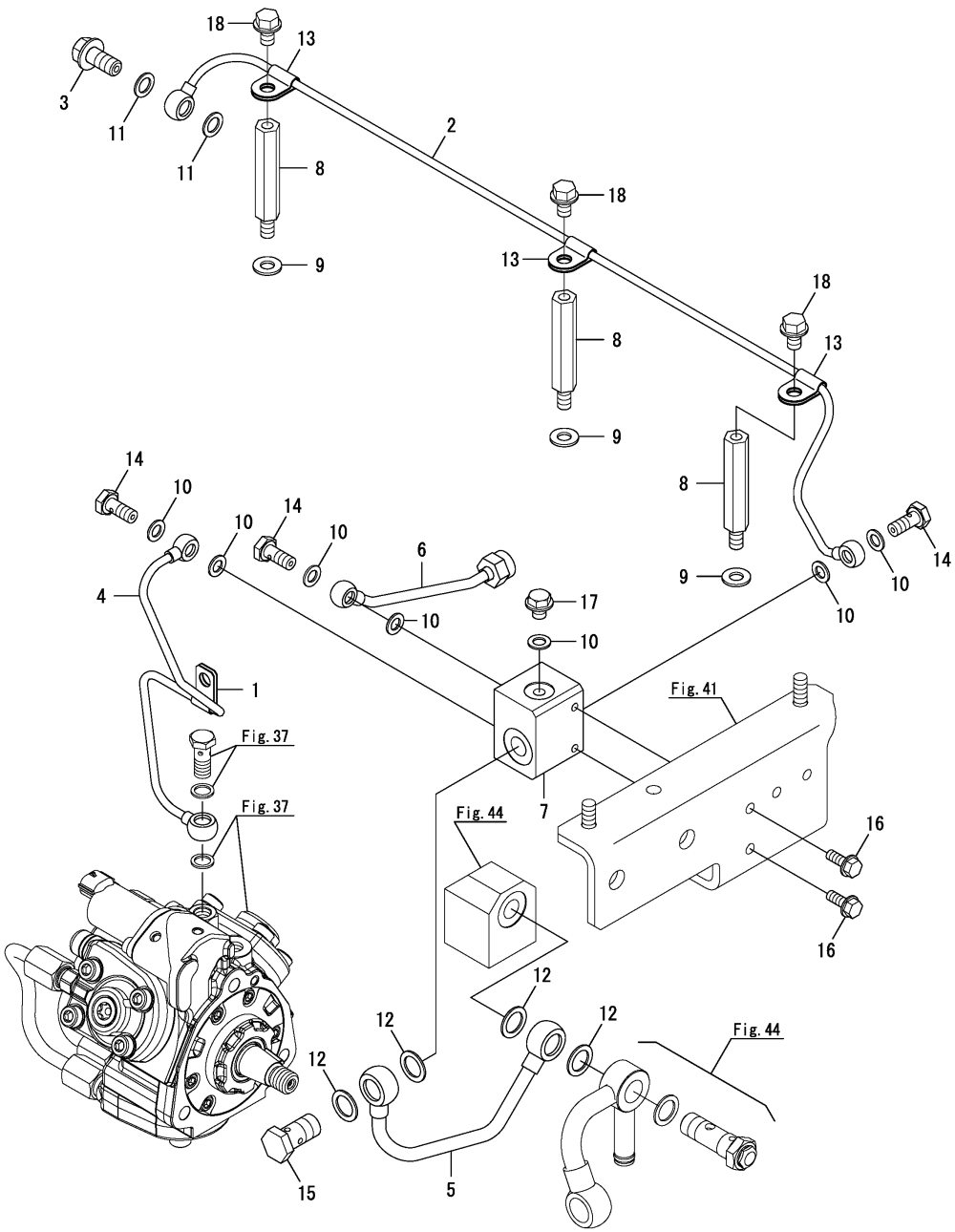

(A)=6LY440 (D)=
(B)=6LY400 (E)=
(C)= (F)=

No.	Lev.	Parts No.	Description	Q'ty (A)	(B)	(C)	(D)	(E)	(F)	I	R
1	1	124450-39240	RETAINER, PIPE	1	1						
2	1	119581-59200	PIPE ASSY, CR RETURN	1	1						
3	1	119581-59210	BOLT, PIPE JOINT	1	1						
4	1	119581-59220	PIPE ASSY, HPP LEAK	1	1						
5	1	119581-59241	PIPE ASSY, FO RETURN	1	1						
6	1	119581-59260	PIPE ASSY, INJ. LEAK	1	1						
7	1	119581-59500	MOUNT, FUEL PIPES	1	1						
8	1	126630-77810	BOLT	3	3						
9	1	22137-080000	WASHER, 8	3	3						
10	1	22190-080006	WASHER, SEAL 8	7	7						
11	1	22190-100006	WASHER, SEAL 10	2	2						
12	1	22190-140006	WASHER, SEAL 14	4	4						
13	1	23297-060081	CLAMP, A6X 8	3	3						
14	1	23851-030000	JOINT BOLT 3	3	3						
15	1	23851-080000	JOIT BOLT 8	1	1						
16	1	26106-060162	BOLT, M6X 16 PLATED	2	2						
17	1	26106-080102	BOLT, M8X 10 PLATED	1	1						
18	1	26106-080122	BOLT, M8X 12 PLATED	3	3						

N:Old $\xleftrightarrow[\text{No}]{\text{Yes}}$ New, Q:Old $\xleftrightarrow[\text{Yes}]{\text{No}}$ New, R:Old $\xleftrightarrow[\text{Yes}]{\text{Yes}}$ New, S:Old $\xleftrightarrow[\text{No}]{\text{No}}$ New, W:Add, Z:Discontinued, F:Interchangeable by set, K:Q'ty Change

Copyright (C) 2017 YANMAR CO., LTD. All RightsReserved.

Fig.46. FUEL PIPE(INJECTION VALVE RETURN)

(A)=6LY440
(B)=6LY400
(C)=
(D)=
(E)=
(F)=

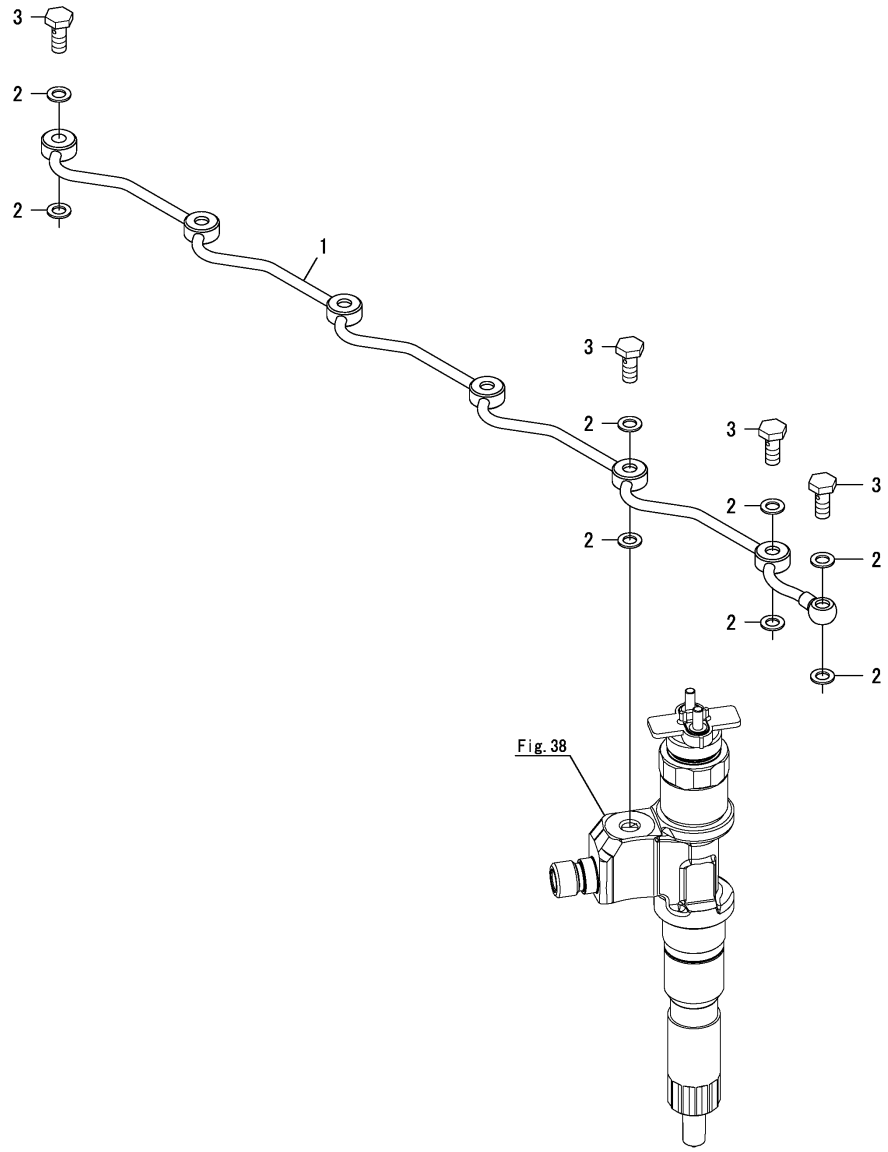

No.	Lev.	Parts No.	Description	Q'ty (A)	(B)	(C)	(D)	(E)	(F)	I	R
1	1	119581-59270	PIPE ASSY, INJ. LEAK	1	1						
2	1	22190-080006	WASHER, SEAL 8	14	14						
3	1	23851-030000	JOINT BOLT 3	7	7						

N:Old ◄Yes/No► New, Q:Old ◄No/Yes► New, R:Old ◄Yes/Yes► New, S:Old ◄No/No► New, W:Add, Z:Discontinued, F:Interchangeable by set, K:Q'ty Change

Copyright (C) 2017 YANMAR CO., LTD. All RightsReserved.

Fig.47. ELECTRONIC CONTROL UNIT(ECU)

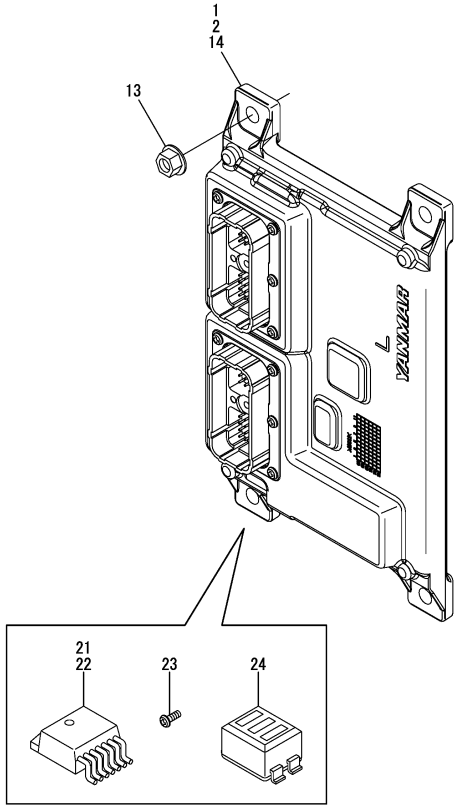

(A)=6LY440
(B)=6LY400
(C)=
(D)=
(E)=
(F)=

No.	Lev.	Parts No.	Description	Q'ty (A)	(B)	(C)	(D)	(E)	(F)	I	R
1	1	119581-75010	ECU ASSY,6LY440	1							1
2	1	119581-75020	ECU ASSY,6LY400		1						1
13	1	26366-080002	NUT, M8	4	4						
14	1	119581-75900	ECU,SERVICE	1	1						2
21	1	119581-75810	REGULATOR,ECU	2	2						3
22	1	119581-75820	REGULATOR,ECU	1	1						4
23	1	119581-75830	SCREW,TORX	12	12						
24	1	119581-75840	FILTER,COMMON MODE	2	2						

Remarks
(1)Eco ECU
This part cannot be ordered.
Replace the part using a Service ECU with the proper engine information installed.
(2)Service ECU
If the proper information is not installed, the engine will not operate.
To install proper information, go to an authorized distributor.
(3)Output voltage : 50V
(4)Output voltage : 33V

N:Old $\xleftrightarrow[\text{No}]{\text{Yes}}$ New, Q:Old $\xleftrightarrow[\text{Yes}]{\text{No}}$ New, R:Old $\xleftrightarrow[\text{Yes}]{\text{Yes}}$ New, S:Old $\xleftrightarrow[\text{No}]{\text{No}}$ New, W:Add, Z:Discontinued, F:Interchangeable by set, K:Q'ty Change

Copyright (C) 2017 YANMAR CO., LTD. All RightsReserved.

Fig.48. BRACKET(ECU)

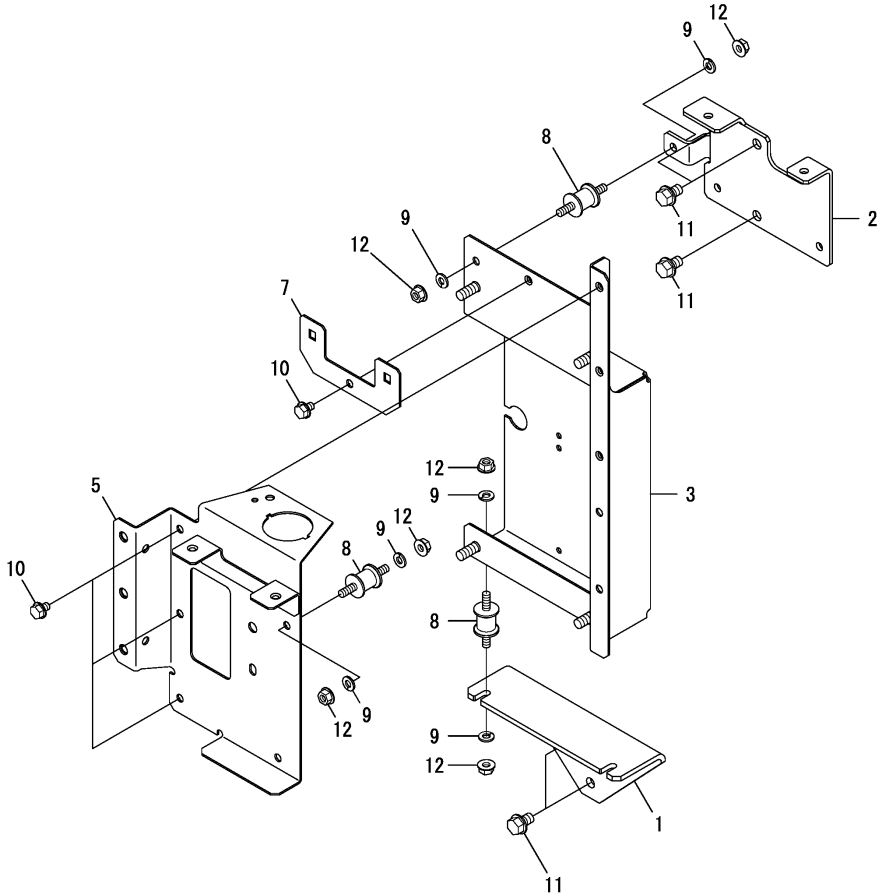

(A)=6LY440
(B)=6LY400
(C)=
(D)=
(E)=
(F)=

No.	Lev.	Parts No.	Description	Q'ty (A)	(B)	(C)	(D)	(E)	(F)	I	R
1	1	119581-77880	STAGE,BRACKET ECU B	1	1						
2	1	119581-77890	STAGE,BRACKET ECU A	1	1						
3	1	119581-77901	BRACKET,ECU	1	1						
5	1	119581-77910	BRACKET, CONNECTOR	1	1						
7	1	119581-77920	BRACKET,RELAY	1	1						
8	1	119175-91050	ABSORBER	4	4						
9	1	22217-060000	WASHER, SPRING 6	8	8						
10	1	26106-060082	BOLT, M6X 8 PLATED	4	4						
11	1	26106-080122	BOLT, M8X 12 PLATED	5	5						
12	1	26366-060002	NUT, M6	8	8						

N:Old ◄Yes/No► New, Q:Old ◄No/Yes► New, R:Old ◄Yes/Yes► New, S:Old ◄No/No► New, W:Add, Z:Discontinued, F:Interchangeable by set, K:Q'ty Change

Copyright (C) 2017 YANMAR CO., LTD. All RightsReserved.

Fig.49. ELECTRONIC DRIVE UNIT(EDU)

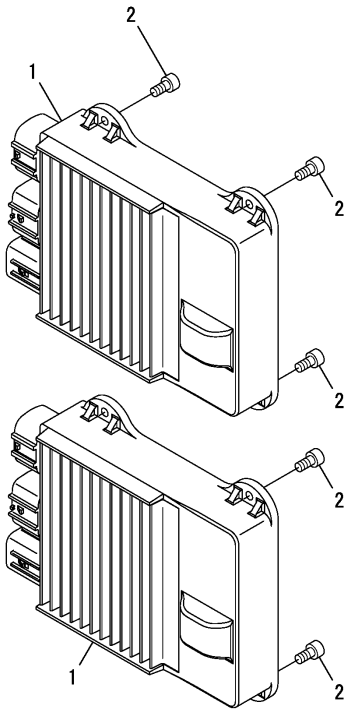

(A)=6LY440
(B)=6LY400
(C)=
(D)=
(E)=
(F)=

No.	Lev.	Parts No.	Description	Q'ty (A)	(B)	(C)	(D)	(E)	(F)	I	R
1	1	119581-75200	EDU,INJECTOR	2	2						
2	1	26450-040082	BOLT, M4X 8	8	8						

N:Old $\xleftarrow[\text{No}]{\text{Yes}}$ New, Q:Old $\xleftarrow[\text{Yes}]{\text{No}}$ New, R:Old $\xleftarrow[\text{Yes}]{\text{Yes}}$ New, S:Old $\xleftarrow[\text{No}]{\text{No}}$ New, W:Add, Z:Discontinued, F:Interchangeable by set, K:Q'ty Change

Copyright (C) 2017 YANMAR CO., LTD. All RightsReserved.

Fig.50. STARTER MOTOR

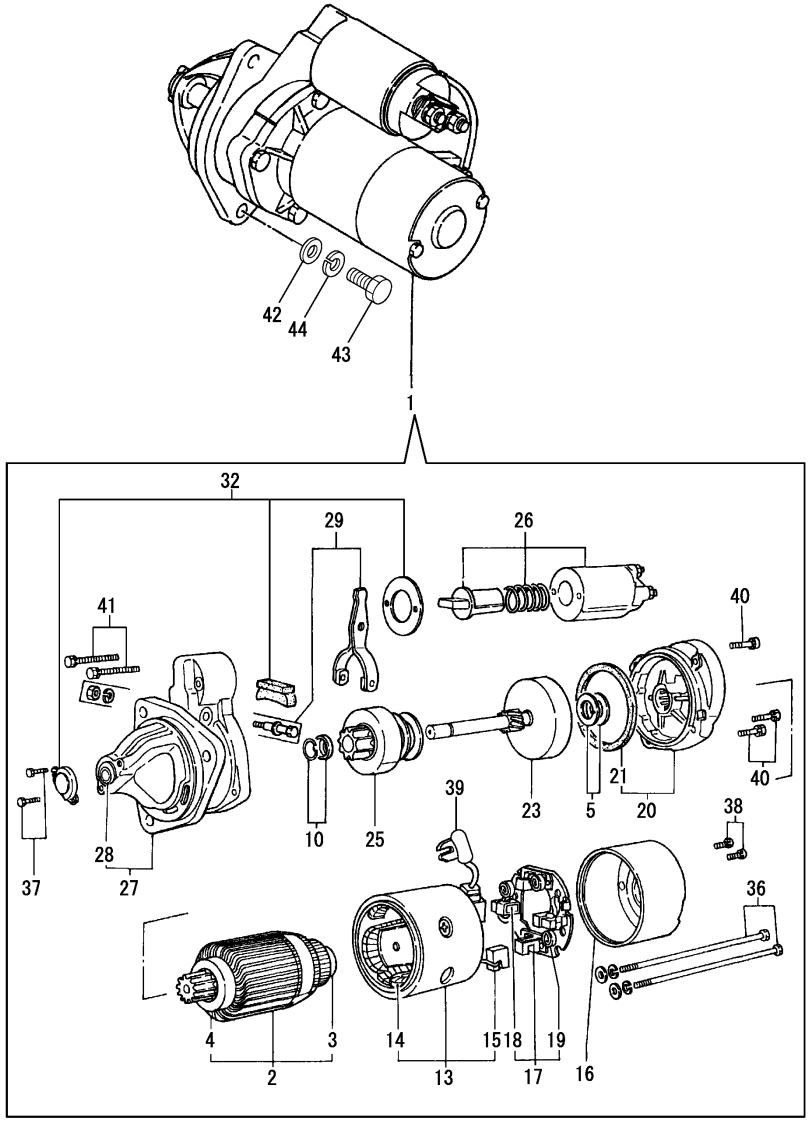

(A)=6LY440
(B)=6LY400
(C)=
(D)=
(E)=
(F)=

No.	Lev.	Parts No.	Description	Q'ty (A)	(B)	(C)	(D)	(E)	(F)	I	R
1	1	124610-77019	STARTING MOTOR	1	1						
2	2	121254-77402	ARMATURE ASSY	1	1						
3	3	121254-77410	BALL BEARING	1	1						
4	3	121254-77420	BALL BEARING	1	1						
5	2	121254-77430	WASHER KIT, THRUST	1	1						
10	2	121254-77480	STOPPER KIT, PINION	1	1						
13	2	121254-77511	COIL ASSY, FIELD	1	1						
14	3	121254-77521	COIL ASSY, FIELD	1	1						
15	4	121254-77541	BRUSH (+)	2	2						
16	2	124610-77550	REAR COVER ASSY	1	1						
17	2	121254-77571	HOLDER ASSY	1	1						
18	3	121254-77581	BRUSH, -	2	2						
19	3	121254-77590	SPRING, BRUSH	4	4						
20	2	121254-77600	BEARING ASSY, CENTER	1	1						
21	3	121254-77610	SEAL, OIL	1	1						
23	2	124610-77640	SHAFT ASSY, GEAR	1	1						
25	2	124610-77660	PINION ASSY	1	1						
26	2	121254-77671	SWITCH, MAGNETIC	1	1						
27	2	X213046003	HOUSING ASSY, GEAR	1	1						
28	3	124610-77690	METAL, GEAR CASE	1	1						
29	2	121254-77700	LEVER SET, SHIFT	1	1						
32	2	121254-77730	DUST COVER SET	1	1						
36	2	121254-77770	BOLT, THROUGH	2	2						
37	2	121254-77780	SCREW 5	2	2						
38	2	121254-77790	SCREW 4	2	2						
39	2	121254-77810	COVER, TERMINAL	1	1						
40	2	26106-060302	BOLT, M6X 30 PLATED	3	3						
41	2	26106-060452	BOLT, M6X 45 PLATED	2	2						
42	1	22137-120000	WASHER, 12	3	3						
43	1	26116-120352	BOLT, M12X 35 PLATED	3	3						
44	1	22217-120000	WASHER, SPRING 12	3	3						

N:Old $\overset{\text{Yes}}{\underset{\text{No}}{\leftrightarrows}}$ New, Q:Old $\overset{\text{No}}{\underset{\text{Yes}}{\leftrightarrows}}$ New, R:Old $\overset{\text{Yes}}{\underset{\text{Yes}}{\leftrightarrows}}$ New, S:Old $\overset{\text{No}}{\underset{\text{No}}{\leftrightarrows}}$ New, W:Add, Z:Discontinued, F:Interchangeable by set, K:Q'ty Change

Copyright (C) 2017 YANMAR CO., LTD. All RightsReserved.

Fig.51. GENERATOR(BOSCH)

(A)=6LY440
(B)=6LY400
(C)=
(D)=
(E)=
(F)=

No.	Lev.	Parts No.	Description	Q'ty (A)	(B)	(C)	(D)	(E)	(F)	I	R
1	1	119581-77200	SPACER, EARTH FLOAT	2	2						
4	1	129908-77200	ALTERNATOR 12V	1	1						
5	2	129908-77710	BEARING, BALL FR	1	1						
6	2	129908-77720	ROTOR	1	1						
7	2	129908-77730	BEARING, BALL RR	1	1						
8	2	129908-77740	RECTIFIER	1	1						
9	2	129908-77750	REGULATOR	1	1						
10	2	129908-77760	STATOR	1	1						
11	2	129908-77770	PROTECTOR	1	1						
12	1	119581-77230	SPACER, EARTH FLOAT	2	2						
15	1	119581-77300	WASHER	2	2						
16	1	119581-77330	ADJUSTER, BELT	1	1						
17	1	119581-77350	BRACKET, ALTERNATOR	1	1						
17-1	1	119581-77351	BRACKET, ALTERNATOR	1	1					F	1
	(A=E/#1716)	(B=*2016.02.)									
18	1	26106-080202	BOLT, M8X 20 PLATED	3	3						
19	1	26106-080222	BOLT, M8X 22 PLATED	1	1						
20	1	26106-080454	BOLT, M8X 45 PLATED	1	1						
21	1	26106-101052	BOLT, M10X105 PLATED	1	1						
22	1	26306-080002	NUT, M8	1	1						
23	1	26306-100002	NUT, M10	1	1						
24	1	119581-77290	WASHER	1	1					W	1
	(A=E/#1716)	(B=*2016.02.)									

Remarks
(1)Interchangeable by simultaneous replacement with No.17-1 & 24.

N:Old ◄Yes/No► New, Q:Old ◄No/Yes► New, R:Old ◄Yes/Yes► New, S:Old ◄No/No► New, W:Add, Z:Discontinued, F:Interchangeable by set, K:Q'ty Change

Copyright (C) 2017 YANMAR CO., LTD. All RightsReserved.

Fig.63. (51A)GENERATOR(DENSO)

(A)=6LY440
(B)=6LY400
(C)=
(D)=
(E)=
(F)=

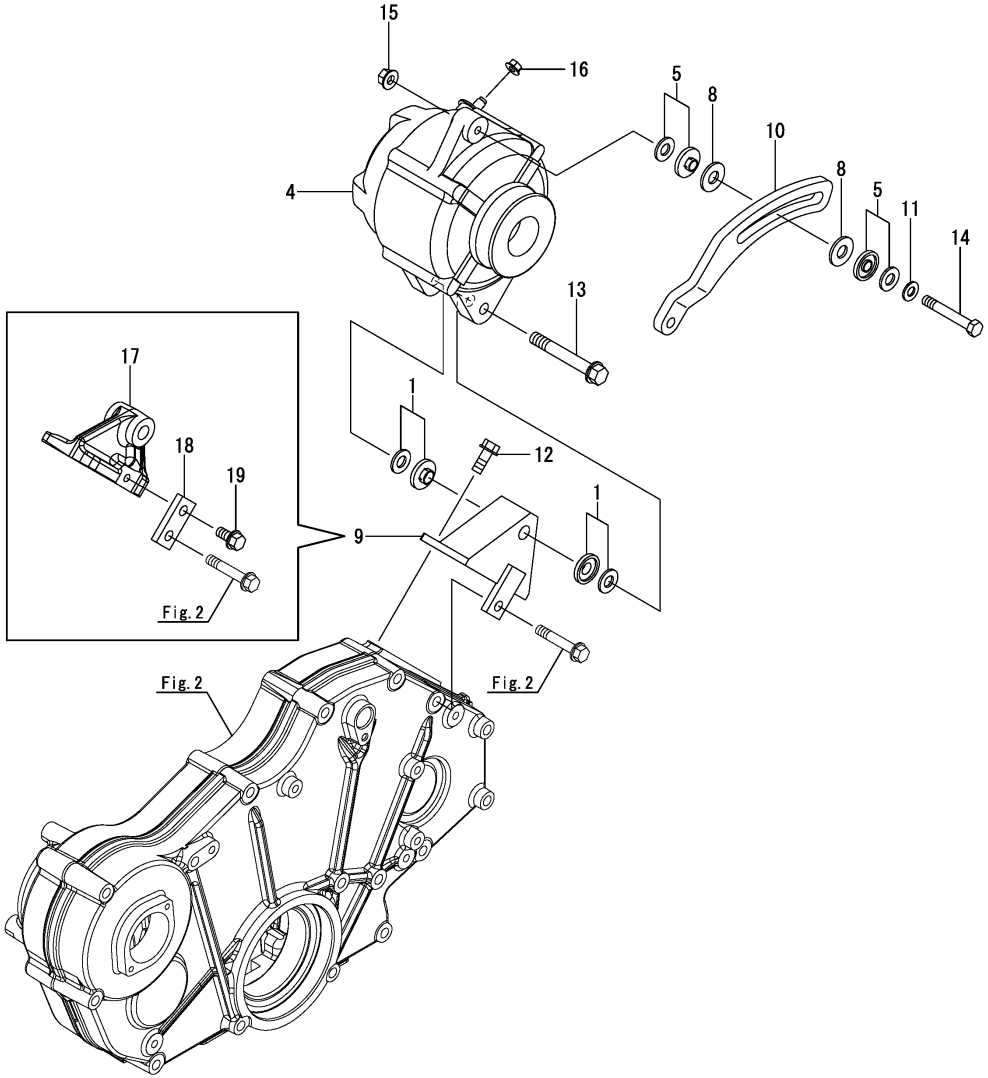

No.	Lev.	Parts No.	Description	Q'ty (A)	(B)	(C)	(D)	(E)	(F)	I	R
1	1	119581-77200	SPACER, EARTH FLOAT	2	2						
4	1	129978-77200	GENERATOR, 12V-120A	1	1						
5	1	119581-77230	SPACER, EARTH FLOAT	2	2						
8	1	119581-77300	WASHER	2	2						
9	1	119581-77310	BRACKET, ALTERNATOR	1	1					Z	
	(A=E/#2109)	(B=E/#2111)									
10	1	119581-77400	ADJUSTER, BELT	1	1						
10-1	1	119581-77401	ADJUSTER, BELT	1	1					R	
	(A=E/#2338)	(B=E/#2377)									
11	1	22137-080000	WASHER, 8	1	1						
12	1	26106-080202	BOLT, M8X 20 PLATED	3	3						
13	1	26106-100702	BOLT, M10X 70 PLATED	1	1						
14	1	26116-080554	BOLT, M8X 55 PLATED	1	1						
15	1	26306-080002	NUT, M8	1	1						
16	1	26366-060002	NUT, M6	1	1						
17	1	119581-77130	BRACKET, ALTERNATOR	1	1					W	
	(A=E/#2109)	(B=E/#2111)									
18	1	119581-77730	STAY, BRACKET	1	1					W	
	(A=E/#2109)	(B=E/#2111)									
19	1	26106-080162	BOLT, M8X 16 PLATED	1	1					W	
	(A=E/#2109)	(B=E/#2111)									

N:Old ◄Yes/No► New, Q:Old ◄No/Yes► New, R:Old ◄Yes/Yes► New, S:Old ◄No/No► New, W:Add, Z:Discontinued, F:Interchangeable by set, K:Q'ty Change

Copyright (C) 2017 YANMAR CO., LTD. All RightsReserved.

Fig.64. (51B)GENERATOR KIT(2ND)(BOSCH)(OPTIONAL)

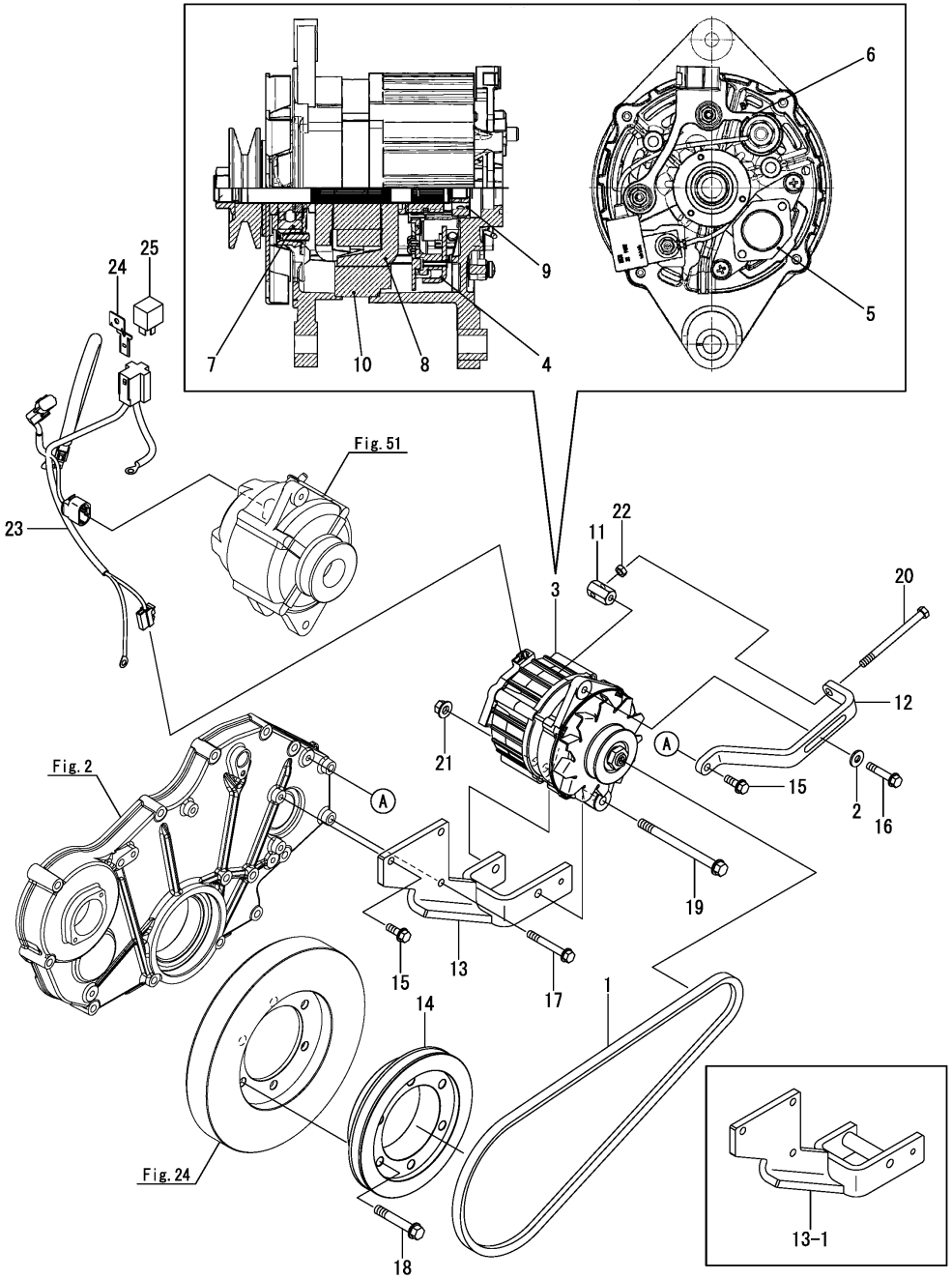

(A)=6LY440 (D)=
(B)=6LY400 (E)=
(C)= (F)=

No.	Lev.	Parts No.	Description	Q'ty (A)	(B)	(C)	(D)	(E)	(F)	I	R
1	1	129963-42290	V-BELT, A42.5	1	1						
2	1	106100-55800	WASHER	1	1						
3	1	119195-77200	ALTERNATOR, 24V-45A	1	1						
4	2	119195-77700	RECTIFIER	1	1						
5	2	119195-77710	REGULATOR	1	1						
6	2	119195-77720	PROTECTOR	1	1						
7	2	129908-77780	BEARING, BALL FR	1	1						
8	2	129908-77790	ROTOR	1	1						
9	2	129908-77800	BEARING, BALL RR	1	1						
10	2	129908-77830	STATOR	1	1						
11	1	119581-77650	NUT, ADJUST 2ND ALT	1	1						
12	1	119581-77660	ADJUSTER, BELT 24V	1	1						
13	1	119581-77670	BRACKET,2ND ALT 24V	1	1						
13-1	1	119581-77671	BRACKET,2ND ALT 24V	1	1					N	
	(A=E/#2413)	(B=*2017.04.)									
14	1	119581-77690	V-PULLEY, 2ND ALT 24	1	1						
15	1	26106-080222	BOLT, M8X 22 PLATED	2	2						
16	1	26106-080404	BOLT, M8X 40	1	1						
17	1	26106-080602	BOLT, M8X 60 PLATED	2	2						
18	1	26106-100602	BOLT, M10X 60 PLATED	6	6						
19	1	26106-101252	BOLT M10X125	1	1						
20	1	26116-081004	BOLT, M8X100 PLATED	1	1						
21	1	26306-100002	NUT, M10	1	1						
22	1	26756-080002	NUT, LOCK M8	1	1						
23	1	119581-77100	HARNESS, 2ND ALT 24V	1	1					W	
	(A=E/#2413)	(B=*2017.03.)									
24	1	129927-77910	BRACKET, CONNECTOR	1	1					W	
	(A=E/#2413)	(B=*2017.03.)									
25	1	129927-77920	RELAY, ISO 70A	1	1					W	
	(A=E/#2413)	(B=*2017.03.)									

N:Old $\xleftarrow[\text{No}]{\text{Yes}}$ New, Q:Old $\xleftarrow[\text{Yes}]{\text{No}}$ New, R:Old $\xleftrightarrow[\text{Yes}]{\text{Yes}}$ New, S:Old $\xleftrightarrow[\text{No}]{\text{No}}$ New, W:Add, Z:Discontinued, F:Interchangeable by set, K:Q'ty Change

Copyright (C) 2017 YANMAR CO., LTD. All RightsReserved.

Fig.65. (51C)GENERATOR KIT(2ND)(DENSO)(OPTIONAL)

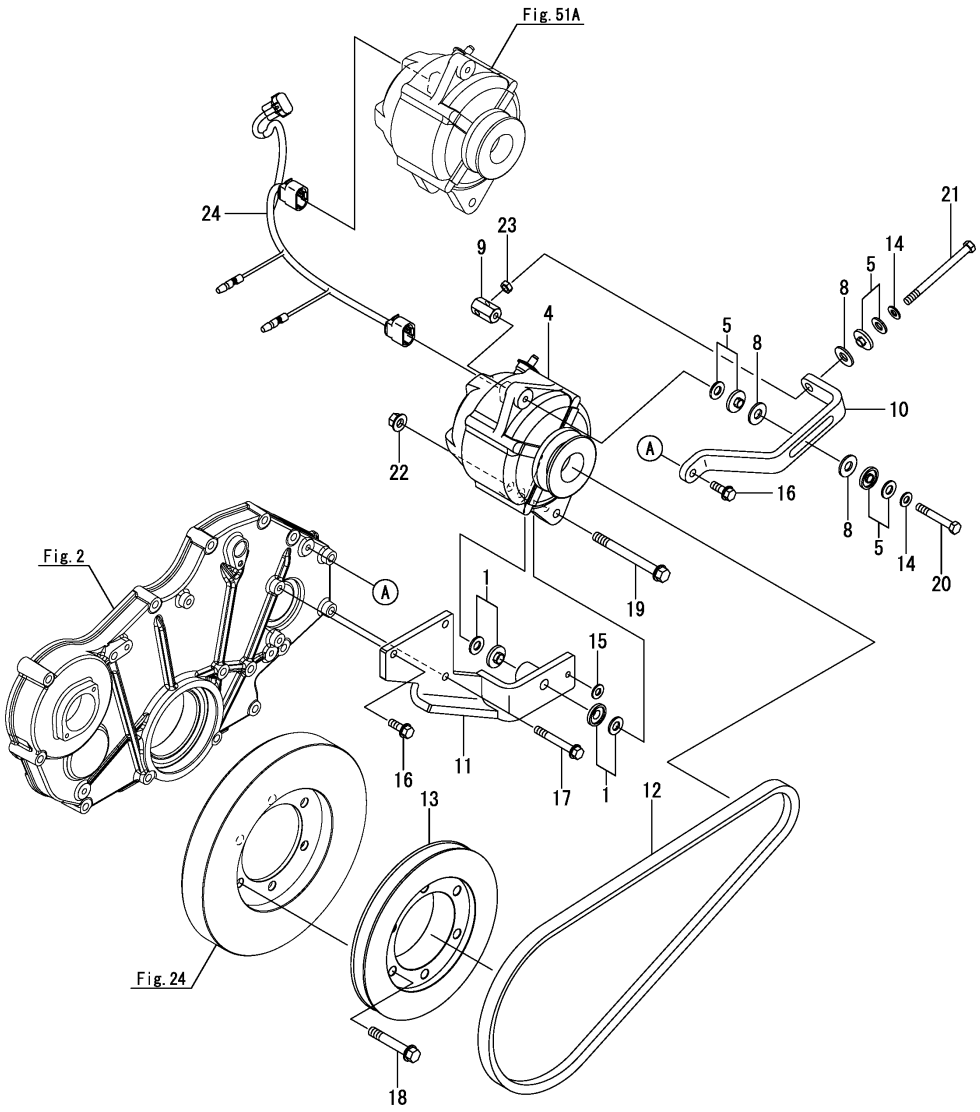

(A)=6LY440 (D)=
(B)=6LY400 (E)=
(C)= (F)=

No.	Lev.	Parts No.	Description	Q'ty (A)	(B)	(C)	(D)	(E)	(F)	I	R
1	1	119581-77200	SPACER, EARTH FLOAT	2	2						
4	1	129978-77200	GENERATOR, 12V-120A	1	1						
5	1	119581-77230	SPACER, EARTH FLOAT	3	3						
8	1	119581-77300	WASHER	3	3						
9	1	119581-77650	NUT, ADJUST 2ND ALT	1	1						
10	1	119581-77760	ADJUSTER, BELT 12V	1	1						
11	1	119581-77770	BRACKET, 2ND ALT 12V	1	1						
12	1	119581-77780	V-BELT, 2ND ALT 12V	1	1						
13	1	119581-77790	V-PULLEY, 2ND ALT 12	1	1						
14	1	22137-080000	WASHER, 8	2	2						
15	1	22137-080000	WASHER, 8	1	1						
16	1	26106-080222	BOLT, M8X 22 PLATED	2	2						
17	1	26106-080602	BOLT, M8X 60 PLATED	2	2						
18	1	26106-100602	BOLT, M10X 60 PLATED	6	6						
19	1	26106-101004	BOLT, M10X100 PLATED	1	1						
20	1	26116-080554	BOLT, M8X 55 PLATED	1	1						
21	1	26116-081004	BOLT, M8X100 PLATED	1	1						
22	1	26306-100002	NUT, M10	1	1						
23	1	26756-080002	NUT, LOCK M8	1	1						
24	1	119581-77150	HARNESS, 2ND ALT 12V	1	1					W	
	(A=E/#2413)		(B=*2017.03.)								

N:Old $\frac{\text{Yes}}{\text{No}}$ New, Q:Old $\frac{\text{No}}{\text{Yes}}$ New, R:Old $\frac{\text{Yes}}{\text{Yes}}$ New, S:Old $\frac{\text{No}}{\text{No}}$ New, W:Add, Z:Discontinued, F:Interchangeable by set, K:Q'ty Change

Copyright (C) 2017 YANMAR CO., LTD. All RightsReserved.

Fig.52. WIRE HARNESS

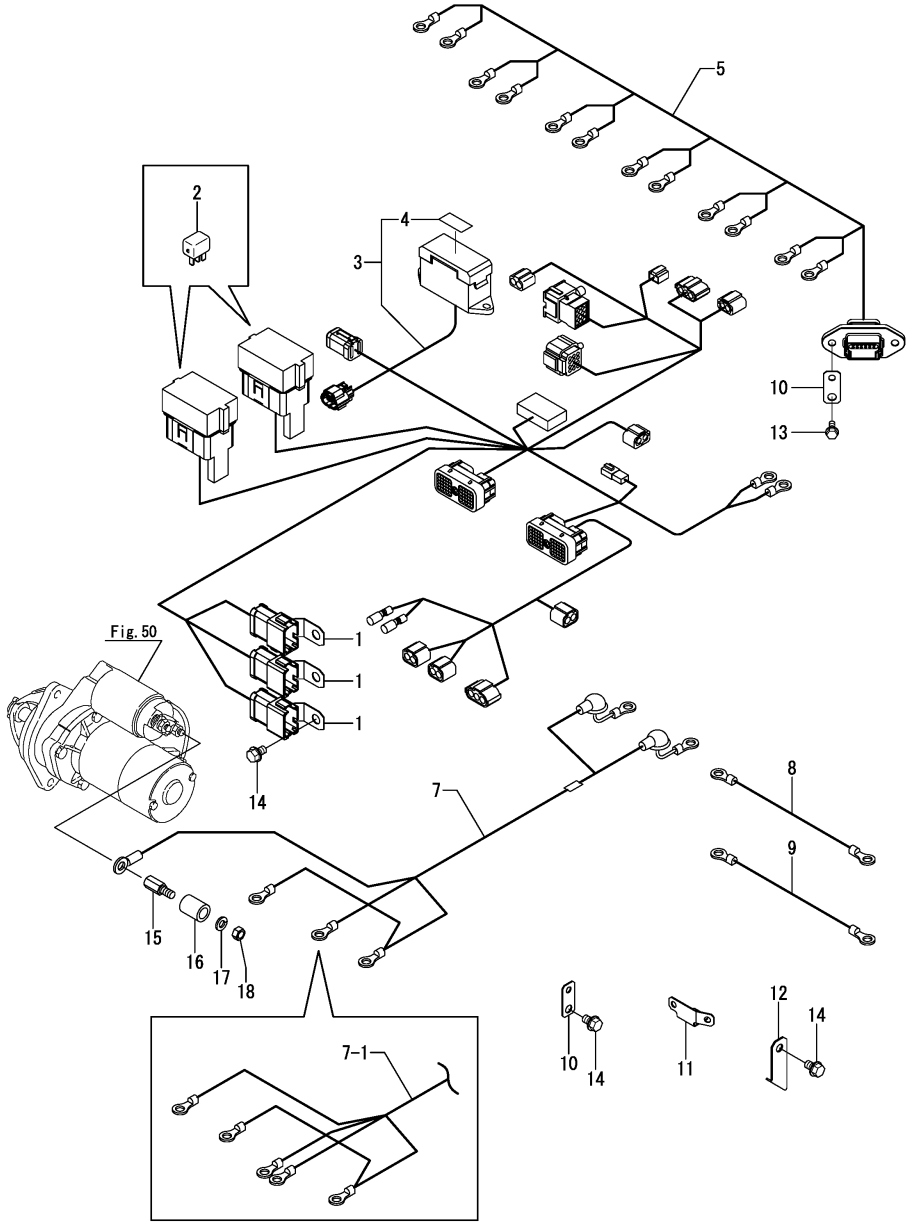

(A)=6LY440 (D)=
(B)=6LY400 (E)=
(C)= (F)=

No.	Lev.	Parts No.	Description	Q'ty (A)	(B)	(C)	(D)	(E)	(F)	I	R
1	1	119578-75610	CLIP, CONNECTOR	3	3						
2	1	127677-77330	RELAY, MAIN	6	6						
3	1	119581-77500	HARNESS, MAIN	1	1						
4	2	119581-07810	LABEL,FUSE LOCATION	1	1						
5	1	119581-77510	HARNESS, INJ	1	1						
6	1	119581-77530	HARNESS, ALT EDU 2PL	1	1						1
6-1	1	119581-77531	HARNESS, ALT EDU 2PL	1	1					S	1
	(A=E/#1716)	(B=E/#1740)									
6-2	1	119581-77532	HARNESS, ALT EDU 2PL	1	1					N	1
	(A=E/#2221)	(B=E/#2218)									
7	1	119581-77540	HARNESS, ST-B	1	1						
7-1	1	119581-77541	HARNESS, ST-B	1	1					N	
	(A=E/#1716)	(B=E/#1740)									
8	1	119581-77550	HARNESS, ST-RL	1	1						
9	1	119581-77560	HARNESS, HEATER-RL	1	1						
10	1	119581-77850	CLIP, HARNESS A	5	5						
10-1	1	119581-77850	CLIP, HARNESS A	4	4					K	
	(A=E/#2221)	(B=E/#2218)									
11	1	119581-77860	CLIP, HARNESS B	1	1						
12	1	119581-77870	CLIP, HARNESS C	1	1						
13	1	26106-060162	BOLT, M6X 16 PLATED	2	2						
14	1	26106-080122	BOLT, M8X 12 PLATED	8	8						
14-1	1	26106-080122	BOLT, M8X 12 PLATED	7	7					K	
	(A=E/#2221)	(B=E/#2218)									
15	1	119175-77500	BOLT	1	1					W	
	(A=E/#2338)	(B=E/#2377)									
16	1	119175-77800	COVER	1	1					W	
	(A=E/#2338)	(B=E/#2377)									
17	1	22212-080000	WASHER 8	1	1					W	
	(A=E/#2338)	(B=E/#2377)									
18	1	26716-080002	NUT, M8	1	1					W	
	(A=E/#2338)	(B=E/#2377)									

Remarks
(1)Refer to Fig.53 for illustration.

N:Old $\xleftarrow[\text{No}]{\text{Yes}}$ New, Q:Old $\xleftarrow[\text{Yes}]{\text{No}}$ New, R:Old $\xleftarrow[\text{Yes}]{\text{Yes}}$ New, S:Old $\xleftarrow[\text{No}]{\text{No}}$ New, W:Add, Z:Discontinued, F:Interchangeable by set, K:Q'ty Change

Copyright (C) 2017 YANMAR CO., LTD. All RightsReserved.

Fig.66. (52A)WIRE HARNESS(SOLAS)(OPTIONAL)

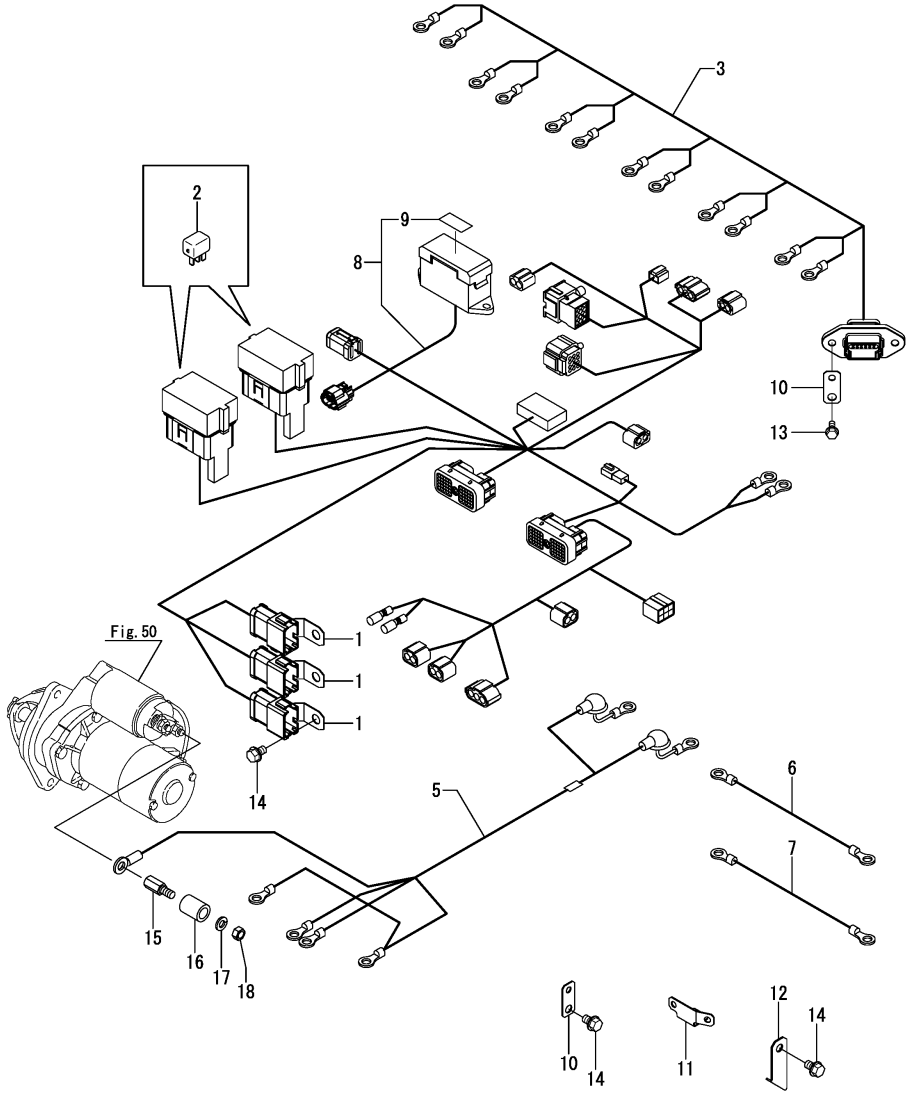

(A)=6LY440 (D)=
(B)=6LY400 (E)=
(C)= (F)=

No.	Lev.	Parts No.	Description	Q'ty (A)	(B)	(C)	(D)	(E)	(F)	I	R
1	1	119578-75610	CLIP, CONNECTOR	3	3						
2	1	127677-77330	RELAY, MAIN	7	7						
3	1	119581-77510	HARNESS, INJ	1	1						
4	1	119581-77532	HARNESS, ALT EDU 2PL	1	1						1
5	1	119581-77541	HARNESS, ST-B	1	1						
6	1	119581-77550	HARNESS, ST-RL	1	1						
7	1	119581-77560	HARNESS, HEATER-RL	1	1						
8	1	119581-77600	HARNESS, MAIN	1	1						
9	2	119581-07810	LABEL,FUSE LOCATION	1	1						
10	1	119581-77850	CLIP, HARNESS A	5	5						
11	1	119581-77860	CLIP, HARNESS B	1	1						
12	1	119581-77870	CLIP, HARNESS C	1	1						
13	1	26106-060162	BOLT, M6X 16 PLATED	2	2						
14	1	26106-080122	BOLT, M8X 12 PLATED	8	8						
15	1	119175-77500	BOLT	1	1					W	
	(A=E/#2338)	(B=E/#2377)									
16	1	119175-77800	COVER	1	1					W	
	(A=E/#2338)	(B=E/#2377)									
17	1	22212-080000	WASHER 8	1	1					W	
	(A=E/#2338)	(B=E/#2377)									
18	1	26716-080002	NUT, M8	1	1					W	
	(A=E/#2338)	(B=E/#2377)									

Remarks
(1)Refer to Fig.53 for illustration.

N:Old $\overset{\text{Yes}}{\underset{\text{No}}{\leftrightarrows}}$ New, Q:Old $\overset{\text{No}}{\underset{\text{Yes}}{\leftrightarrows}}$ New, R:Old $\overset{\text{Yes}}{\underset{\text{Yes}}{\leftrightarrows}}$ New, S:Old $\overset{\text{No}}{\underset{\text{No}}{\leftrightarrows}}$ New, W:Add, Z:Discontinued, F:Interchangeable by set, K:Q'ty Change

Copyright (C) 2017 YANMAR CO., LTD. All RightsReserved.

Fig.53. WIRE HARNESS(EDU)

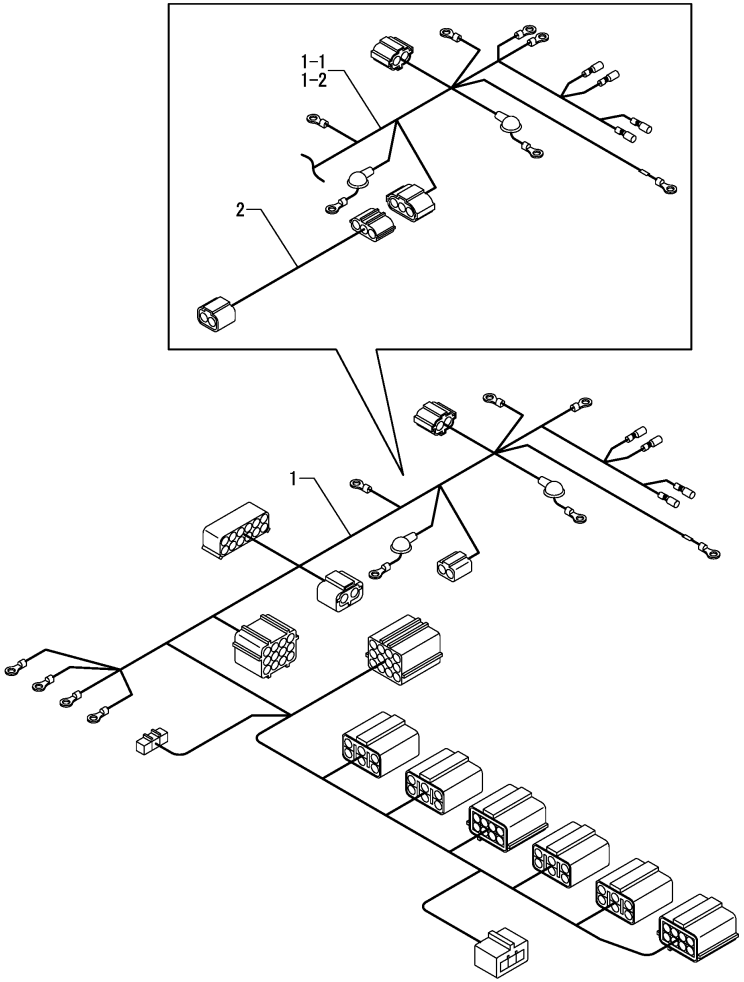

(A)=6LY440 (D)=
(B)=6LY400 (E)=
(C)= (F)=

No.	Lev.	Parts No.	Description	Q'ty (A)	(B)	(C)	(D)	(E)	(F)	I	R
1	1	119581-77530	HARNESS, ALT EDU 2PL	1	1						
1-1	1	119581-77531	HARNESS, ALT EDU 2PL	1	1					S	1
	(A=E/#1716)		(B=E/#1740)								
1-2	1	119581-77532	HARNESS, ALT EDU 2PL	1	1					N	
	(A=E/#2221)		(B=E/#2218)								
2	1	119581-77580	HARNESS,ALT OPTION	1	1					W	2
	(A=E/#1716)		(B=*2016.04.)								

Remarks
(1)Bosch Generator : Interchangeable by simultaneous replacement with No.1-1 & 2.
(2)Exclusive parts for Bosch Generator(Unnecessary for Denso Generator).

N:Old $\xleftrightarrow[\text{No}]{\text{Yes}}$ New, Q:Old $\xleftrightarrow[\text{Yes}]{\text{No}}$ New, R:Old $\xleftrightarrow[\text{Yes}]{\text{Yes}}$ New, S:Old $\xleftrightarrow[\text{No}]{\text{No}}$ New, W:Add, Z:Discontinued, F:Interchangeable by set, K:Q'ty Change

Copyright (C) 2017 YANMAR CO., LTD. All RightsReserved.

Fig.54. SENSOR

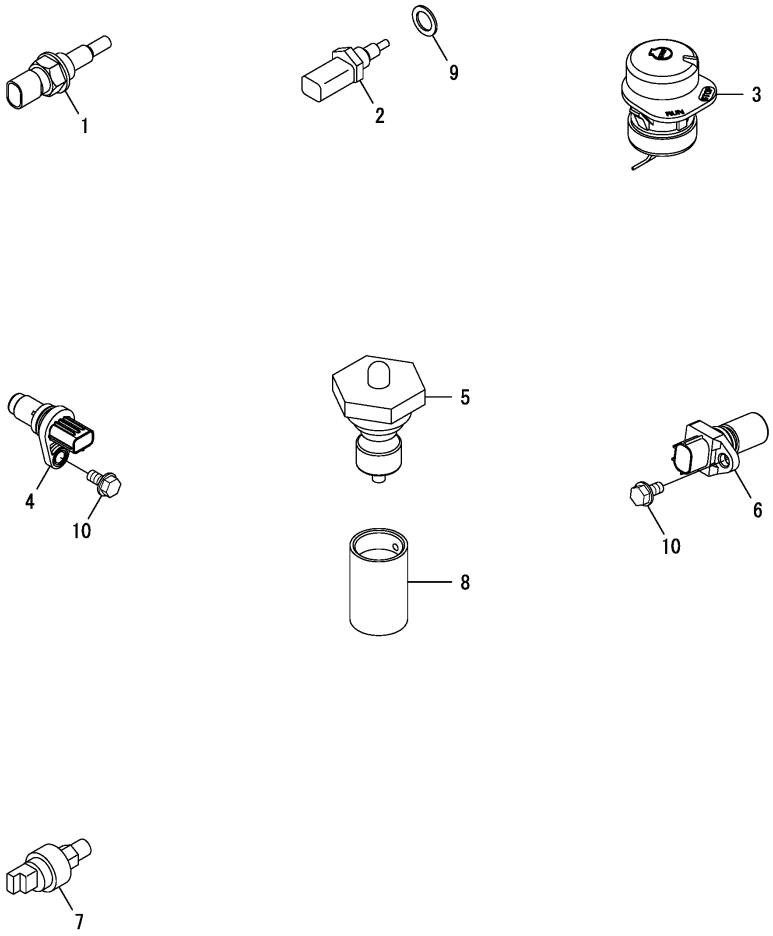

(A)=6LY440
(B)=6LY400
(C)=
(D)=
(E)=
(F)=

No.	Lev.	Parts No.	Description	Q'ty (A)	(B)	(C)	(D)	(E)	(F)	I	R
1	1	124399-12750	SENSOR.INTAKE TEMP	1	1						
2	1	129927-44900	SENSOR, TEMPERATURE	1	1						
3	1	129677-91101	SWITCH,E-STOP	1	1						
4	1	127677-91220	SENSOR, ROTATION	1	1						
5	1	119581-91250	SWITCH, LEVEL	1	1						
6	1	127677-91260	SENSOR, ROTATION	1	1						
7	1	119578-91300	SENSOR, PRESSURE	2	2						
8	1	119581-91860	COVER,FLOAT SWITCH	1	1						
9	1	22190-120002	WASHER, SEAL 12	1	1						
10	1	26106-060122	BOLT, M6X 12 PLATED	2	2						

N:Old $\overset{\text{Yes}}{\underset{\text{No}}{\leftrightarrows}}$ New, Q:Old $\overset{\text{No}}{\underset{\text{Yes}}{\leftrightarrows}}$ New, R:Old $\overset{\text{Yes}}{\underset{\text{Yes}}{\leftrightarrows}}$ New, S:Old $\overset{\text{No}}{\underset{\text{No}}{\leftrightarrows}}$ New, W:Add, Z:Discontinued, F:Interchangeable by set, K:Q'ty Change

Copyright (C) 2017 YANMAR CO., LTD. All RightsReserved.

Fig.67. (54A)SENSOR(SOLAS)(OPTIONAL)

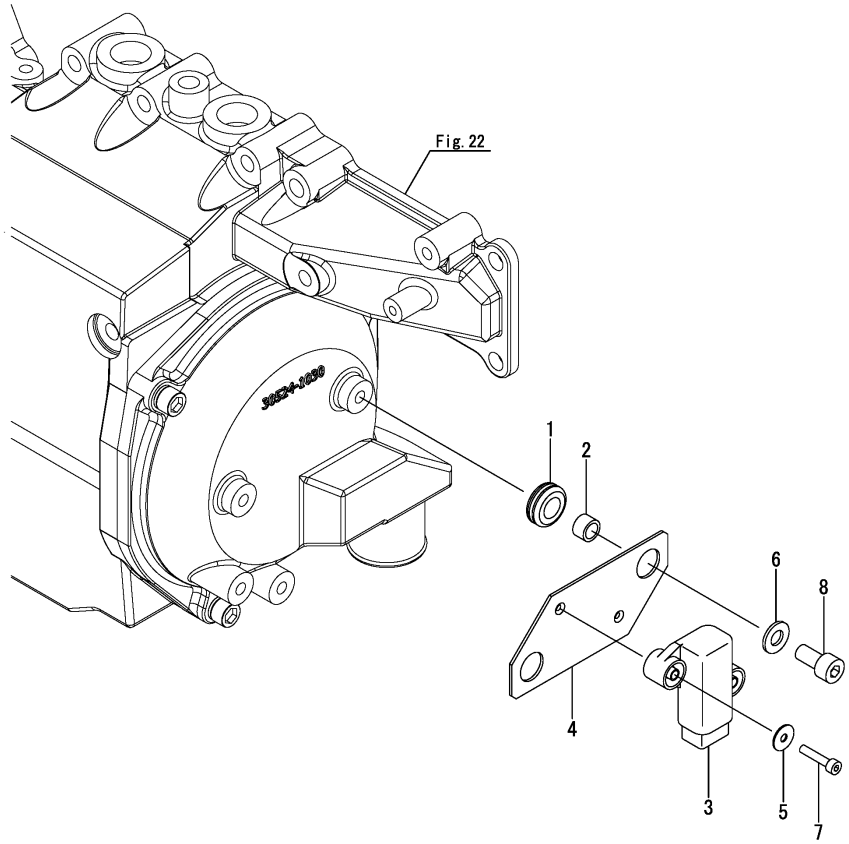

(A)=6LY440
(B)=6LY400
(C)=
(D)=
(E)=
(F)=

No.	Lev.	Parts No.	Description	Q'ty (A)	(B)	(C)	(D)	(E)	(F)	I	R
1	1	105100-55501	RUBBER, CUSHION	2	2						
2	1	105100-55540	COLLAR	2	2						
3	1	119175-91510	SWITCH	1	1						
4	1	119581-91600	BRACKET, SENSOR	1	1						
5	1	119574-99020	WASHER	2	2						
6	1	22137-080000	WASHER, 8	2	2						
7	1	26450-040202	BOLT, M4X 20	2	2						
8	1	26450-080162	BOLT, M8X 16	2	2						

N:Old $\xleftrightarrow[\text{No}]{\text{Yes}}$ New, Q:Old $\xleftrightarrow[\text{Yes}]{\text{No}}$ New, R:Old $\xleftrightarrow[\text{Yes}]{\text{Yes}}$ New, S:Old $\xleftrightarrow[\text{No}]{\text{No}}$ New, W:Add, Z:Discontinued, F:Interchangeable by set, K:Q'ty Change

Copyright (C) 2017 YANMAR CO., LTD. All RightsReserved.

Fig.55. BRACKET(FUSE)

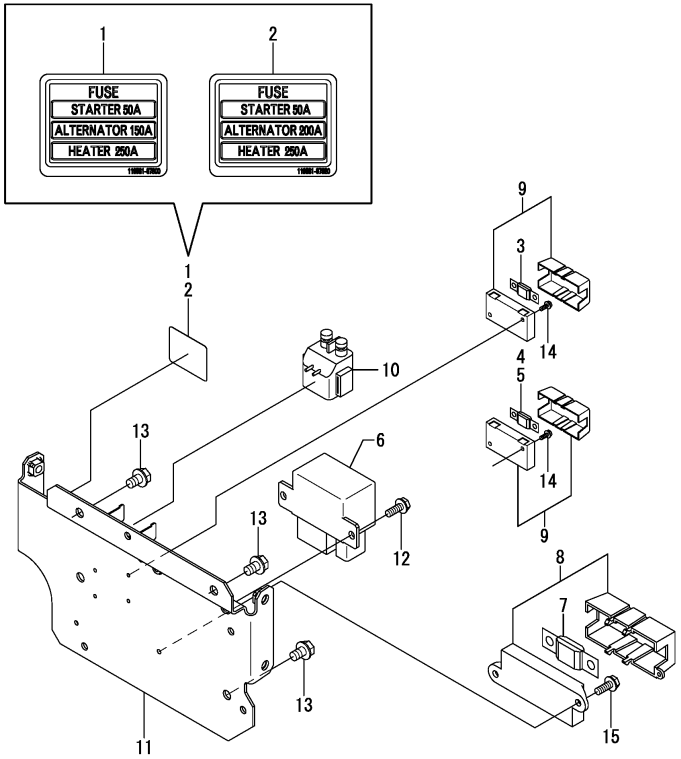

(A)=6LY440
(B)=6LY400
(C)=
(D)=
(E)=
(F)=

No.	Lev.	Parts No.	Description	Q'ty (A)	(B)	(C)	(D)	(E)	(F)	I	R
1	1	119581-07800	LABEL, FUSE	1	1						1
2	1	119581-07820	LABEL, FUSE	1	1					W	2
	(A=E/#1749)	(B=E/#1740)									
3	1	119578-77080	FUSE, 32V-50A	1	1						
4	1	119578-77090	FUSE, 32V-150A	1	1						1
5	1	127677-77060	FUSE, 32V-200A	1	1					W	2
	(A=E/#1749)	(B=E/#1740)									
6	1	119578-77140	RELAY, 12V-130A	1	1						
7	1	119578-77150	FUSE, 32V-250A	1	1						
8	1	119578-77160	HOLDER, FUSE	1	1						
9	1	119578-77200	HOLDER, FUSE	2	2						
10	1	119578-77910	RELAY, STARTER	1	1						
11	1	119581-77970	BRACKET,FUSE 2POLE	1	1						
12	1	26106-060122	BOLT, M6X 12 PLATED	2	2						
13	1	26106-080122	BOLT, M8X 12 PLATED	4	4						
14	1	26557-040082	SCREW, M4X 8	4	4						
15	1	26557-050082	SCREW, M5X 8	2	2						

Remarks
(1)For Bosch Generator.
(2)For Denso Generator.

N:Old $\xleftarrow[\text{No}]{\text{Yes}}$ New, Q:Old $\xleftarrow[\text{Yes}]{\text{No}}$ New, R:Old $\xleftarrow[\text{Yes}]{\text{Yes}}$ New, S:Old $\xleftarrow[\text{No}]{\text{No}}$ New, W:Add, Z:Discontinued, F:Interchangeable by set, K:Q'ty Change

Copyright (C) 2017 YANMAR CO., LTD. All RightsReserved.

Fig.56. TERMINAL

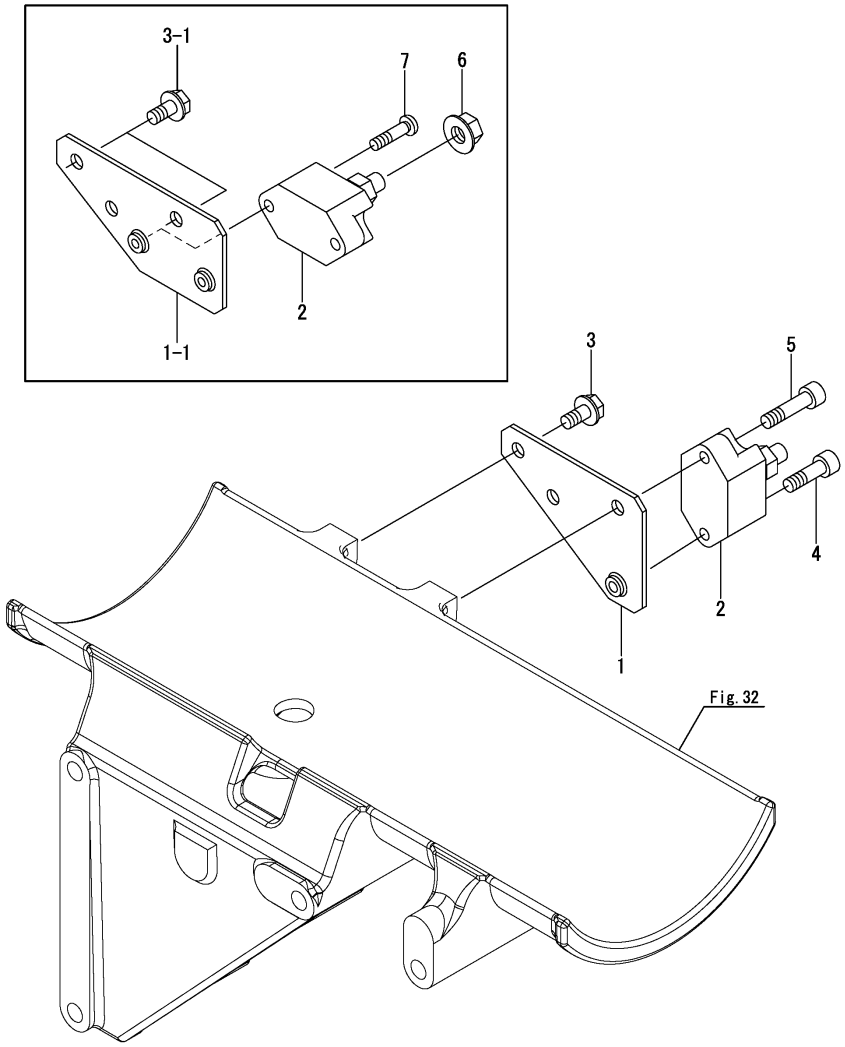

(A)=6LY440 (D)=
(B)=6LY400 (E)=
(C)= (F)=

No.	Lev.	Parts No.	Description	Q'ty (A)	(B)	(C)	(D)	(E)	(F)	I	R
1	1	119581-77940	STAGE,GND TERMINAL	1	1						
1-1	1	119581-77941	STAGE,GND TERMINAL	1	1					N	
	(A=E/#1695)	(B=E/#1705)									
2	1	1E8230-84490	BLOCK, ST8-1B30Z	1	1						
3	1	26106-060122	BOLT, M6X 12 PLATED	1	1						
3-1	1	26106-060122	BOLT, M6X 12 PLATED	2	2					K	
	(A=E/#1695)	(B=E/#1705)									
4	1	26450-060202	BOLT, M6X 20	1	1					Z	
	(A=E/#1695)	(B=E/#1705)									
5	1	26450-060252	BOLT, M6X 25	1	1					Z	
	(A=E/#1695)	(B=E/#1705)									
6	1	26366-080002	NUT, M8	1	1					W	
	(A=E/#1695)	(B=E/#1705)									
7	1	26557-050202	SCREW, M5X20	2	2					W	
	(A=E/#1695)	(B=E/#1705)									

N:Old $\xleftrightarrow[\text{No}]{\text{Yes}}$ New, Q:Old $\xleftrightarrow[\text{Yes}]{\text{No}}$ New, R:Old $\xleftrightarrow[\text{Yes}]{\text{Yes}}$ New, S:Old $\xleftrightarrow[\text{No}]{\text{No}}$ New, W:Add, Z:Discontinued, F:Interchangeable by set, K:Q'ty Change

Copyright (C) 2017 YANMAR CO., LTD. All RightsReserved.

Fig.57. HEATER

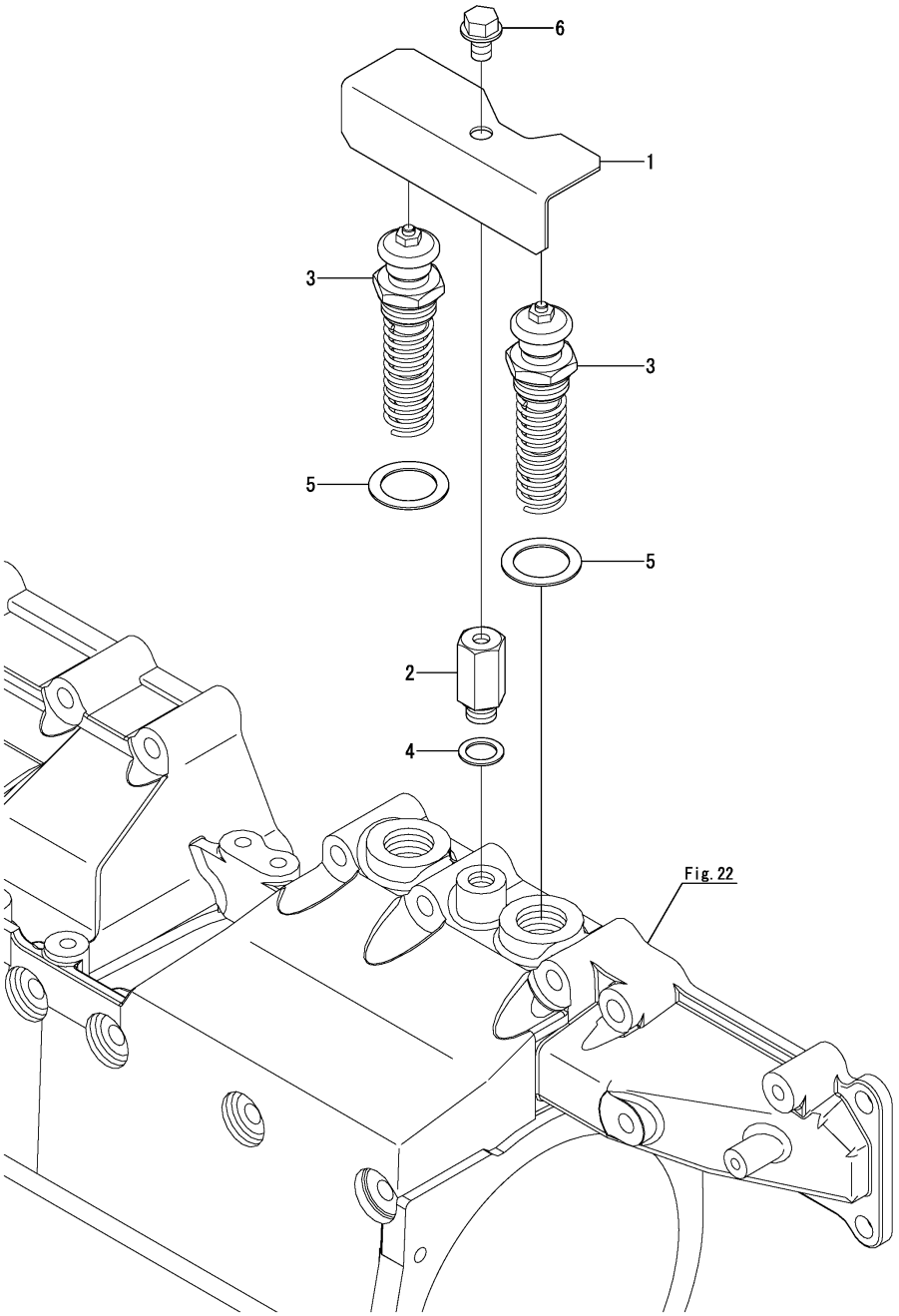

(A)=6LY440
(B)=6LY400
(C)=
(D)=
(E)=
(F)=

No.	Lev.	Parts No.	Description	Q'ty (A)	(B)	(C)	(D)	(E)	(F)	I	R
1	1	119581-77470	COVER,HEATER 2POLE	1	1						
2	1	119581-77480	STAGE,HEATER COVER	1	1						
3	1	119581-77700	HEATER,AIR 2 POLE	2	2						
4	1	23414-120000	GASKET, 12X1.0	1	1						
5	1	23414-220000	GASKET, 22X1.0	2	2						
6	1	26106-080122	BOLT, M8X 12 PLATED	1	1						

N:Old $\xleftrightarrow[\text{No}]{\text{Yes}}$ New, Q:Old $\xleftrightarrow[\text{Yes}]{\text{No}}$ New, R:Old $\xleftrightarrow[\text{Yes}]{\text{Yes}}$ New, S:Old $\xleftrightarrow[\text{No}]{\text{No}}$ New, W:Add, Z:Discontinued, F:Interchangeable by set, K:Q'ty Change

Copyright (C) 2017 YANMAR CO., LTD. All RightsReserved.

Fig.58. CLUTCH

この項目には、イラスト表現はしていません。

The parts of this figure are not illustrated.

(A)=6LY440
(B)=6LY400
(C)=
(D)=
(E)=
(F)=

No.	Lev.	Parts No.	Description	Q'ty (A)	(B)	(C)	(D)	(E)	(F)	I	R
1	1	119581-81100	CLUTCH,KMH61AG-2.43	1	1						
2	1	119581-81110	CLUTCH,KMH61AS-2.04	1	1						
3	1	119581-81120	CLUTCH,KMH61ASS-1.55	1	1						
4	1	119581-81200	CLUTCH,KMH61VGG-2.43	1	1						
5	1	119581-81210	CLUTCH,KMH61VG-1.98	1	1						
6	1	119581-81220	CLUTCH,KMH61VS-1.49	1	1						
7	1	119581-81230	CLUTCH,KMH61VSS-1.24	1	1						

N:Old $\xleftrightarrow[\text{No}]{\text{Yes}}$ New, Q:Old $\xleftrightarrow[\text{Yes}]{\text{No}}$ New, R:Old $\xleftrightarrow[\text{Yes}]{\text{Yes}}$ New, S:Old $\xleftrightarrow[\text{No}]{\text{No}}$ New, W:Add, Z:Discontinued, F:Interchangeable by set, K:Q'ty Change

Copyright (C) 2017 YANMAR CO., LTD. All RightsReserved.

Fig.59. TOOL

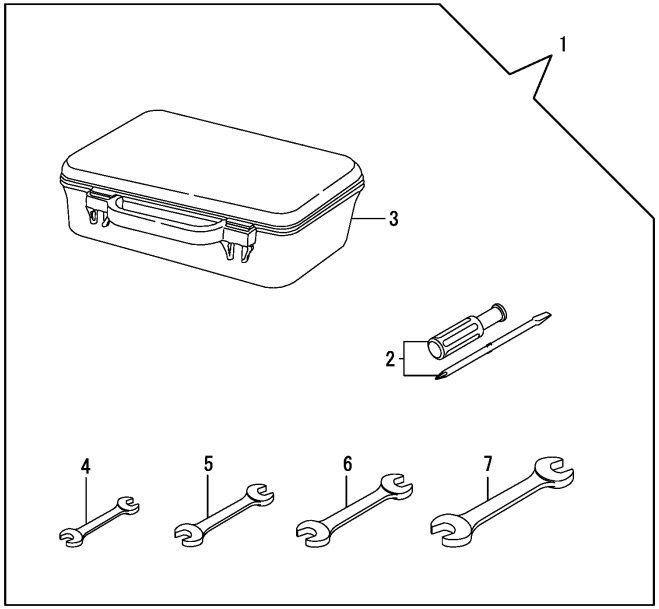

(A)=6LY440
(B)=6LY400
(C)=
(D)=
(E)=
(F)=

No.	Lev.	Parts No.	Description	Q'ty (A)	(B)	(C)	(D)	(E)	(F)	I	R
1	1	719195-92500	TOOL ASSY	1	1						
2	2	104200-92350	SCREW-DRIVER	1	1						
3	2	104200-92600	BOX, TOOL	1	1						
4	2	28110-080100	SPANNER, 8X10	1	1						
5	2	28110-100130	SPANNER, 10X13	1	1						
6	2	28110-120140	SPANNER, 12X14	1	1						
7	2	28110-170190	SPANNER, 17X19	1	1						

N:Old $\xleftrightarrow[\text{No}]{\text{Yes}}$ New, Q:Old $\xleftrightarrow[\text{Yes}]{\text{No}}$ New, R:Old $\xleftrightarrow[\text{Yes}]{\text{Yes}}$ New, S:Old $\xleftrightarrow[\text{No}]{\text{No}}$ New, W:Add, Z:Discontinued, F:Interchangeable by set, K:Q'ty Change

Copyright (C) 2017 YANMAR CO., LTD. All RightsReserved.

Parts No. Index

Parts No.	Fig. No.	Ref. No.
104200-92350	59	2
104200-92600	59	3
104264-59030	18	7
105100-55501	10	5
	11	2
	12	5
	60	5
		11
	67	1
105100-55540	10	6
	11	3
	12	6
	60	6
		12
	67	2
106100-55800	64	2
114385-99151	6	7
119000-01840	1	24
119000-02410	1	15
119000-02450	23	2
119000-34030	26	34
119100-26200	30	25
119171-34820	4	13
119172-48130	6	5
	18	6
	35	8
119172-48190	35	2
		2 -1
	42	1
119172-48280	5	14
	6	6
	28	9 -1
	34	12
	61	14
119172-48350	5	4
		4 -1
	28	9
	61	15
119172-48480	19	4
		5
	20	8
		9
	33	1
		8
	62	10
119172-48540	33	14
	34	1
119175-33350	32	7
119175-77500	52	15
	66	15

Parts No.	Fig. No.	Ref. No.
119175-77800	52	16
	66	16
119175-91050	48	8
119175-91510	67	3
119187-39700	28	20
119195-77200	64	3
119195-77700	64	4
119195-77710	64	5
119195-77720	64	6
119209-42140	61	13
119256-49531	61	16
119285-11990	1	17
119503-22301	25	9
119574-07400	8	15
119574-07450	8	7
119574-08202	7	3
119574-08212	7	4
119574-08231	7	2
119574-13251	19	1
	20	1
	62	1
119574-13300	19	2
	20	2
	62	2
119574-13530	19	3
	20	7
	62	9
119574-18051	21	29
119574-18052	21	29 -1
119574-18700	22	28
119574-18760	22	3
119574-18770	22	4
119574-18790	22	6
119574-18800	22	18
119574-18810	22	7
119574-33011	26	1
119574-33150	26	7
119574-33170	26	4
119574-33180	26	3
119574-33600	26	9
119574-33621	26	10
119574-34861	4	14
119574-39152	27	20
119574-39200	26	28
119574-39651	28	5
119574-39720	28	7
119574-42502	30	2
119574-42510	30	21
119574-42520	30	22
119574-42530	30	23

Parts No.	Fig. No.	Ref. No.
119574-42552	30	17
119574-42560	30	18
119574-42570	30	19
119574-42580	30	20
119574-44150	26	2
	32	2
119574-44170	32	6
119574-44180	26	5
	32	5
119574-44190	32	4
119574-44200	32	3
119574-44600	32	8
119574-44621	32	9
119574-44630	32	10
119574-49050	33	2
119574-49231	34	3
119574-49321	34	14
119574-49751	19	6
	20	12
	62	13
119574-66160	26	6
119574-99020	67	5
119575-01750	3	2
119575-13300	20	3
	62	3
119575-13320	20	5
	62	5
119575-13330	20	6
	62	7
119575-13350	62	8
119575-44010	32	1
119578-01200	1	34
119578-01210	1	35
119578-03190	6	2
119578-03370	61	7
119578-03380	61	8
119578-03400	61	9
119578-11080	13	5
119578-11090	13	6
119578-11110	13	21
119578-11130	13	23
119578-11180	13	24
119578-11461	13	22
119578-11520	13	11
119578-11550	13	47
119578-13200	17	1
119578-13300	62	6
119578-14210	23	7
119578-14240	23	8
119578-14400	23	9

Parts No.	Fig. No.	Ref. No.
119578-18010	21	1
119578-18810	21	38
119578-18860	21	35
119578-18880	21	37
119578-22300	25	3
119578-28000	24	15
119578-39170	27	36
	34	22
119578-39180	27	21
119578-42130	31	4
119578-42600	30	13
119578-42610	30	5
119578-42620	30	6
119578-42630	30	7
119578-42640	30	11
119578-42650	30	14
119578-42660	30	12
119578-42670	30	16
119578-42680	30	15
119578-42690	30	8
119578-42700	30	9
119578-42720	30	10
119578-49240	62	12
119578-75610	52	1
	66	1
119578-77080	55	3
119578-77090	55	4
119578-77140	55	6
119578-77150	55	7
119578-77160	55	8
119578-77200	55	9
119578-77910	55	10
119578-91300	54	7
119581-01020	1	4
119581-01210	2	1
119581-01211	2	1 -1
119581-01212	2	1 -2
119581-01220	2	3
119581-01221	2	3 -1
119581-01223	2	3 -2
119581-01350	1	33
119581-01600	3	1
119581-01601	3	1 -1
119581-03100	5	3
119581-03110	5	8
119581-03111	5	8 -1
119581-03120	5	9
119581-03130	5	10
119581-03140	5	11
	61	2

Parts No. Index

Parts No.	Fig. No.	Ref. No.
119581-03150	5	12
	61	3
119581-03160	14	1
119581-03170	6	1
119581-03180	5	13
	61	4
119581-03230	6	3
119581-03310	61	5
119581-03320	61	6
119581-03430	61	10
119581-03460	61	11
119581-03470	61	12
119581-07200	13	56
119581-07250	13	57
119581-07510	9	2
119581-07800	55	1
119581-07810	52	4
	66	9
119581-07820	55	2
119581-09300	9	1
119581-09400	9	3
119581-09421	9	4
119581-09440	9	6
119581-09450	9	7
119581-09460	9	8
119581-09470	9	9
119581-09502	10	1
119581-09510	10	2
	60	2
119581-09530	60	1
119581-09560	11	1
119581-09601	12	1
119581-09610	12	2
119581-09800	9	12
119581-09810	9	13
119581-09820	10	3
	60	3
119581-09830	12	3
119581-09840	12	4
119581-09850	10	4
119581-09860	60	4
119581-09870	60	10
119581-09871	60	10 -1
119581-11150	13	20
119581-11200	13	28
119581-11301	14	13
119581-11380	14	14
119581-11400	14	2
119581-11401	14	2 -1
119581-11402	14	2 -2

Parts No.	Fig. No.	Ref. No.
119581-11420	14	7
119581-11431	14	10
119581-11500	13	43
119581-11520	13	48
119581-11790	38	2
119581-11800	38	2 -1
119581-11840	13	17
119581-11870	13	18
119581-11920	39	1
119581-12110	16	1
119581-12130	16	2
119581-13200	17	2
119581-13230	17	5
119581-14100	23	1
119581-14110	23	5
119581-18100	21	46
		46 -1
119581-18110	22	1
119581-18120	22	5
119581-18230	21	33
119581-18240	21	34
119581-18241	21	34 -1
119581-18300	22	26
119581-18310	22	27
119581-18311	22	27 -1
119581-18600	22	16
119581-18750	22	2
119581-21600	24	18
119581-21680	24	13
119581-25100	23	12
119581-25120	23	14
119581-25130	23	15
119581-25200	23	16
119581-25220	23	18
119581-25230	23	19
119581-34810	4	12
119581-35110	26	29
119581-39080	1	36
119581-39090	1	37
119581-39100	27	32
119581-39300	27	22
119581-39311	27	23
119581-39320	27	37
119581-39350	27	24
119581-39370	27	35
119581-39410	28	2
119581-39420	28	3
119581-39500	28	19
119581-39770	26	11
119581-42010	31	1

Parts No.	Fig. No.	Ref. No.
119581-42020	31	15
119581-42110	31	6
119581-42120	31	10
119581-42370	31	27
119581-42420	31	16 A
119581-44800	18	5
119581-49080	33	5
119581-49100	35	3
119581-49110	35	4
119581-49120	35	5
119581-49150	34	2
119581-49151	34	2 -1
119581-49230	20	11
119581-49270	34	5
119581-49271	34	5 -1
119581-49410	34	23
119581-49420	34	16
119581-49430	34	17
119581-49431	34	17 -1
119581-49440	34	18
119581-49441	34	18 -1
119581-49450	34	19
119581-49460	34	21
119581-49700	33	9
119581-49710	33	10
119581-49960	62	14
119581-51010	37	1
119581-51020	37	2
119581-51100	37	12
119581-53350	38	5
119581-54100	40	1
119581-54150	40	2
119581-55150	41	1
119581-55160	41	2
119581-55170	41	3
119581-55190	41	4
119581-55500	44	1
119581-55730	44	2
119581-57500	43	1
119581-59010	39	6
119581-59020	39	11
119581-59030	39	16
119581-59040	39	21
119581-59050	39	26
119581-59060	39	31
119581-59070	39	2
119581-59200	45	2
119581-59210	45	3
119581-59220	45	4
119581-59241	45	5

Parts No.	Fig. No.	Ref. No.
119581-59260	45	6
119581-59270	46	1
119581-59300	44	3
119581-59500	45	7
119581-59521	44	4
119581-59810	39	36
119581-59830	39	38
119581-75010	47	1
119581-75020	47	2
119581-75200	49	1
119581-75810	47	21
119581-75820	47	22
119581-75830	47	23
119581-75840	47	24
119581-75900	47	14
119581-77010	15	1
119581-77100	64	23
119581-77130	63	17
119581-77150	65	24
119581-77200	51	1
	63	1
	65	1
119581-77230	51	12
	63	5
	65	5
119581-77290	51	24
119581-77300	51	15
	63	8
	65	8
119581-77310	63	9
119581-77330	51	16
119581-77350	51	17
119581-77351	51	17 -1
119581-77400	63	10
119581-77401	63	10 -1
119581-77470	57	1
119581-77480	57	2
119581-77500	52	3
119581-77510	52	5
	66	3
119581-77530	52	6
	53	1
119581-77531	52	6 -1
	53	1 -1
119581-77532	52	6 -2
	53	1 -2
	66	4
119581-77540	52	7
119581-77541	52	7 -1
	66	5

Parts No. Index

Parts No.	Fig. No.	Ref. No.
119581-77550	52	8
	66	6
119581-77560	52	9
	66	7
119581-77580	53	2
119581-77600	66	8
119581-77650	64	11
	65	9
119581-77660	64	12
119581-77670	64	13
119581-77671	64	13 -1
119581-77690	64	14
119581-77700	57	3
119581-77730	63	18
119581-77760	65	10
119581-77770	65	11
119581-77780	65	12
119581-77790	65	13
119581-77850	52	10
		10 -1
	66	10
119581-77860	52	11
	66	11
119581-77870	52	12
	66	12
119581-77880	48	1
119581-77890	48	2
119581-77901	48	3
119581-77910	48	5
119581-77920	48	7
119581-77940	56	1
119581-77941	56	1 -1
119581-77950	12	7
119581-77970	55	11
119581-81100	58	1
119581-81110	58	2
119581-81120	58	3
119581-81200	58	4
119581-81210	58	5
119581-81220	58	6
119581-81230	58	7
119581-91250	54	5
119581-91600	67	4
119581-91860	54	8
119593-01732	4	5
119593-01751	1	38
119593-01760	1	43
119593-02070	1	8
119593-02120	1	51
119593-02170	1	57

Parts No.	Fig. No.	Ref. No.
119593-02420	1	16
119593-02500	1	48
119593-02600	1	54
119593-03040	5	1
119593-07220	13	54
119593-08400	7	7
119593-18071	21	31
119593-18080	21	30
119593-18110	21	32
119593-18800	22	29
119593-18880	21	36
119593-21500	24	17
119593-23200	25	16
119593-23400	25	19
119593-32001	27	3
119593-32500	27	4
119593-32530	27	7
119593-32700	27	8
		8 -1
119593-32710	27	9
		9 -1
119593-32720	27	8 A
119593-32730	27	9 A
119593-32740	27	8 B
119593-32750	27	9 B
119593-34001	26	32
119593-34020	26	42
119593-34870	4	15
119593-35100	26	20
119593-35150	26	24
119593-35161	26	25
119593-35191	27	11
119593-35400	26	26
119593-39151	27	15
119593-39450	6	4
	28	18
119593-39560	1	44
119593-39630	28	4
119593-39690	28	6
119593-42120	31	5
119593-42121	31	5 -1
119593-42280	31	26
119593-42300	31	16
119593-44560	32	19
119593-49250	34	4
119593-49291	31	21
119593-49320	34	15
119593-49530	31	22
119595-01800	2	4
119595-07360	8	16

Parts No.	Fig. No.	Ref. No.
119595-18121	22	10
119595-18170	22	25
119595-18600	22	11
119595-21200	24	5
119595-21300	24	9
119595-21651	24	12
119595-23310	25	21
119595-33050	26	8
119595-35150	26	22
119595-39580	1	47
119595-44050	32	11
119595-44600	18	1
119595-44700	18	4
119595-49060	33	3
119595-49070	33	4
119620-49290	22	40
	26	16
	32	23
	34	6
119773-07280	8	5
119773-08300	7	10
119773-08330	7	11
119773-08340	7	12
119773-08350	7	13
119773-13160	17	3
119778-26660	27	19
	35	1
119779-49210	20	10
	62	11
119799-59601	44	5
119802-13641	23	11
119885-01990	1	7
120130-11860	13	7
120130-39990	29	2
120320-11520	13	45
		50
120324-07240	8	1
120324-55751	42	2
120324-55760	42	3
120445-44640	17	9
	18	3
121254-77402	50	2
121254-77410	50	3
121254-77420	50	4
121254-77430	50	5
121254-77480	50	10
121254-77511	50	13
121254-77521	50	14
121254-77541	50	15
121254-77571	50	17

Parts No.	Fig. No.	Ref. No.
121254-77581	50	18
121254-77590	50	19
121254-77600	50	20
121254-77610	50	21
121254-77671	50	26
121254-77700	50	29
121254-77730	50	32
121254-77770	50	36
121254-77780	50	37
121254-77790	50	38
121254-77810	50	39
121400-11340	13	25
121850-01920	2	5
121850-21920	24	6
121850-35200	26	35
121950-28420	27	2
123325-59420	42	16
123672-21500	24	11
123672-21861	24	14
123672-55811	42	15
123672-84530	26	40
123682-07852	8	14
123688-39820	28	8
123900-13630	38	4
124160-01751	14	3
124160-39140	27	33
	28	1
		17
124195-49100	34	13
124399-12750	54	1
124411-01780	3	3
124411-03051	5	2
	61	1
124411-28400	27	1
124411-35520	26	39
124413-39100	29	1
124450-39240	45	1
124460-11340	13	26
124460-77680	22	38
	32	12
124610-77019	50	1
124610-77550	50	16
124610-77640	50	23
124610-77660	50	25
124610-77690	50	28
124699-11230	13	31
		35
124699-49100	5	5
124766-59050	22	13
124790-44560	32	22

Parts No. Index

Parts No.	Fig. No.	Ref. No.
124790-55770	17	10
	22	35
126630-77810	45	8
127410-21480	24	21
127495-08320	7	6
127605-48590	31	23
127610-49010	33	15
127616-11920	38	3
127677-11700	38	1
127677-77060	55	5
127677-77330	52	2
	66	2
127677-91220	54	4
127677-91260	54	6
127687-18910	22	30
128171-07150	8	13
128296-07190	8	8
128296-07260	8	2
128296-07300	8	3
128296-07350	8	4
128296-07400	8	9
128296-07420	8	10
128296-07450	8	11
128296-07460	8	12
128371-01800	3	4
129100-01580	1	21
		22
		23
	7	1
129150-11750	13	32
		36
129150-11810	13	9
129171-44600	17	8
	18	2
129677-91101	54	3
129908-77200	51	4
129908-77710	51	5
129908-77720	51	6
129908-77730	51	7
129908-77740	51	8
129908-77750	51	9
129908-77760	51	10
129908-77770	51	11
129908-77780	64	7
129908-77790	64	8
129908-77800	64	9
129908-77830	64	10
129927-44900	54	2
129927-77910	64	24
129927-77920	64	25

Parts No.	Fig. No.	Ref. No.
129963-42290	64	1
129978-51200	37	3
129978-51220	37	5
129978-51300	37	6
129978-51310	37	7
129978-51320	37	8
129978-51400	37	9
129978-51410	37	10
129978-51420	37	11
129978-77200	63	4
	65	4
129C00-91200	5	15
	61	17
129F01-13690	21	48
144626-54572	13	55
171301-01640	4	2
177524-02211	24	23
177524-02221	24	24
177524-02230	24	25
177524-03701	24	26
196630-12980	8	6
1E8230-84490	56	2
22113-100001	21	47
		47 -1
22137-080000	4	6
	9	14
	10	7
	12	8
	22	14
		31
	23	20
	26	12
	32	13
	42	17
	45	9
	60	7
	63	11
	65	14
		15
	67	6
22137-100000	17	6
22137-120000	41	5
	50	42
22157-080000	9	15
		15 -1
	10	8
	12	9
	60	8
		13
22190-080002	6	8

Parts No.	Fig. No.	Ref. No.
22190-080006	45	10
	46	2
22190-100006	45	11
22190-120002	54	9
22190-120006	14	15
22190-140006	44	11
	45	12
22190-160002	44	12
22190-160006	44	13
22190-270002	22	17
22212-080000	52	17
	66	17
22217-060000	48	9
22217-080000	42	18
22217-120000	50	44
22217-270000	7	8
22252-000370	25	10
22252-000880	40	3
22312-080450	40	4
22312-100220	3	5
22351-040010	1	31
22351-080016	1	32
22512-070140	23	6
22512-070220	24	8
22857-400060	9	10
23010-013000	32	21
23061-070400	22	39
	32	14
23061-100750	22	15
23080-012000	14	11
23123-100606	61	18
23171-100000	61	19
23297-060081	45	13
23297-080081	18	8
23414-080000	26	45
23414-080012	17	11
	18	9
	22	34
23414-100000	27	34
	28	10
		26
23414-120000	1	60
	57	4
23414-130000	19	7
	20	13
	62	15
23414-130017	35	6
23414-140000	42	19
23414-140018	26	15
23414-150000	44	14

Parts No.	Fig. No.	Ref. No.
23414-170000	21	40
23414-180000	26	41
23414-220000	57	5
23414-360000	17	7
23831-060000	14	16
23851-030000	45	14
	46	3
23851-080000	45	15
23851-100000	44	15
23857-030000	18	10
23857-080000	42	20
23875-030000	31	3
23876-010000	13	12
23876-020000	13	13
23881-160002	44	16
23887-180002	3	9
23893-020002	19	8
	20	14
	62	16
23894-030002	21	41
24101-060064	30	24
24101-060100	24	10
24101-060110	40	5
24147-010110	40	6
24190-320001	61	20
		21
24311-000140	3	6
24311-000200	27	16
		25
24311-000280	27	12
24311-000320	14	8
24314-000200	27	26
	28	11
24321-000350	33	6
24321-000450	31	7
24324-000250	28	12
24324-000700	34	10
24326-000250	13	19
	38	6
24326-000500	2	6
24341-000100	4	16
24341-000240	4	4
24341-000800	30	28
26013-080182	27	17
26013-080252	27	14
26076-080702	23	21
26106-050102	14	9
26106-060082	15	2
	48	10
26106-060102	39	39

Parts No. Index

Parts No.	Fig. No.	Ref. No.
26106-060122	39	37
	54	10
	55	12
	56	3
		3 -1
26106-060142	39	40
26106-060162	44	17
	45	16
	52	13
	61	22
	66	13
26106-060202	5	6
	61	23
26106-060302	50	40
26106-060352	5	7
26106-060452	50	41
26106-060552	61	24
26106-080102	20	15
	45	17
	62	17
26106-080122	6	9
	26	46
	27	27
	35	7
	45	18
	48	11
	52	14
		14 -1
	55	13
	57	6
	62	18
	66	14
26106-080142	17	12
	20	16
	62	19
26106-080162	2	7
	4	17
	11	4
	12	10
	23	10
	27	13
		28
	28	13
	34	20
	63	19
26106-080182	1	39
	13	58
	31	17
26106-080202	2	8
	22	19

Parts No.	Fig. No.	Ref. No.
26106-080202	22	20
		21
	27	29
		30
	28	14
	30	26
	32	15
	33	7
	41	6
	51	18
	62	20
	63	12
26106-080222	51	19
	64	15
	65	16
26106-080252	4	7
	26	31
	27	18
	28	15
	31	24
	34	11
26106-080302	1	40
	22	22
	24	30
	31	18
26106-080352	4	8
26106-080402	2	9
		9 -1
	13	52
	16	3
	26	43
	42	21
26106-080404	64	16
26106-080452	1	41
	2	10
	14	12
	26	44
	31	25
26106-080454	51	20
26106-080502	1	42
	2	11
		11 -1
	26	13
	27	31
	43	2
26106-080552	22	23
26106-080602	16	4
	18	11
	64	17
	65	17

Parts No.	Fig. No.	Ref. No.
26106-080702	13	53
	16	5
26106-080752	2	12
	4	18
26106-080802	31	19
26106-080852	2	13
26106-080902	4	9
	22	36
26106-080952	31	20
26106-081152	22	37
26106-081202	4	10
	26	30
26106-081252	22	12
26106-100182	21	42
26106-100202	21	43
	28	16
	42	22
26106-100222	24	16
26106-100302	3	7
	21	44
26106-100352	3	8
	24	31
26106-100552	27	10
26106-100602	64	18
	65	18
26106-100702	63	13
26106-101004	65	19
26106-101052	51	21
26106-101252	64	19
26106-120352	41	7
26113-080552	22	32
26113-081502	22	33
26116-080554	63	14
	65	20
26116-081004	64	20
	65	21
26116-081302	26	14
26116-081502	22	24
	32	16
26116-081902	4	11
26116-120302	7	5
26116-120352	50	43
26213-100252	21	45
26306-080002	30	27
	42	23
	51	22
	63	15
26306-100002	51	23
	64	21
	65	22

Parts No.	Fig. No.	Ref. No.
26366-060002	39	41
	48	12
	63	16
26366-080002	10	9
	12	11
	27	39
	47	13
	56	6
	60	9
		14
	62	21
26450-040082	49	2
26450-040202	67	7
26450-060202	56	4
26450-060252	56	5
26450-080162	67	8
26450-080252	37	13
26450-080402	14	17
26455-080202	1	18
26557-040082	55	14
26557-050082	55	15
26557-050202	56	7
26577-060222	31	9
26577-080162	31	8
26587-040082	9	11
26658-080002	9	16
26703-100002	21	39
		39 -1
26706-100002	42	24
26716-080002	52	18
	66	18
26716-120002	41	8
26756-080002	13	46
		51
	64	22
	65	23
26776-270002	7	9
27231-650000	1	19
27241-160000	1	20
	13	14
27241-250000	13	15
27241-400000	13	16
27241-450000	13	20 -1
27310-080001	13	27
28110-080100	59	4
28110-100130	59	5
28110-120140	59	6
28110-170190	59	7
29622-140001	27	38
	34	24

Parts No. Index

Parts No.	Fig. No.	Ref. No.
43530-500610	33	12
43662-030031	33	13
43730-552171	33	11
719195-92500	59	1
719573-01540	4	1
719574-42700	30	1
719581-01100	1	1
719581-01101	1	1 -1
719581-11100	13	1
719581-11101	13	1 -1
719581-22100	25	1
719593-02590	1	25
719593-02800	1	28
719595-21700	24	1
719595-23600	25	17
719595-23701	25	11
720445-44201	32	17
777524-02121	24	22
977780-01211	36	1
977780-03000	36	9
X0044021509	36	7
X0135771	30	4
X0225002201	32	20
X0300120414	42	9
X0311121522	42	7
X0313080922	42	13
X0314080110	42	11
X0318101004	36	2
X0580121073	42	8
X0582810173	42	6
X0588080273	42	12
X0588530373	26	21
		27
X0600160122	42	10
X0993071171	42	14
X158606410X	36	3
X179100022X	36	5
X179100100X	36	6
X199906101X	36	8
X211851012	22	9
X213046003	50	27
X214320104	22	8
X2740134002	42	4
X8636015001	36	4
XJD532012	21	26
XNB133206	21	24
XNH171881	21	4
XNH172003	21	2
XNH172504	21	10
XNH173440	21	21

Parts No.	Fig. No.	Ref. No.
XNH174404	21	14
XNH174858	21	13
XNH175702	21	9
XNH178265	21	17
XNH191305	21	6
XNH193006	21	23
XNH261605	21	5
XNH271351	21	3
XNH273502	21	12
XNH362809	21	20
XNH747101	21	15
XNH964291	21	25
XNH964293	21	27
XNN137007	21	19
XNN137423	21	18
XNN171107	21	7
XNN171110	21	8
XNN173204	21	22
XNN173504	21	11
XNN976662	21	28

Parts No.	Fig. No.	Ref. No.

Parts No.	Fig. No.	Ref. No.