YANMAR

PARTS CATALOG

0CR10-M68301EN

Last update Apr., 2016

Introduction

1.This parts catalog for 4JH4AE is published as a revised edition of the Diesel engine.

	Date of issue	Remarks
First edition	Feb., 2007	No need
1st edition(supplement)	May, 2014	

2.Standard finish color. Yanmar ecole silver metallic
Parts No. 977620-40071 4L(Packed in a can)
Parts No. TOR-94800250 Spray(1 piece)

3.This parts catalog does not contain the technical data needed for maintenance service.

4.The illustrations used in this parts catalog have been simplified for clarity.

5.The contents of this parts catalog are subject to change without notice.

6.Be sure to use only Yanmar genuine parts for repairs.If imitation parts are used, it may cause engine defects.

Contents

0CR10-M68301

Fig. No.	Fig. Name
4JH4AE	
1.	CYLINDER BLOCK
2.	GEAR HOUSING
3.	FLYWHEEL HOUSING
4.	MOUNTING FOOT
5.	LUB. OIL SUMP
6.	LABEL
7.	CYLINDER HEAD
8.	BONNET
9.	SUCTION MANIFOLD
10.	MIXING ELBOW
11.	CAMSHAFT & DRIVING GEAR
12.	CRANKSHAFT & FLYWHEEL
13.	PISTON & CONNECTING ROD
14.	LUB. OIL SYSTEM
15.	LUB. OIL PIPE
16.	COOLING SEA WATER PUMP
17.	COOLING FRESH WATER PUMP
18.	COOLING FRESH WATER COOLER
19.	COOLING SEA WATER PIPE
20.	COOLING FRESH WATER PIPE
21.	COOLING SEA WATER STRAINER(OPTIONAL)
22.	BILGE PUMP(STD)(OPTIONAL)
23.	BILGE PUMP(DX)(OPTIONAL)
46.	(23A)BILGE PUMP(OPTIONAL)

Fig. No.	Fig. Name
24.	FUEL INJECTION PUMP
25.	GOVERNOR
26.	FUEL FEED PUMP
27.	FUEL INJECTION VALVE
28.	FUEL INJECTION PIPE
29.	FUEL PIPE & FUEL STRAINER
30.	OIL/WATER SEPARATER
31.	FUEL TANK(OPTIONAL)
32.	CABLE SUPPORT
33.	CLUTCH
34.	COUPLING(OPTIONAL)
35.	STARTING MOTOR
36.	GENERATOR
37.	V-BELT COVER
38.	V-BELT COVER & GENERATOR ATTACHIMENT(OPTIONAL)
39.	WIRE HARNESS & SENSOR
40.	INSTRUMENT PANEL(B-TYPE)(OPTIONAL)
41.	INSTRUMENT PANEL(C-TYPE)(OPTIONAL)
44.	(41A)INSTRUMENT PANEL(B-TYPE : KEYLES)(OPTIONAL)
45.	(41B)INSTRUMENT PANEL(C-TYPE : KEYLES)(OPTIONAL)
42.	TOOLS
43.	GASKET SET(OPTIONAL)

Fig.1. CYLINDER BLOCK

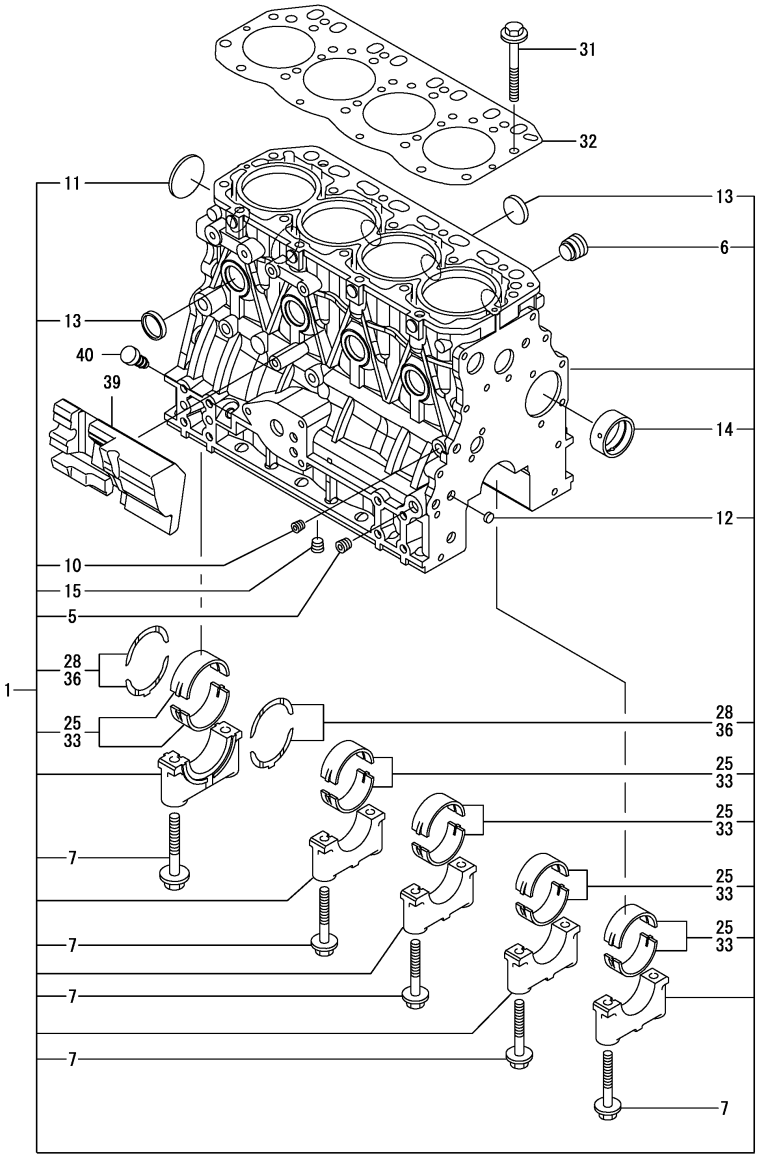

(A)=4JH4AE (D)=
(B)= (E)=
(C)= (F)=

No.	Lev.	Parts No.	Description	Q'ty (A)	(B)	(C)	(D)	(E)	(F)	I	R
1	1	729602-01560	BLOCK ASSY, CYLINDER	1							
5	3	124160-01910	PLUG, PT1/4	2							
6	3	171051-01921	PLUG, NPTF1	1							
7	3	129150-02020	BOLT, METAL CAP	10							
10	3	124060-01050	PLUG, PT1/8	1							
11	3	129001-01250	PLUG, 50	1							
12	3	27241-120000	PLUG, 12	2							
13	3	27241-300000	PLUG 30	8							
14	3	129795-02412	BUSH, CAMSHAFT	1							
15	3	124160-01910	PLUG, PT1/4	1							
25	2	129001-02931	BEARING, MAIN	5							3
28	2	129150-02931	BEARING, THRUST	2							3
31	1	129150-01200	BOLT, HEAD	18							
32	1	129407-01340	GASKET, HEAD	1							
33	1	129150-02871	BEARING, 0.25 US	5							1
36	1	129150-02941	BEARING, THRUST 0.25	1							2
39	1	129004-01190	SPACER	1							
40	1	124976-34850	CAP	1							

Remarks
(1)Under-sized (U.S.=0.25) parts.
(2)Over-sized (O.S.=0.25) parts.
(3)Spare parts.

N:Old $\overset{\text{Yes}}{\underset{\text{No}}{\leftrightarrows}}$ New, Q:Old $\overset{\text{No}}{\underset{\text{Yes}}{\leftrightarrows}}$ New, R:Old $\overset{\text{Yes}}{\underset{\text{Yes}}{\leftrightarrows}}$ New, S:Old $\overset{\text{No}}{\underset{\text{No}}{\leftrightarrows}}$ New, W:Add, Z:Discontinued, F:Interchangeable by set, K:Q'ty Change

Copyright (C) 2014 YANMAR CO., LTD. All RightsReserved.

Fig.2. GEAR HOUSING

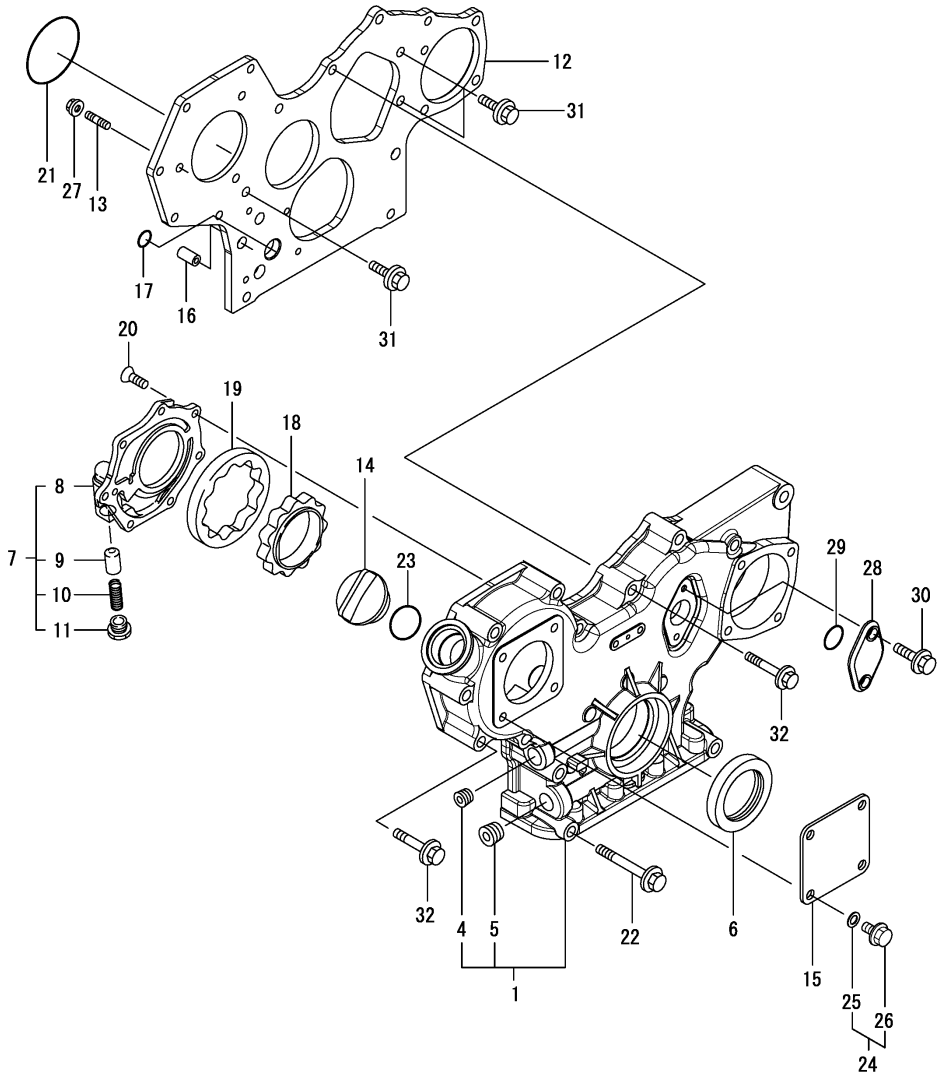

(A)=4JH4AE (D)=
(B)= (E)=
(C)= (F)=

No.	Lev.	Parts No.	Description	Q'ty (A)	(B)	(C)	(D)	(E)	(F)	I	R
1	1	129271-01500	COVER, GEAR CASE	1							
4	2	23876-030000	PLUG, R03	1							
5	2	23876-040000	PLUG, R04	1							
6	1	129795-01800	SEAL, OIL	1							
7	1	119802-32100	COVER ASSY	1							
8	2	119802-32070	COVER	1							
9	2	129900-32130	VALVE, RELIEF	1							
10	2	129418-32320	SPRING	1							
11	2	129001-32330	PLUG	1							
12	1	129004-01520	FLANGE, GEAR CASE	1							
13	1	119802-01561	STUD, M8X25	3							
14	1	124160-01751	COVER, FILLER	1							
15	1	124240-01871	COVER	1							
16	1	129795-01950	PIPE, KNOCK L=18	2							
17	1	119609-32040	O-RING, P16	4							
18	1	129508-32111	ROTOR, INNER	1							
19	1	129508-32120	ROTOR, OUTER	1							
20	1	119802-32130	SCREW, M6X16	7							
21	1	121850-51960	O-RING	1							
22	1	129001-91841	BOLT, M8X85	3							
22-1	1	26106-080852	BOLT, M8X 85 PLATED	3							R
	(A=*2008.12)										
23	1	24311-000320	O-RING, 1AP32.0	1							
24	1	124550-01590	BOLT, M8X16	4							
25	2	22190-080002	WASHER, SEAL 8	4							
26	2	26106-080162	BOLT, M8X 16 PLATED	4							
27	1	26306-080002	NUT, M8	3							
28	1	121023-01551	COVER	1							
29	1	24341-000240	O-RING, 1AS24.0	1							
30	1	26106-060162	BOLT, M6X 16 PLATED	2							
31	1	26106-080162	BOLT, M8X 16 PLATED	3							
32	1	26106-080552	BOLT, M8X 55 PLATED	11							

N:Old $\xleftrightarrow[\text{No}]{\text{Yes}}$ New, Q:Old $\xleftrightarrow[\text{Yes}]{\text{No}}$ New, R:Old $\xleftrightarrow[\text{Yes}]{\text{Yes}}$ New, S:Old $\xleftrightarrow[\text{No}]{\text{No}}$ New, W:Add, Z:Discontinued, F:Interchangeable by set, K:Q'ty Change

Copyright (C) 2014 YANMAR CO., LTD. All RightsReserved.

Fig.3. FLYWHEEL HOUSING

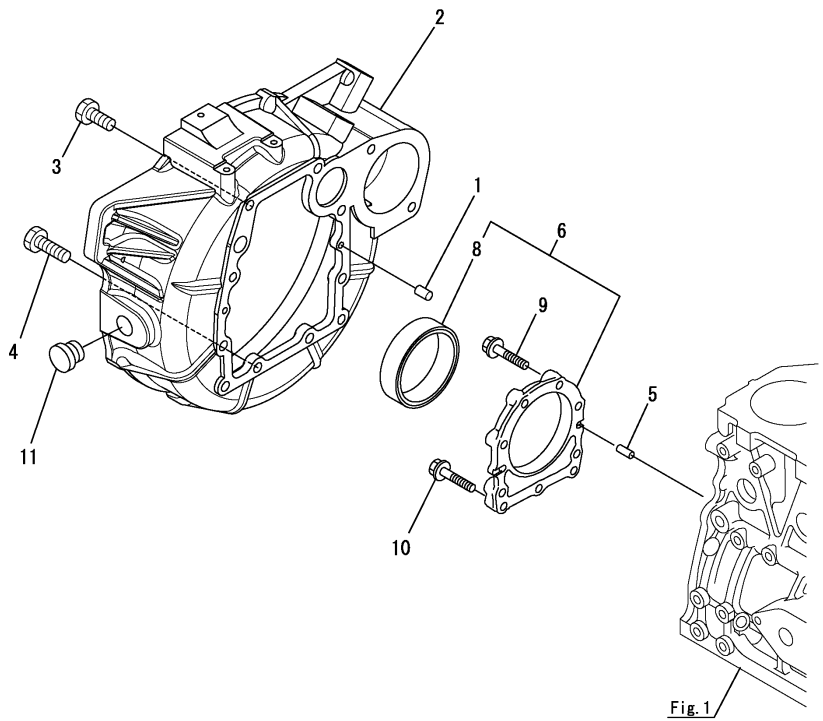

(A)=4JH4AE (D)=
(B)= (E)=
(C)= (F)=

No.	Lev.	Parts No.	Description	Q'ty (A)	(B)	(C)	(D)	(E)	(F)	I	R
1	1	129100-01580	PIN, 8X16	2							
2	1	129670-01600	HOUSING, FLYWHEEL	1							
2-1	1	129670-01601	HOUSING, FLYWHEEL	1						R	
	(A=*2013.06)										
3	1	26206-100252	BOLT, M10X 25 PLATED	6							
4	1	26206-100302	BOLT, M10X 30 PLATED	4							
5	1	129100-01580	PIN, 8X16	2							
6	1	129100-01640	CASE ASSY, OIL SEAL	1							
8	2	129795-01780	SEAL, OIL	1							
9	1	129486-01670	BOLT, M8X30	6							
10	1	26106-080352	BOLT, M8X 35 PLATED	3							
11	1	119620-01750	CAP	1						W	
	(A=E07083)										

N:Old $\overset{\text{Yes}}{\underset{\text{No}}{\leftrightarrow}}$ New, Q:Old $\overset{\text{No}}{\underset{\text{Yes}}{\leftrightarrow}}$ New, R:Old $\overset{\text{Yes}}{\underset{\text{Yes}}{\leftrightarrow}}$ New, S:Old $\overset{\text{No}}{\underset{\text{No}}{\leftrightarrow}}$ New, W:Add, Z:Discontinued, F:Interchangeable by set, K:Q'ty Change

Copyright (C) 2014 YANMAR CO., LTD. All RightsReserved.

Fig.4. MOUNTING FOOT

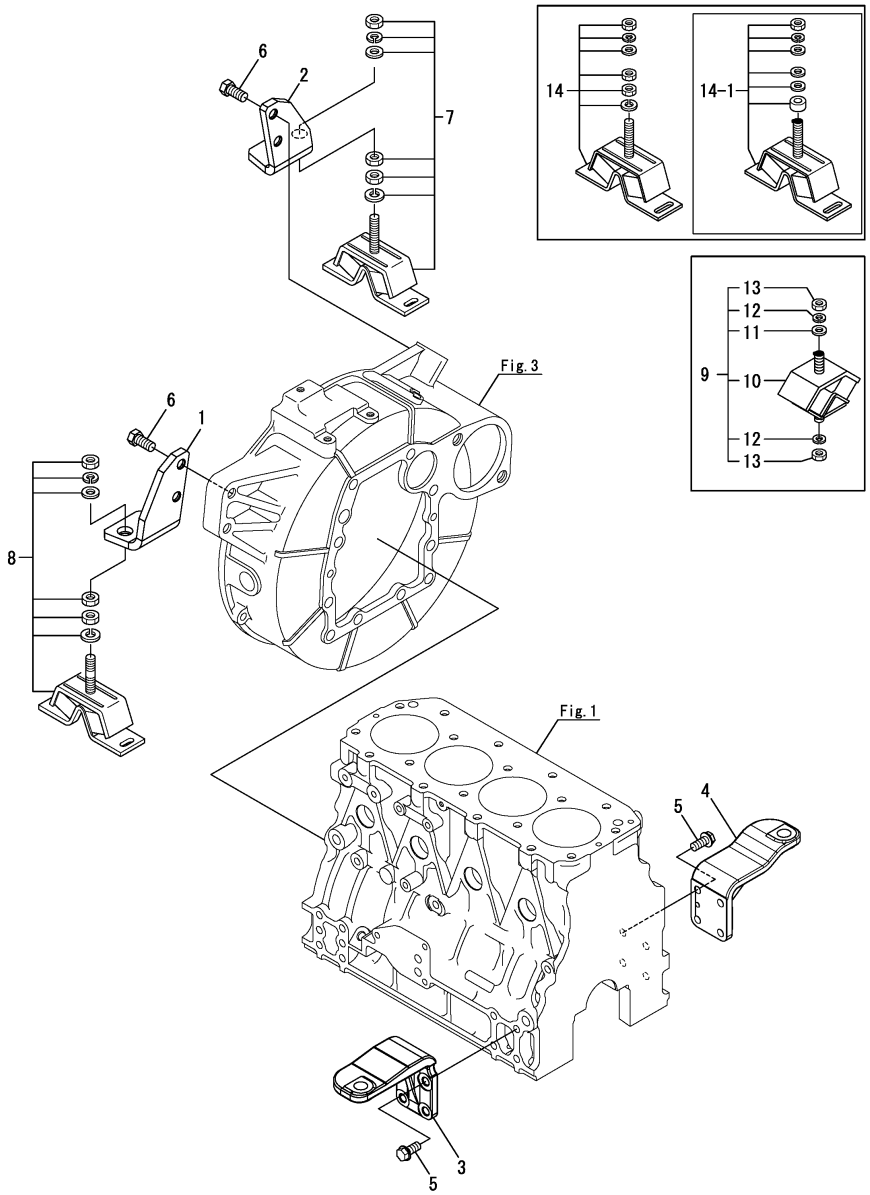

(A)=4JH4AE (D)=
(B)= (E)=
(C)= (F)=

No.	Lev.	Parts No.	Description	Q'ty (A)	(B)	(C)	(D)	(E)	(F)	I	R
1	1	129670-08231	FOOT	1							
2	1	129670-08241	FOOT	1							
3	1	129670-08211	FOOT	1							
4	1	129670-08220	FOOT	1							
5	1	26106-100222	BOLT, M10X 22 PLATED	8							
6	1	26116-120252	BOLT, M12X 25 PLATED	4							
7	1	129670-08350	MOUNT, FLEXIBLE 200	2							1
7-1	1	129670-08351	MOUNTING, FLEXIBLE	2						R	1
	(A=*2009.03)										
8	1	129670-08340	MOUNT, FLEXIBLE 150	2							1
8-1	1	129670-08341	MOUNTING, FLEXIBLE	2						R	1
	(A=*2009.03)										
9	1	796440-08630	ABSORBER ASSY, SHOCK	1							
10	2	196440-02380	ABSORBER, SHOCK 430	1							
11	2	196440-02390	WASHER	1							
12	2	22217-120000	WASHER, SPRING 12	2							
13	2	26716-120002	NUT, M12	2							
14	1	120149-08431	MOUNT, FLEXIBLE	2							2
14-1	1	129670-08390	MOUNT ASSY, FLEXIBLE	2						N	2
	(A=*2012.12)										

Remarks
(1)For KM35A2/KM35P.
(2)For SD50/KM4A-1.

N:Old $\frac{\text{Yes}}{\text{No}}$ New, Q:Old $\frac{\text{No}}{\text{Yes}}$ New, R:Old $\frac{\text{Yes}}{\text{Yes}}$ New, S:Old $\frac{\text{No}}{\text{No}}$ New, W:Add, Z:Discontinued, F:Interchangeable by set, K:Q'ty Change

Copyright (C) 2014 YANMAR CO., LTD. All RightsReserved.

Fig.5. LUB. OIL SUMP

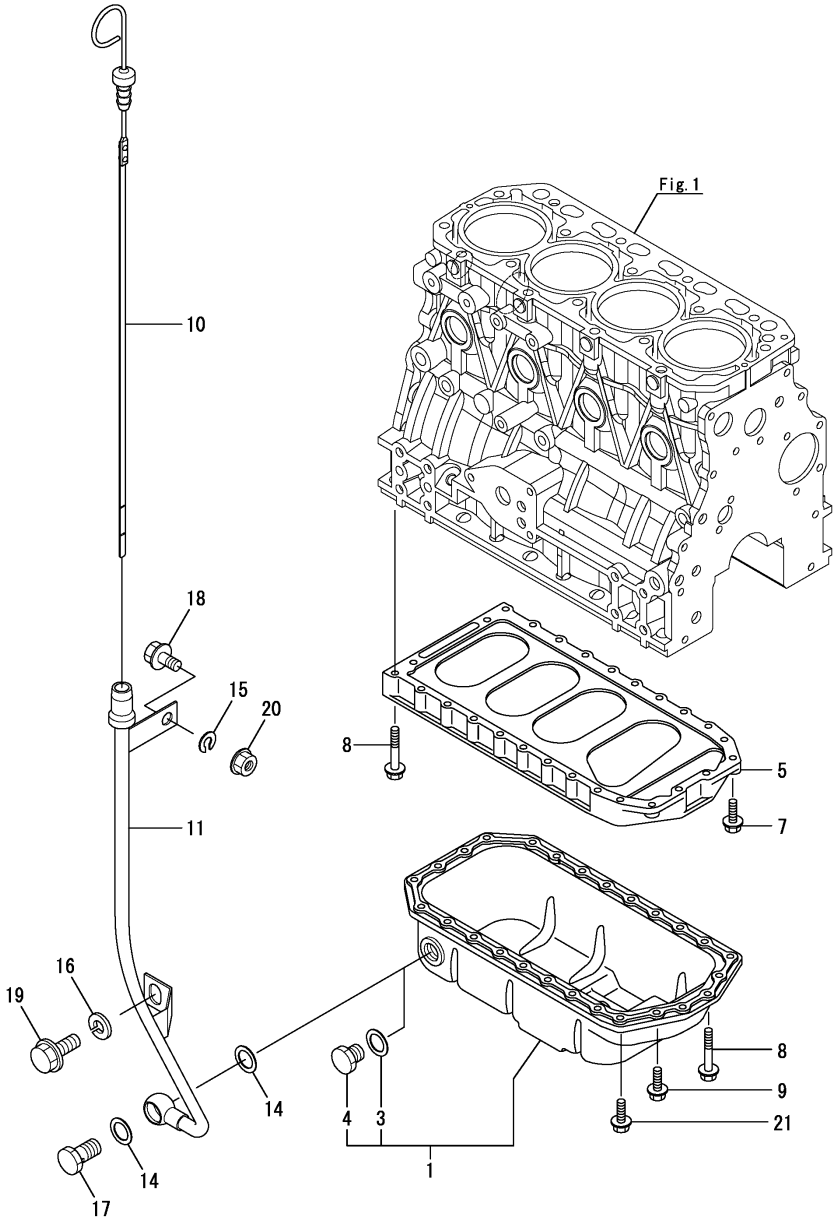

(A)=4JH4AE (D)=
(B)= (E)=
(C)= (F)=

No.	Lev.	Parts No.	Description	Q'ty (A)	(B)	(C)	(D)	(E)	(F)	I	R
1	1	129670-01700	SUMP, OIL	1							
3	2	23414-140000	GASKET, 14X1.0	1							
4	2	23887-140002	PLUG M14	1							
5	1	129400-01730	SPACER, OIL SUMP	1							
7	1	26106-080252	BOLT, M8X 25 PLATED	2							
8	1	26106-080452	BOLT, M8X 45 PLATED	24							
9	1	26106-080162	BOLT, M8X 16 PLATED	4							
10	1	129670-34800	DIPSTICK, OIL	1							
11	1	129271-34880	GUIDE ASSY, DIPSTICK	1							
14	1	22190-140002	WASHER, SEAL 14	2							
15	1	22217-080000	WASHER, SPRING 8	1							
16	1	22217-100000	WASHER, SPRING 10	1							
17	1	23857-080000	BOLT, JOINT 8	1							
18	1	26106-080162	BOLT, M8X 16 PLATED	1							
19	1	26106-100122	BOLT, M10X 12 PLATED	1							
19-1	1	26106-100162	BOLT, M10X 16 PLATED	1						R	
	(A=*2008.01)										
20	1	26366-080002	NUT, M8	1							
21	1	26106-080502	BOLT, M8X 50 PLATED	4							

N:Old $\frac{\text{Yes}}{\text{No}}$ New, Q:Old $\frac{\text{No}}{\text{Yes}}$ New, R:Old $\frac{\text{Yes}}{\text{Yes}}$ New, S:Old $\frac{\text{No}}{\text{No}}$ New, W:Add, Z:Discontinued, F:Interchangeable by set, K:Q'ty Change

Copyright (C) 2014 YANMAR CO., LTD. All RightsReserved.

Fig.6. LABEL

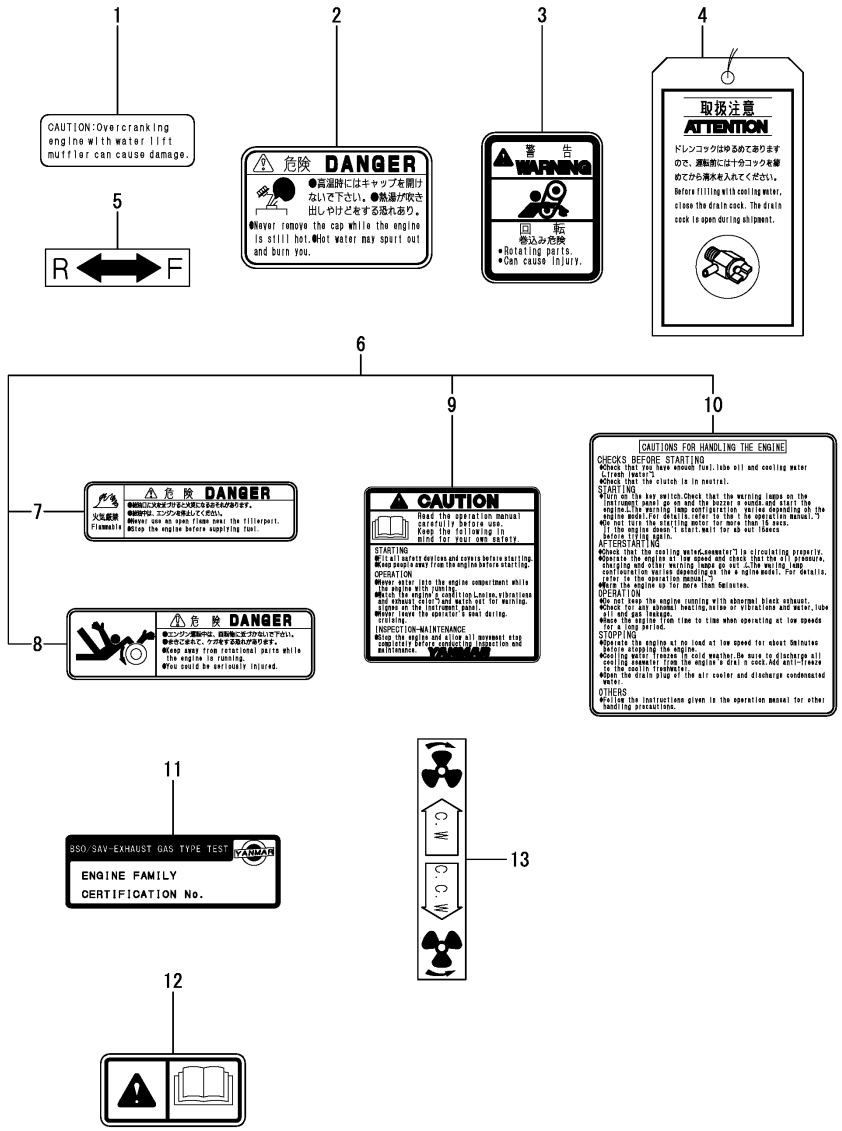

(A)=4JH4AE (D)=
(B)= (E)=
(C)= (F)=

No.	Lev.	Parts No.	Description	Q'ty (A)	(B)	(C)	(D)	(E)	(F)	I	R
1	1	128377-07150	LABEL, CAUTION	1						Z	
	(A=*2013.07)										
2	1	128377-07260	LABEL, PRESSURE CAP	1							
2-1	1	128990-07270	LABEL, PRESSURE CAP	1						N	
	(A=*2008.11)										
3	1	128377-07350	LABEL, CAUTION	1						Z	
	(A=*2013.07)										
4	1	123682-07852	LABEL, CAUTION	1							
5	1	177088-02430	LABEL	1							
6	1	128377-07190	LABEL,LOOSE PARTS	1							
7	2	128377-07400	LABEL,DANGER	2							
8	2	128377-07420	LABEL,DANGER	1							
9	2	128377-07450	LABEL,CAUTION	1							
10	2	128377-07460	LABEL,CAUTION	1							
11	1	129670-07570	LABEL, BSO2	1							
12	1	196630-12980	LABEL, CAUTION	1							
13	1	177073-02431	LABEL, DIRECTION	1							

N:Old $\overset{\text{Yes}}{\underset{\text{No}}{\leftrightarrows}}$ New, Q:Old $\overset{\text{No}}{\underset{\text{Yes}}{\leftrightarrows}}$ New, R:Old $\overset{\text{Yes}}{\underset{\text{Yes}}{\leftrightarrows}}$ New, S:Old $\overset{\text{No}}{\underset{\text{No}}{\leftrightarrows}}$ New, W:Add, Z:Discontinued, F:Interchangeable by set, K:Q'ty Change

Copyright (C) 2014 YANMAR CO., LTD. All RightsReserved.

Fig.7. CYLINDER HEAD

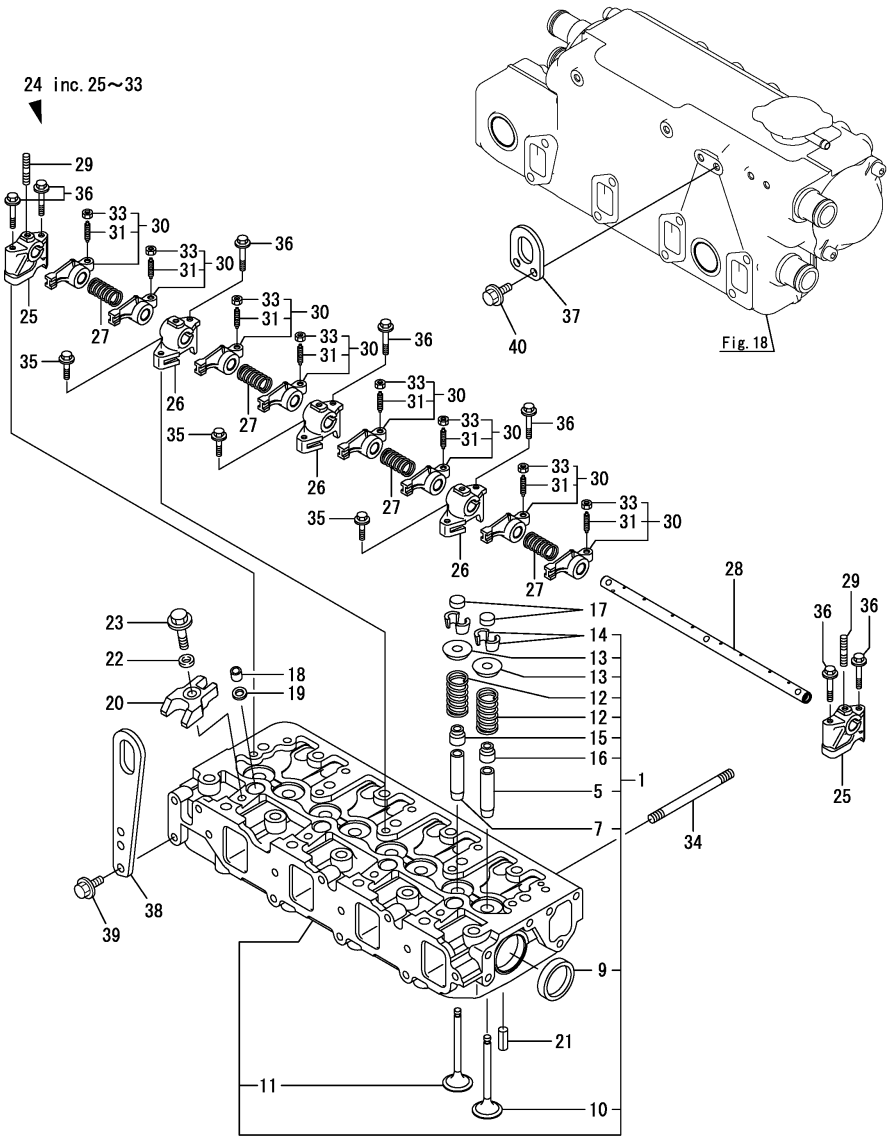

(A)=4JH4AE (D)=
(B)= (E)=
(C)= (F)=

No.	Lev.	Parts No.	Description	Q'ty (A)	(B)	(C)	(D)	(E)	(F)	I	R
1	1	129602-11700	HEAD ASSY, CYLINDER	1							
5	2	120130-11860	GUIDE, VALVE	4							1
7	2	129150-11810	GUIDE, VALVE	4							1
9	2	27241-400000	PLUG, 40	2							
10	2	129005-11100	VALVE, INTAKE	4							
11	2	129100-11112	VALVE, EXHAUST	4							
12	2	129795-11120	SPRING, VALVE	8							
13	2	129795-11180	RETAINER, SPRING	8							
14	2	27310-080001	COTTER, 8	8							
15	2	121400-11340	SEAL, VALVE STEM	4							
16	2	124460-11340	SEAL, VALVE STEM	4							
17	1	129150-11370	CAP, VALVE	8							
18	1	119802-11870	PROTECTOR, NOZZLE	4							
19	1	119625-11880	SEAT, NOZZLE	4							
20	1	129004-11900	RETAINER, NOZZLE	4							
21	1	22351-060012	PIN, SPRING 6.0X12	2							
22	1	120270-54410	WASHER, INJECTOR	4							
23	1	26106-080352	BOLT, M8X 35 PLATED	4							
24	1	129601-11241	SHAFT ASSY, ROCKER	1							
25	2	119802-11260	SUPPORT, ROCKER ARM	2							
26	2	119802-11270	SUPPORT, ROCKER ARM	3							
27	2	129150-11280	SPRING	4							
28	2	129601-11251	SHAFT, ROCKER ARM	1							
29	2	26226-080182	STUD, M8X 18	3							
30	2	129004-11650	ARM, ROCKER	8							
31	3	129150-11230	SCREW, VALVE ADJUST	8							
33	3	129150-11750	NUT, M8	8							
34	1	129693-44300	STUD	2							
35	1	26106-080252	BOLT, M8X 25 PLATED	3							
36	1	26106-080502	BOLT, M8X 50 PLATED	7							
37	1	129470-07230	LIFTER	1							
37-1	1	129670-07230	LIFTER	1							R
	(A=*2007.02)										
37-2	1	129670-07230	LIFTER	1							Z
	(A=*2007.12)										
38	1	129900-07900	LIFTER	2							
39	1	26106-080162	BOLT, M8X 16 PLATED	4							
40	1	26106-080162	BOLT, M8X 16 PLATED	2							Z
	(A=*2007.12)										

Remarks
(1)Spare parts.

N:Old $\frac{\text{Yes}}{\text{No}}$ New, Q:Old $\frac{\text{No}}{\text{Yes}}$ New, R:Old $\frac{\text{Yes}}{\text{Yes}}$ New, S:Old $\frac{\text{No}}{\text{No}}$ New, W:Add, Z:Discontinued, F:Interchangeable by set, K:Q'ty Change

Copyright (C) 2014 YANMAR CO., LTD. All RightsReserved.

Fig.8. BONNET

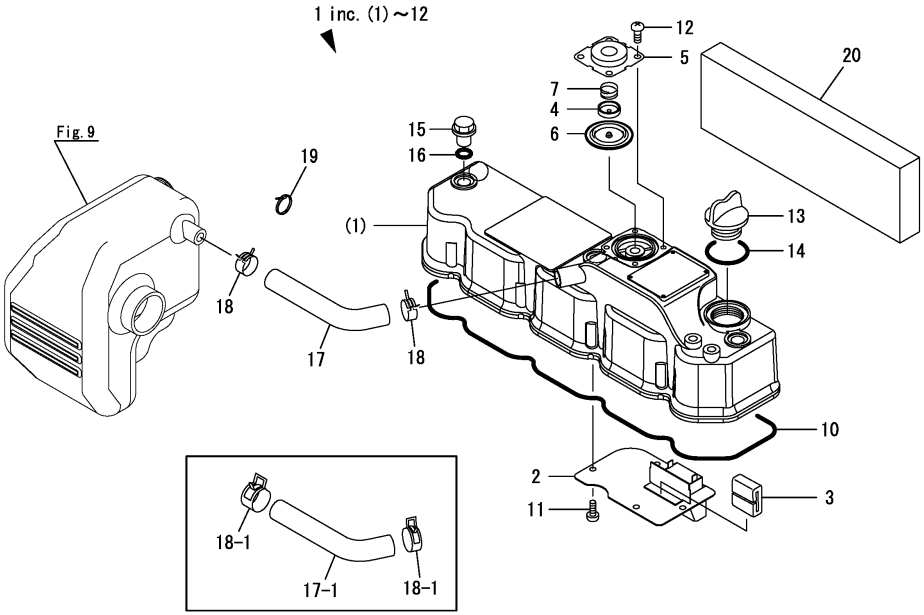

(A)=4JH4AE (D)=
(B)= (E)=
(C)= (F)=

No.	Lev.	Parts No.	Description	Q'ty (A)	(B)	(C)	(D)	(E)	(F)	I	R
1	1	129601-11350	BONNET ASSY, HEAD	1							
2	2	129004-03010	PLATE	1							
3	2	129150-03070	BAFFLE, BREATHER	1							
4	2	119802-03110	PLATE	1							
5	2	119802-03121	COVER, DIAPHRAGM	1							
6	2	119802-03130	DIAPHRAGM	1							
7	2	119802-03141	SPRING, DIAPHRAGM	1							
10	2	129601-11310	GASKET, BONNET	1							
11	2	22857-500100	SCREW, 5X10	4							
12	2	22857-500100	SCREW, 5X10	4							
13	1	124160-01751	COVER, FILLER	1							
14	1	24311-000320	O-RING, 1AP32.0	1							
15	1	124160-11360	KNOB	3							
16	1	24311-000120	O-RING, 1AP12.0	3							
17	1	129670-03090	PIPE, BREATHER	1							
17-1	1	129670-03091	PIPE, BREATHER	1						S	1
	(A=*2010.06)										
18	1	129410-03990	CLIP,HOSE 21.5	2							
18-1	1	124398-49700	CLIP, HOSE 24.0	2						S	1
	(A=*2010.06)										
19	1	128990-59890	BAND,200	1							
20	1	129670-11960	INSULATOR, NOISE	1							

Remarks
(1)Interchangeable by simultaneous replacement with No.17-1, 18-1.

N:Old ◄Yes/No► New, Q:Old ◄No/Yes► New, R:Old ◄Yes/Yes► New, S:Old ◄No/No► New, W:Add, Z:Discontinued, F:Interchangeable by set, K:Q'ty Change

Copyright (C) 2014 YANMAR CO., LTD. All RightsReserved.

Fig.9. SUCTION MANIFOLD

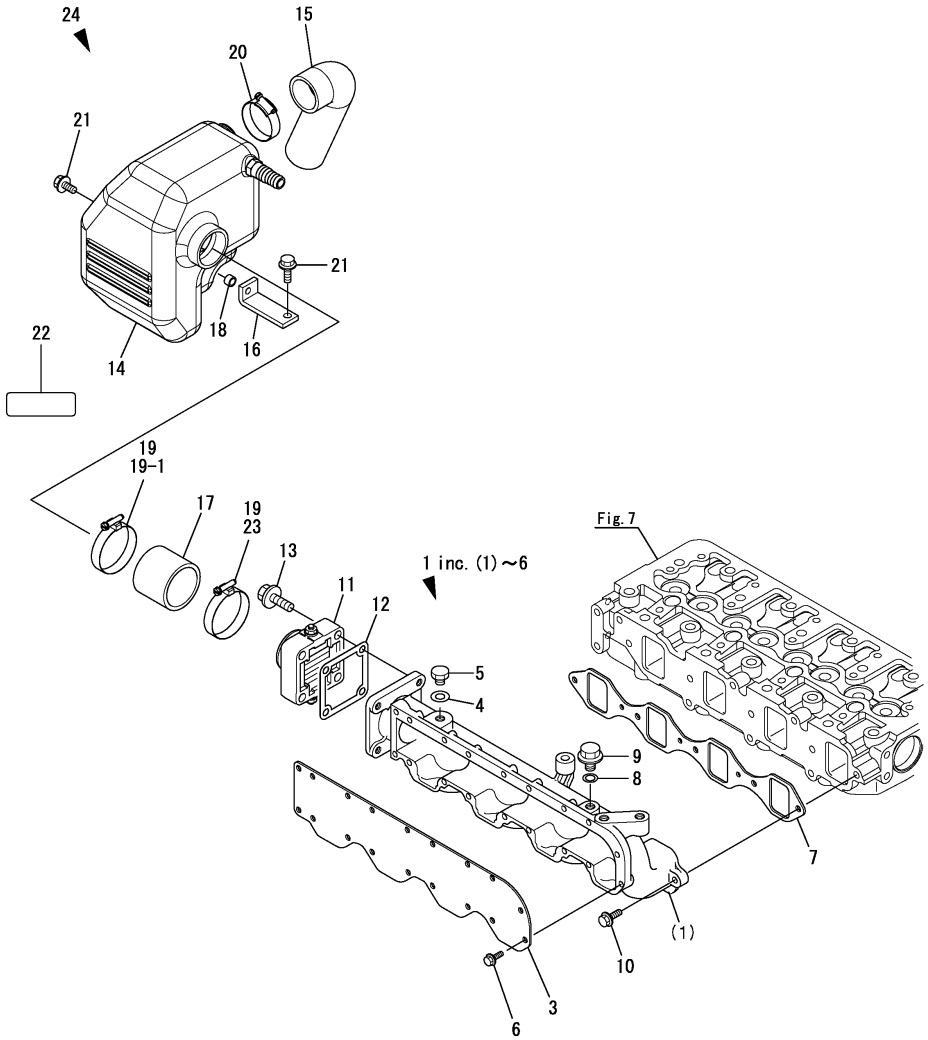

(A)=4JH4AE (D)=
(B)= (E)=
(C)= (F)=

No.	Lev.	Parts No.	Description	Q'ty (A)	(B)	(C)	(D)	(E)	(F)	I	R
1	1	129698-12100	MANIFOLD ASSY,INTAKE	1							
3	2	129470-12120	COVER, MANIFOLD	1							
4	2	23414-100000	GASKET, 10X1.0	1							
5	2	23887-100002	PLUG, 10	1							
6	2	26476-060142	SCREW, TAPPING M6X14	18							
7	1	129470-12130	GASKET, MANIFOLD	1							
8	1	22190-080002	WASHER, SEAL 8	1							
9	1	26106-080122	BOLT, M8X 12 PLATED	1							
10	1	26106-080202	BOLT, M8X 20 PLATED	5							
11	1	129120-77502	HEATER	1							
12	1	129150-77511	GASKET	1							
13	1	26106-080352	BOLT, M8X 35 PLATED	4							
14	1	129271-12311	SILENCER	1							
15	1	129670-12360	PIPE, SILENCER	1							
16	1	129670-12410	BRACKET, SILENCER	1							
16-1	1	129670-12411	BRACKET, SILENCER	1						R	
	(A=*2013.08)										
17	1	129271-12810	PIPE,SUC AIR	1							
18	1	128990-77430	COLLAR	1							
19	1	23000-060000	CLAMP, 60	2							
19-1	1	23000-060000	CLAMP, 60	1						K	
	(A=*2008.11)										
20	1	23000-048000	CLAMP, 48	1							
21	1	26106-080162	BOLT, M8X 16 PLATED	2							
22	1	128377-07150	LABEL, CAUTION	1						W	
	(A=*2008.11)										
23	1	23000-060000	CLAMP, 60	1						W	
	(A=*2008.11)										
24	1	129271-12290	SILENCER	1						W	1
	(A=*2008.11)										

Remarks
(1)Include No.14, 15, 17, 18, 19-1, 20, 22.

N:Old $\xleftarrow[\text{No}]{\text{Yes}}$ New, Q:Old $\xleftarrow[\text{Yes}]{\text{No}}$ New, R:Old $\xleftarrow[\text{Yes}]{\text{Yes}}$ New, S:Old $\xleftarrow[\text{No}]{\text{No}}$ New, W:Add, Z:Discontinued, F:Interchangeable by set, K:Q'ty Change

Copyright (C) 2014 YANMAR CO., LTD. All RightsReserved.

Fig.10. MIXING ELBOW

(A)=4JH4AE (D)=
(B)= (E)=
(C)= (F)=

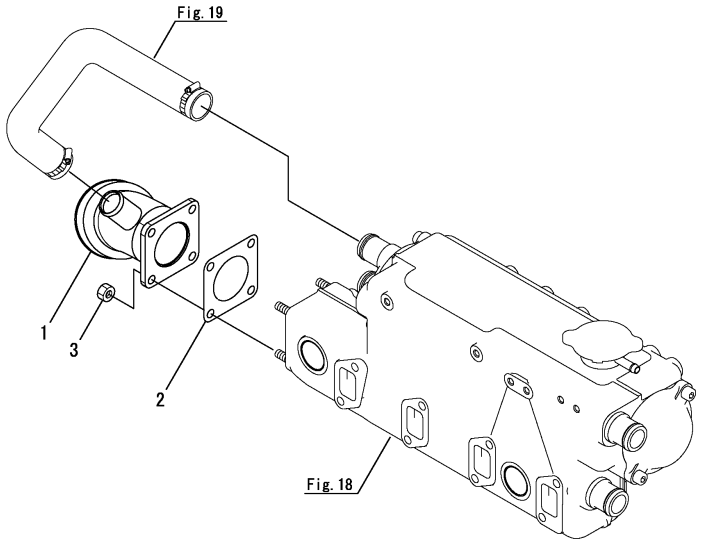

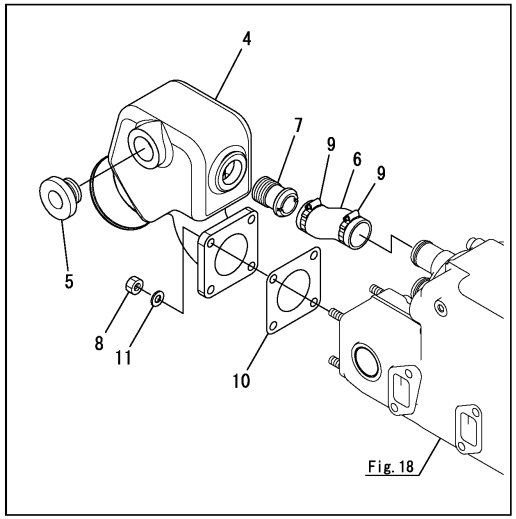

No.	Lev.	Parts No.	Description	Q'ty (A)	(B)	(C)	(D)	(E)	(F)	I	R
1	1	129670-13560	ELBOW	1							
1-1	1	129670-13561	ELBOW	1						N	
	(A=*2007.11)										
2	1	129472-18090	GASKET	1							
3	1	26703-080002	NUT, M8	4							
4	1	129470-13541	ELBOW	1							1
5	1	129472-13560	PLUG, PT3/4	1							1
6	1	129670-49280	PIPE, WATER	1							1
7	1	123325-49421	JOINT, PIPE	1							1
8	1	26703-080002	NUT, M8	4							1
9	1	129670-49500	CLIP, HOSE 38	2							1
10	1	129472-18090	GASKET	1							1
11	1	22137-080000	WASHER, 8	4						W	1
	(A=*2013.07)										

Remarks
(1)Optional parts

N:Old $\xleftrightarrow[\text{No}]{\text{Yes}}$ New, Q:Old $\xleftrightarrow[\text{Yes}]{\text{No}}$ New, R:Old $\xleftrightarrow[\text{Yes}]{\text{Yes}}$ New, S:Old $\xleftrightarrow[\text{No}]{\text{No}}$ New, W:Add, Z:Discontinued, F:Interchangeable by set, K:Q'ty Change

Copyright (C) 2014 YANMAR CO., LTD. All RightsReserved.

Fig.11. CAMSHAFT & DRIVING GEAR

(A)=4JH4AE (D)=
(B)= (E)=
(C)= (F)=

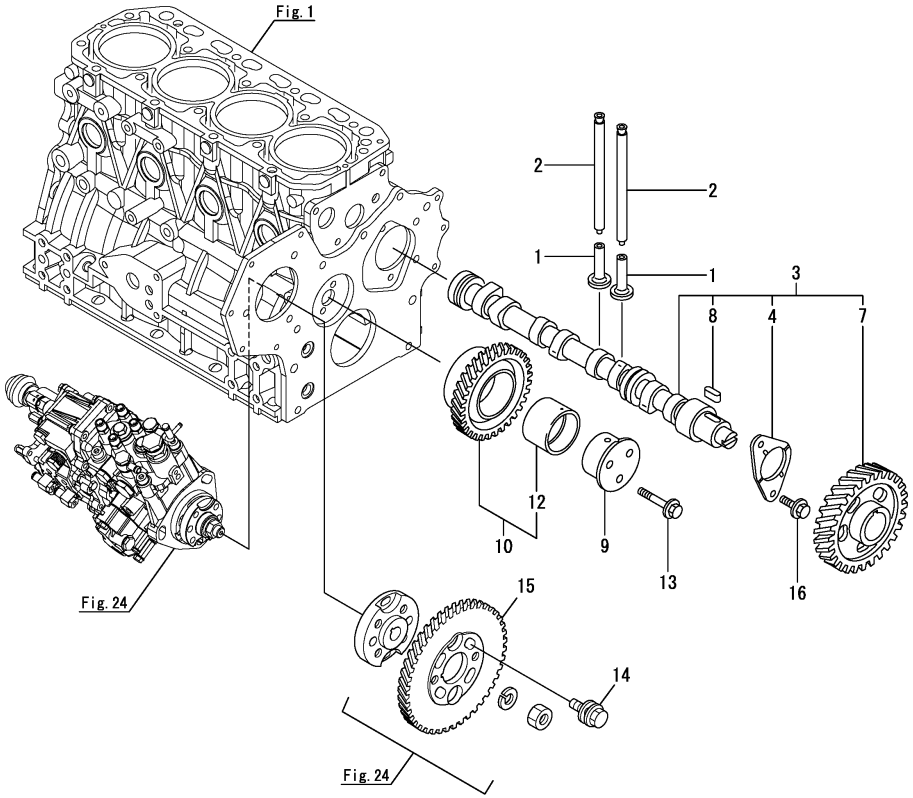

No.	Lev.	Parts No.	Description	Q'ty (A)	(B)	(C)	(D)	(E)	(F)	I	R
1	1	129150-14200	TAPPET	8							
2	1	129150-14400	ROD, PUSH L=178	8							
3	1	729402-14580	CAMSHAFT ASSY	1							
4	2	129150-02450	BEARING, THRUST	1							
7	2	129150-14101	GEAR, CAMSHAFT	1							
8	2	22512-070140	KEY, 7X 14	1							
9	1	119802-25051	SHAFT, IDLE	1							
10	1	119802-25101	GEAR ASSY, IDLE	1							
12	2	119802-25071	BUSH, IDLE GEAR	1							1
13	1	26106-080402	BOLT, M8X 40 PLATED	3							
14	1	129150-25301	BOLT	4							
15	1	119802-25901	GEAR, PUMP	1							
16	1	26106-080142	BOLT, M8X 14 PLATED	2							

Remarks
(1)Spare parts.

N:Old $\frac{\text{Yes}}{\text{No}}$ New, Q:Old $\frac{\text{No}}{\text{Yes}}$ New, R:Old $\frac{\text{Yes}}{\text{Yes}}$ New, S:Old $\frac{\text{No}}{\text{No}}$ New, W:Add, Z:Discontinued, F:Interchangeable by set, K:Q'ty Change

Copyright (C) 2014 YANMAR CO., LTD. All RightsReserved.

Fig.12. CRANKSHAFT & FLYWHEEL

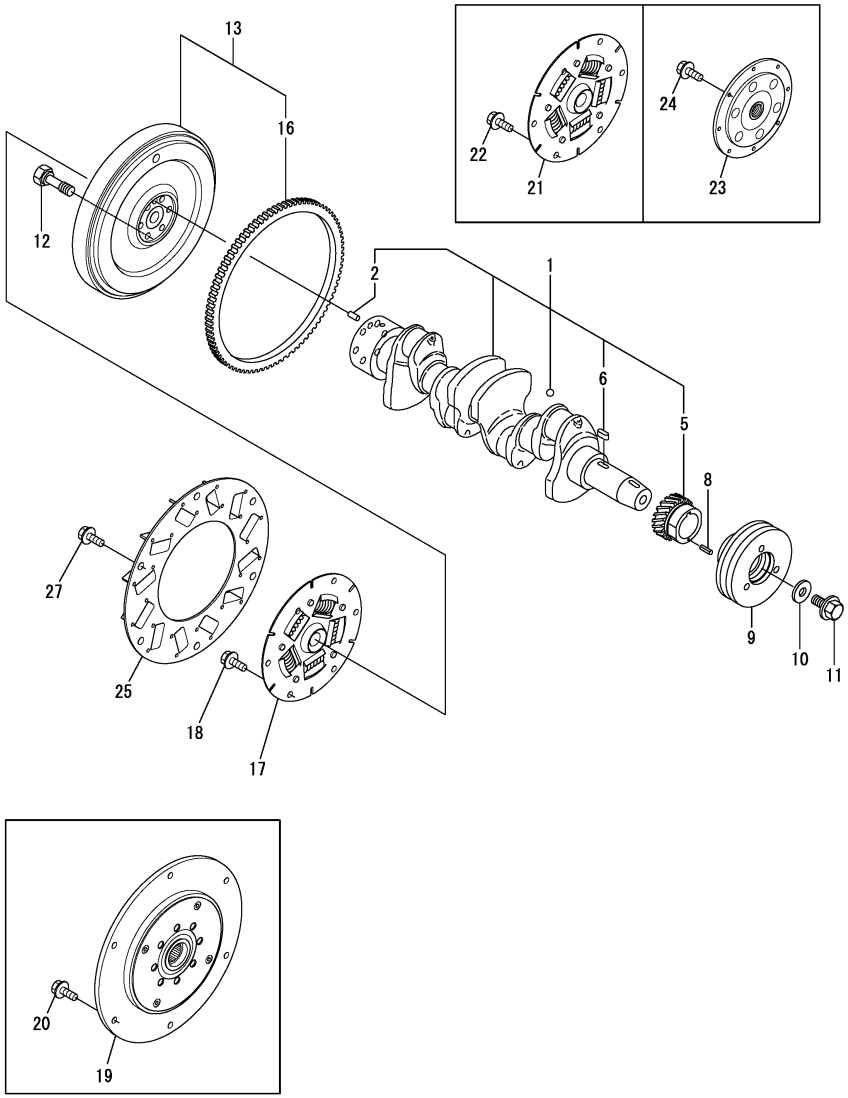

(A)=4JH4AE (D)=
(B)= (E)=
(C)= (F)=

No.	Lev.	Parts No.	Description	Q'ty (A)	(B)	(C)	(D)	(E)	(F)	I	R
1	1	129601-21002	CRANKSHAFT ASSY	1							
2	2	129100-01580	PIN, 8X16	1							
5	2	119802-21202	GEAR, CRANKSHAFT	1							
6	2	22512-070140	KEY, 7X 14	1							
8	1	22351-030010	PIN, SPRING 3.0X10	1							
9	1	119802-21660	V-PULLEY, 120	1							
10	1	129795-21661	WASHER	1							
11	1	121850-21680	BOLT	1							
12	1	121111-21501	BOLT, FLYWHEEL	6							
13	1	129670-21591	FLYWHEEL ASSY	1							
16	2	119865-21600	GEAR, RING	1							
17	1	177090-03500	DISK, DAMPER D190	1							1
18	1	26106-080162	BOLT, M8X 16 PLATED	6							1
19	1	196440-04310	COUPLING, 250 SP10	1							2
20	1	26106-080222	BOLT, M8X 22 PLATED	6							2
20-1	1	26106-080202	BOLT, M8X 20 PLATED	6						R	2
	(A=*2008.01)										
21	1	177070-03520	DISK, DAMPER D190	1							3
22	1	26106-080162	BOLT, M8X 16 PLATED	6							3
23	1	129673-81250	DISK, DAMPER	1							4
24	1	26106-080252	BOLT, M8X 25 PLATED	6							4
25	1	129670-81850	FAN, FLYWHEEL	1							3
27	1	26013-080142	BOLT, M8X 14	6							3

Remarks
(1)For KM4A1.
(2)For SD50.
(3)For KM35A2/KM35P.
(4)For ZF30M.

N:Old $\frac{\text{Yes}}{\text{No}}$ New, Q:Old $\frac{\text{No}}{\text{Yes}}$ New, R:Old $\frac{\text{Yes}}{\text{Yes}}$ New, S:Old $\frac{\text{No}}{\text{No}}$ New, W:Add, Z:Discontinued, F:Interchangeable by set, K:Q'ty Change

Copyright (C) 2014 YANMAR CO., LTD. All RightsReserved.

Fig.13. PISTON & CONNECTING ROD

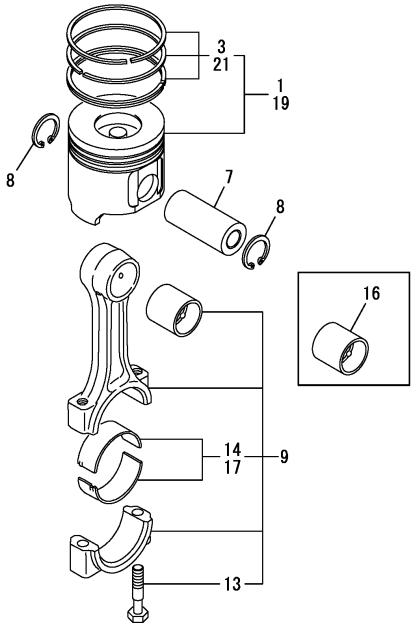

Remarks
(1)Spare parts.
(2)Over-sized (O.S.=0.25) parts.
(3)Under-sized (U.S.=0.25) parts.

(A)=4JH4AE (D)=
(B)= (E)=
(C)= (F)=

No.	Lev.	Parts No.	Description	Q'ty (A)	(B)	(C)	(D)	(E)	(F)	I	R
1	1	129670-22020	PISTON ASSY	4							
3	2	129005-22500	RING SET, PISTON	4							
7	1	129202-22300	PIN, PISTON D26 L70	4							
8	1	22252-000260	RING, 26	8							
9	1	729402-23100	ROD ASSY, CONNECTING	4							
13	3	121550-23200	BOLT, CONNECTING ROD	8							
14	2	129150-23601	BEARING, CRANK PIN	4							
16	1	129100-23910	BEARING, PISTON PIN	4							1
17	1	129150-23611	BEARING, 0.25 US	4							3
19	1	129005-22900	PISTON ASSY, 0.25 OS	4							2
21	2	129005-22950	RING SET, 0.25 OS	4							2

N:Old $\xleftrightarrow[\text{No}]{\text{Yes}}$ New, Q:Old $\xleftrightarrow[\text{Yes}]{\text{No}}$ New, R:Old $\xleftrightarrow[\text{Yes}]{\text{Yes}}$ New, S:Old $\xleftrightarrow[\text{No}]{\text{No}}$ New, W:Add, Z:Discontinued, F:Interchangeable by set, K:Q'ty Change

Copyright (C) 2014 YANMAR CO., LTD. All RightsReserved.

Fig.14. LUB. OIL SYSTEM

(A)=4JH4AE (D)=
(B)= (E)=
(C)= (F)=

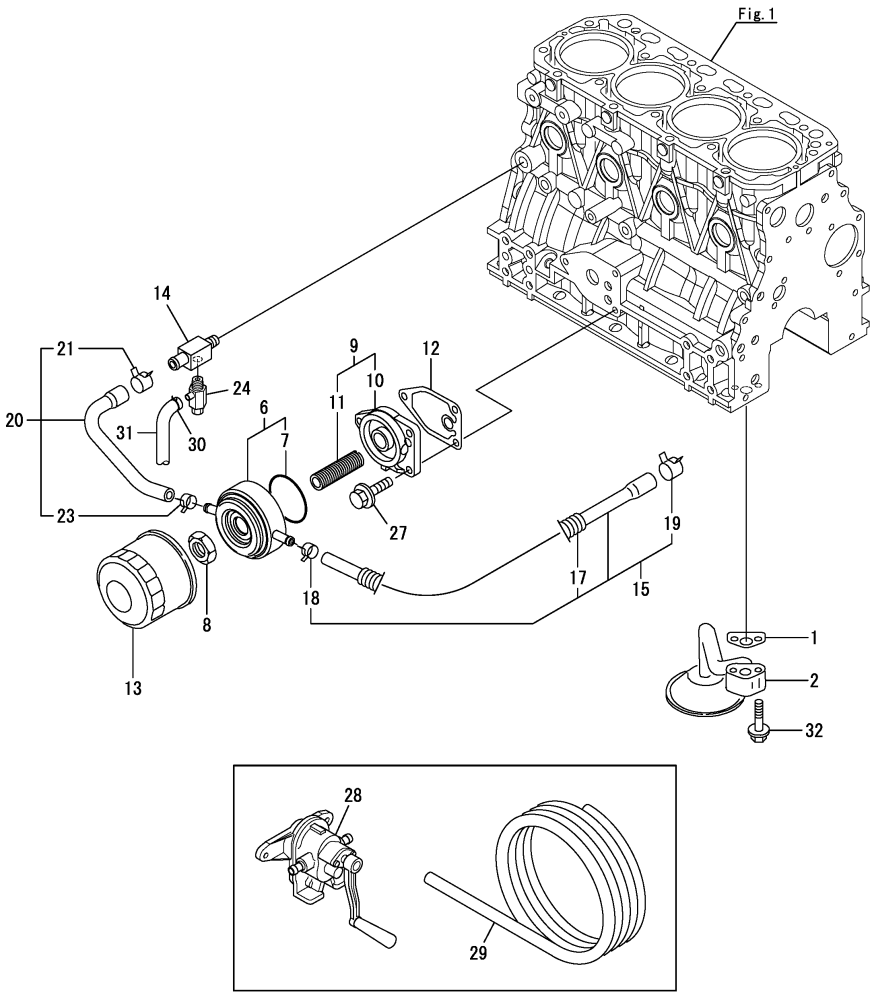

No.	Lev.	Parts No.	Description	Q'ty (A)	(B)	(C)	(D)	(E)	(F)	I	R
1	1	129150-35042	GASKET	1							
2	1	129670-35090	PIPE ASSY, OIL INLET	1							
6	1	129508-33010	COOLER ASSY, OIL	1							
7	2	129508-33050	O-RING	1							
8	1	129417-33110	NUT	1							
8-1	1	129417-33111	NUT, OIL COOLER	1						R	
	(A=*2012.03)										
9	1	129006-35100	BRACKET ASSY, FILTER	1							
10	2	119802-35110	BRACKET, FILTER	1							
11	2	129417-35150	STUD, L=67	1							
12	1	129150-35111	GASKET	1							
13	1	129150-35170	FILTER,LO	1							1
14	1	129006-44480	JOINT	1							
15	1	129657-49020	PIPE ASSY, WATER	1							
17	2	129657-49180	TUBE, CORRUGATED	1							
18	2	23080-015000	CLAMP, 15	1							
19	2	23080-018000	CLAMP, 18	1							
19-1	2	171008-03990	CLIP, HOSE 18.5	1						R	
	(A=E05303)										
20	1	129508-49030	PIPE ASSY, WATER	1							
21	2	171008-03990	CLIP, HOSE 18.5	1							
23	2	23080-015000	CLAMP, 15	1							
24	1	119620-49290	COCK ASSY, 1/4	1							
27	1	26106-080202	BOLT, M8X 20 PLATED	3							
28	1	124413-39100	PUMP ASSY, WASTE	1							2
29	1	43720-001220	PIPE	1							2
29-1	1	129670-39990	HOSE,OIL DRAIN 3M	1						R	2
	(A=*2008.01)										
30	1	124460-77680	RETAINER	1							
31	1	23061-070300	PIPE, 7X 300	1							
32	1	26106-080352	BOLT, M8X 35 PLATED	2							

Remarks
(1)Spare parts.
(2)Optional parts

N:Old $\xleftrightarrow[\text{No}]{\text{Yes}}$ New, Q:Old $\xleftrightarrow[\text{Yes}]{\text{No}}$ New, R:Old $\xleftrightarrow[\text{Yes}]{\text{Yes}}$ New, S:Old $\xleftrightarrow[\text{No}]{\text{No}}$ New, W:Add, Z:Discontinued, F:Interchangeable by set, K:Q'ty Change

Copyright (C) 2014 YANMAR CO., LTD. All RightsReserved.

Fig.15. LUB. OIL PIPE

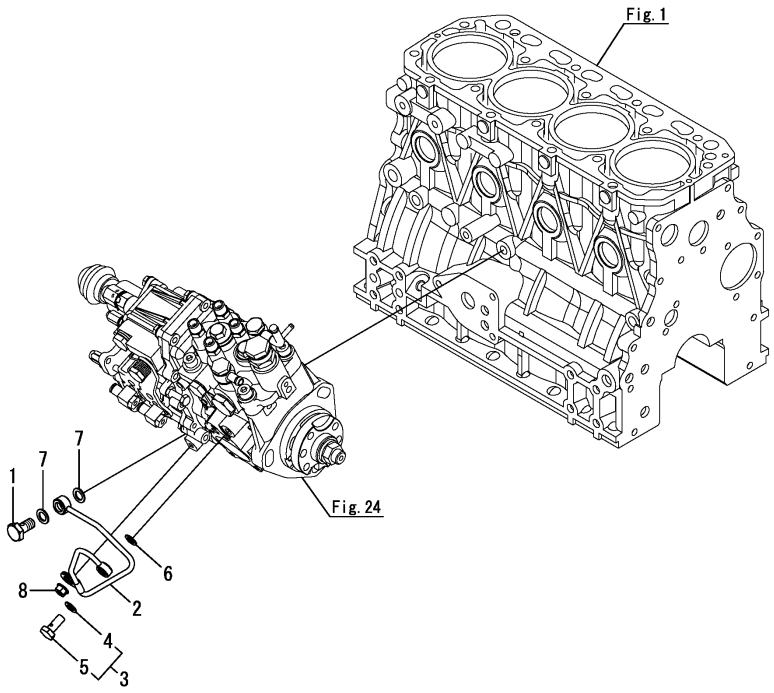

(A)=4JH4AE (D)=
(B)= (E)=
(C)= (F)=

No.	Lev.	Parts No.	Description	Q'ty (A)	(B)	(C)	(D)	(E)	(F)	I	R
1	1	124160-39140	BOLT, PIPE JOINT M10	1							
2	1	119802-39450	PIPE ASSY, OIL	1							
3	1	129005-59830	BOLT ASSY, JOINT M8	1							
4	2	22190-080002	WASHER, SEAL 8	1							
5	2	23857-030000	BOLT, JOINT 3	1							
6	1	22190-080002	WASHER, SEAL 8	1							
7	1	22190-100002	WASHER, SEAL 10	2							
8	1	26366-060002	NUT, M6	1							

N:Old $\overset{\text{Yes}}{\underset{\text{No}}{\leftrightarrows}}$ New, Q:Old $\overset{\text{No}}{\underset{\text{Yes}}{\leftrightarrows}}$ New, R:Old $\overset{\text{Yes}}{\underset{\text{Yes}}{\leftrightarrows}}$ New, S:Old $\overset{\text{No}}{\underset{\text{No}}{\leftrightarrows}}$ New, W:Add, Z:Discontinued, F:Interchangeable by set, K:Q'ty Change

Copyright (C) 2014 YANMAR CO., LTD. All RightsReserved.

Fig.16. COOLING SEA WATER PUMP

(A)=4JH4AE (D)=
(B)= (E)=
(C)= (F)=

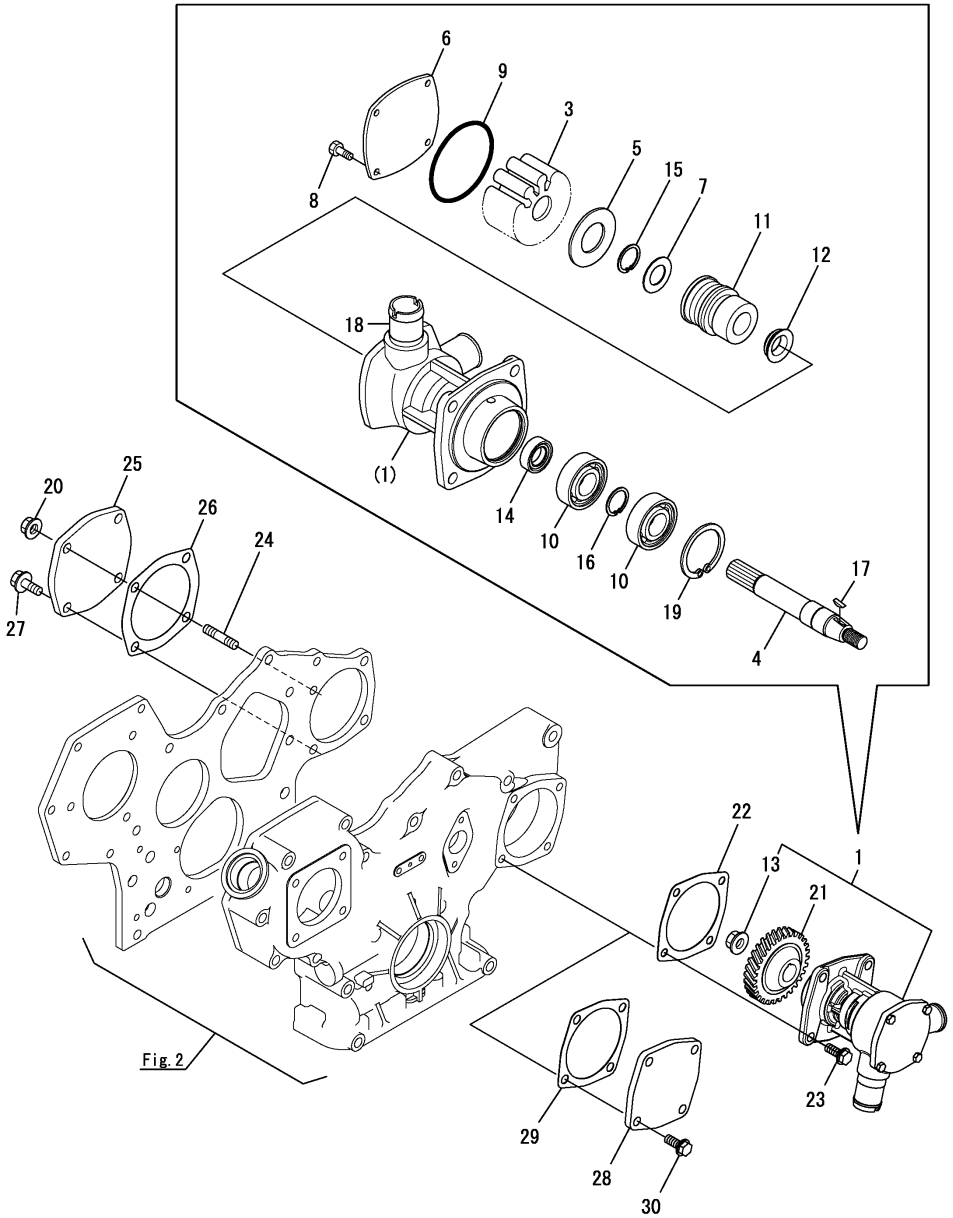

No.	Lev.	Parts No.	Description	Q'ty (A)	(B)	(C)	(D)	(E)	(F)	I	R
1	1	129271-42501	PUMP ASSY, WATER	1							
3	2	129670-42531	IMPELLER	1							
4	2	X0146531	SHAFT	1							
5	2	129670-42540	PLATE	1							
6	2	129670-42520	COVER	1							
7	2	129670-42550	WASHER	1							
8	2	129271-42510	SCREW	4							
9	2	119773-42570	O-RING	1							
10	2	X03431483	BEARING	2							
11	2	129670-42560	SEAL, MECHANICAL	1							
12	2	X02230015	RING	1							
13	2	X00190001	NUT, LOCK	1							
14	2	X02233001	SEAL, LIP	1							
15	2	129670-42570	CIRCLIP	1							
16	2	X00370017	CIRCLIP	1							
17	2	129670-42580	KEY	1							
18	2	123325-49421	JOINT, PIPE	1							
19	2	X00371040	CIRCLIP	1							
20	1	26306-080002	NUT, M8	1							
21	1	129271-42700	GEAR, PUMP	1							
22	1	129150-01881	GASKET	1							
23	1	26106-080202	BOLT, M8X 20 PLATED	4							
24	1	121450-01560	STUD, M8X22	1							
25	1	124240-01871	COVER	1							
26	1	129150-01881	GASKET	1							
26-1	1	129C26-01890	GASKET, HO-P	1							R
	(A=*2012.06.)										
27	1	26106-080252	BOLT, M8X 25 PLATED	3							
28	1	124240-01871	COVER	1							
29	1	129150-01881	GASKET	1							
29-1	1	129C26-01890	GASKET, HO-P	1							R
	(A=*2012.06.)										
30	1	26106-080162	BOLT, M8X 16 PLATED	4							

N:Old $\overset{\text{Yes}}{\underset{\text{No}}{\leftrightarrow}}$ New, Q:Old $\overset{\text{No}}{\underset{\text{Yes}}{\leftrightarrow}}$ New, R:Old $\overset{\text{Yes}}{\underset{\text{Yes}}{\leftrightarrow}}$ New, S:Old $\overset{\text{No}}{\underset{\text{No}}{\leftrightarrow}}$ New, W:Add, Z:Discontinued, F:Interchangeable by set, K:Q'ty Change

Copyright (C) 2014 YANMAR CO., LTD. All RightsReserved.

Fig.17. COOLING FRESH WATER PUMP

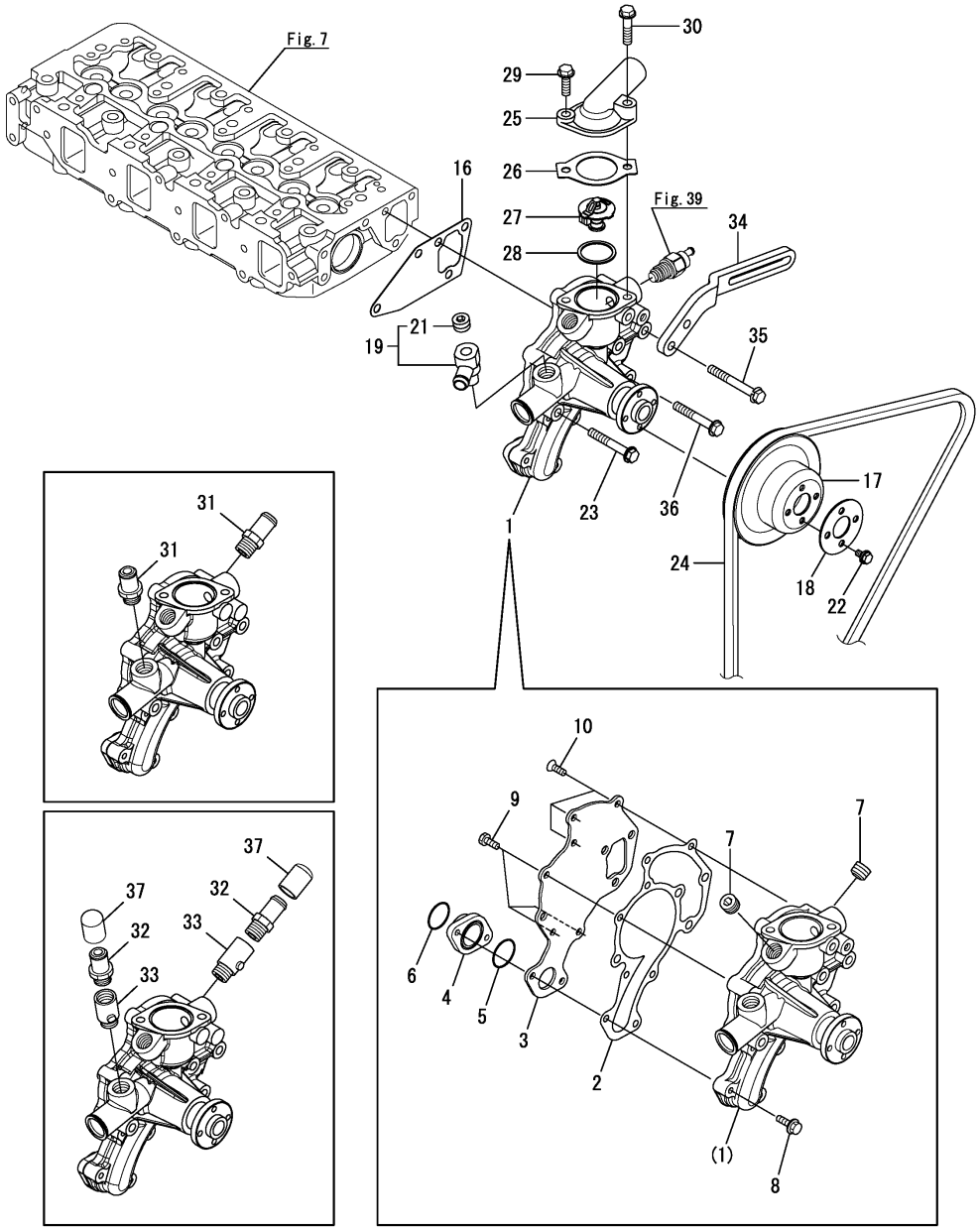

(A)=4JH4AE (D)=
(B)= (E)=
(C)= (F)=

No.	Lev.	Parts No.	Description	Q'ty (A)	(B)	(C)	(D)	(E)	(F)	I	R
1	1	129271-42001	PUMP ASSY, WATER	1							
2	2	129150-42059	GASKET	1							
3	2	129263-42120	PLATE	1							
4	2	129150-42301	FLANGE	1							
5	2	24358-240310	O-RING, 524031	1							
6	2	129054-42320	O-RING	1							
7	2	129916-49740	PLUG, R03	2							
8	2	26106-060202	BOLT, M6X 20 PLATED	2							
9	2	26116-060162	BOLT, M6X 16 PLATED	3							
10	2	26577-060142	SCREW M 6X 14	3							
16	1	129486-42050	GASKET, WATER PUMP	1							
17	1	129550-42350	V-PULLEY, D=120	1							
18	1	129156-44760	WASHER	1							
19	1	129270-49400	JOINT ASSY, PUMP	1							
21	2	23875-030000	PLUG, R03	1							
22	1	26106-060102	BOLT, M6X 10 PLATED	4							
23	1	26106-080552	BOLT, M8X 55 PLATED	2							
24	1	25152-004300	V-BELT, A43	1							
25	1	129470-49540	COVER, THERMOSTAT	1							
26	1	129795-49551	GASKET	1							
27	1	129470-49801	THERMOSTAT, 76.5	1							
28	1	129470-49810	GASKET, THERMOSTAT	1							
28-1	1	129150-49811	GASKET, THERMOSTAT	1						R	
	(A=*2009.12)										
29	1	26106-080252	BOLT, M8X 25 PLATED	1							
30	1	26106-080352	BOLT, M8X 35 PLATED	1							
31	1	128990-49320	JOINT, 3/8	2							
32	1	128990-49320	JOINT, 3/8	2							
33	1	129670-49390	COCK ASSY,R1/4XRP3/8	2							
34	1	129495-77330	ADJUSTER, BELT	1							
35	1	26013-080652	BOLT, M8X 65	1							
36	1	26106-080552	BOLT, M8X 55 PLATED	1							
37	1	128990-49400	CAP,WATER	2						W	
	(A=*2013.07)										

N:Old $\xleftrightarrow[\text{No}]{\text{Yes}}$ New, Q:Old $\xleftrightarrow[\text{Yes}]{\text{No}}$ New, R:Old $\xleftrightarrow[\text{Yes}]{\text{Yes}}$ New, S:Old $\xleftrightarrow[\text{No}]{\text{No}}$ New, W:Add, Z:Discontinued, F:Interchangeable by set, K:Q'ty Change

Copyright (C) 2014 YANMAR CO., LTD. All RightsReserved.

Fig.18. COOLING FRESH WATER COOLER

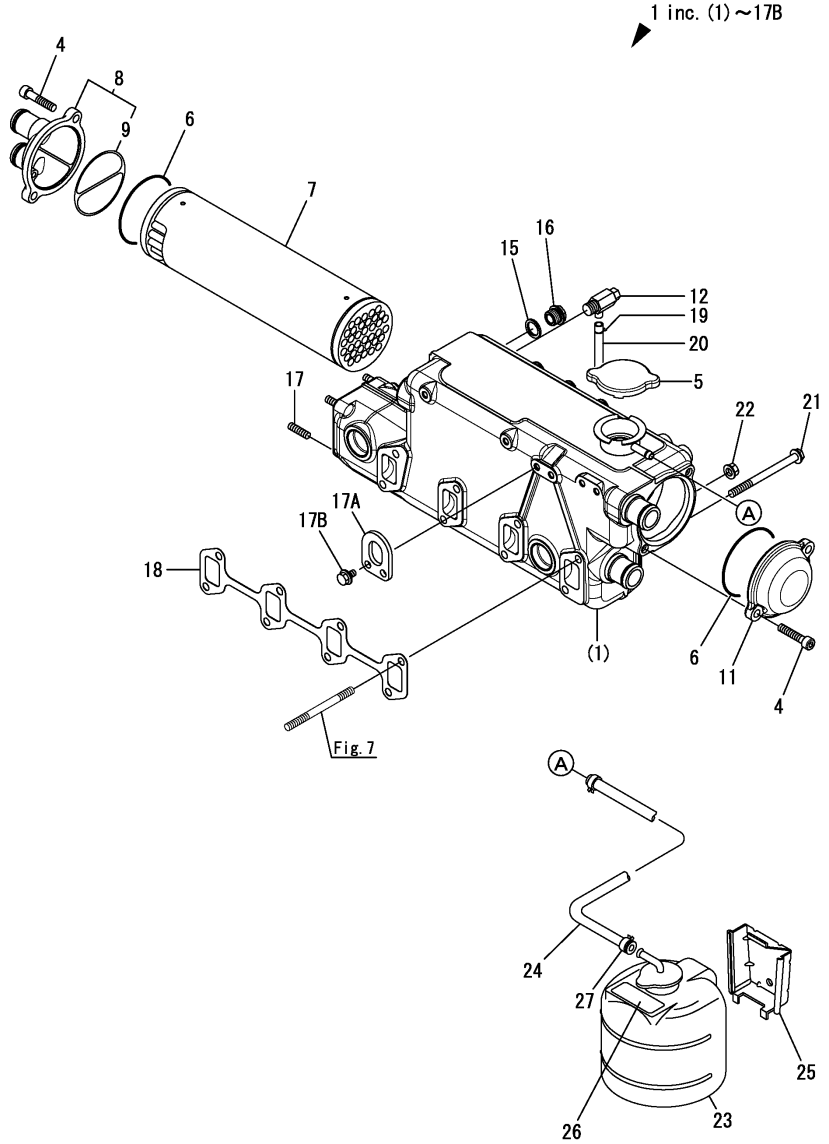

(A)=4JH4AE (D)=
(B)= (E)=
(C)= (F)=

No.	Lev.	Parts No.	Description	Q'ty (A)	(B)	(C)	(D)	(E)	(F)	I	R
1	1	129670-44910	COOLER ASSY, WATER	1							
1-1	1	129670-44911	COOLER ASSY, CW	1						N	
	(A=*2012.12.)										
4	2	129673-44090	BOLT, M8X40	4							
5	2	129673-44131	CAP	1							
6	2	129670-44150	O-RING, 74.5X3	2							
7	2	129670-44460	CORE ASSY, COOLER	1							
8	2	129670-44430	COVER CMP,COOLER A	1							
9	3	120322-33050	GASKET	1							
11	2	129670-44450	COVER, COOLER	1							
12	2	119620-49290	COCK ASSY, 1/4	1							
15	2	23414-170000	GASKET, 17X1.0	1							
16	2	23893-030002	PLUG, G3/8	1							
16-1	2	23894-030002	PLUG, G3/8	1						R	
	(A=*2007.12)										
17	2	129670-13600	STUD	4							
17A	2	129670-07230	LIFTER	1						W	
	(A=*2007.12)										
17B	2	26450-080162	BOLT, M8X 16	2						W	
	(A=*2007.12)										
18	1	129550-13110	GASKET	1							
19	1	124460-77680	RETAINER	1							
20	1	23061-070300	PIPE, 7X 300	1							
21	1	26106-081002	BOLT, M8X100 PLATED	6							
22	1	26366-080002	NUT, M8	2							
23	1	128397-44500	TANK ASSY, SUB	1							
24	1	129270-44501	PIPE	1							
25	1	128397-44510	BRACKET	1							
26	1	129670-44570	LABEL, SUB-TANK	1							
27	1	23010-013000	CLAMP 13	2							

N:Old $\xleftrightarrow[\text{No}]{\text{Yes}}$ New, Q:Old $\xleftrightarrow[\text{Yes}]{\text{No}}$ New, R:Old $\xleftrightarrow[\text{Yes}]{\text{Yes}}$ New, S:Old $\xleftrightarrow[\text{No}]{\text{No}}$ New, W:Add, Z:Discontinued, F:Interchangeable by set, K:Q'ty Change

Copyright (C) 2014 YANMAR CO., LTD. All RightsReserved.

Fig.19. COOLING SEA WATER PIPE

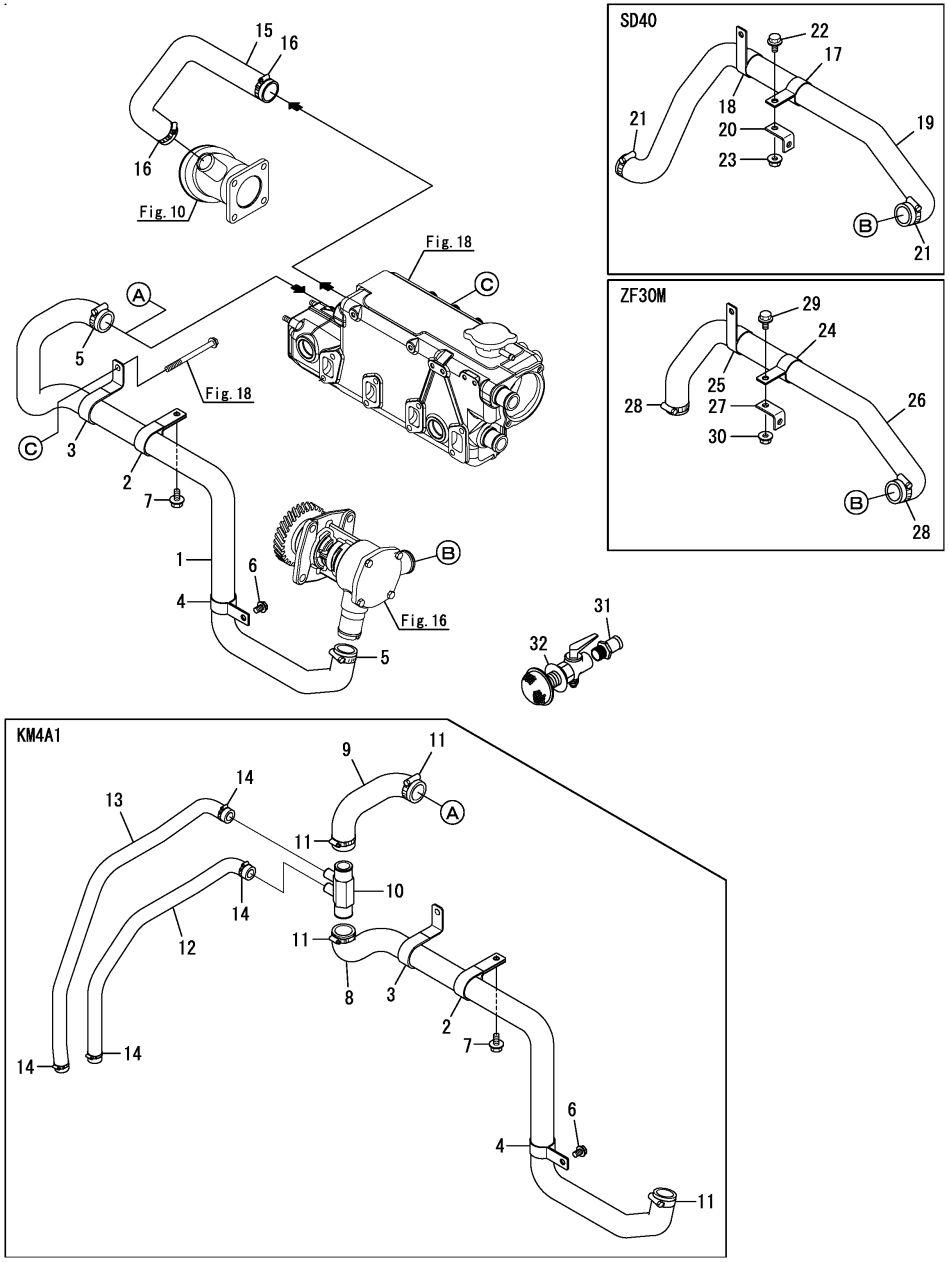

(A)=4JH4AE (D)=
(B)= (E)=
(C)= (F)=

No.	Lev.	Parts No.	Description	Q'ty (A)	(B)	(C)	(D)	(E)	(F)	I	R
1	1	129670-49020	PIPE, WATER	1							
2	1	129671-49120	RETAINER	1							
3	1	129670-49360	RETAINER, PIPE	1							
4	1	129271-49110	RETAINER, PIPE	1							
5	1	129670-49500	CLIP, HOSE 38	2							
6	1	26106-080122	BOLT, M8X 12 PLATED	1							
7	1	26106-080162	BOLT, M8X 16 PLATED	1							
8	1	129670-49090	PIPE, WATER	1							
9	1	129670-49220	PIPE, WATER	1							
10	1	129670-49410	JOINT	1							
11	1	129670-49500	CLIP, HOSE 38	4							
12	1	129670-49230	PIPE, WATER	1							
13	1	129670-49240	PIPE, WATER	1							
14	1	23000-022000	CLAMP, 22	4							
15	1	129670-49150	PIPE, WATER	1							
16	1	129670-49500	CLIP, HOSE 38	2							
17	1	129271-49110	RETAINER, PIPE	1							
18	1	129671-49110	RETAINER	1							
19	1	129670-49260	PIPE,CSW S-DRIVE	1							
20	1	129670-49270	BRACKET	1							
21	1	129670-49500	CLIP, HOSE 38	2							
22	1	26106-080122	BOLT, M8X 12 PLATED	1							
23	1	26366-080002	NUT, M8	1							
24	1	129271-49110	RETAINER, PIPE	1							
25	1	129671-49110	RETAINER	1							
26	1	129670-49250	PIPE, WATER	1							
27	1	129670-49270	BRACKET	1							
28	1	129670-49500	CLIP, HOSE 38	2							
29	1	26106-080122	BOLT, M8X 12 PLATED	1							
30	1	26366-080002	NUT, M8	1							
31	1	43530-500570	JOINT, PIPE	1							1
32	1	43662-025030	COCK ASSY, KINGSTON	1							1
32-1	1	43662-025031	COCK, KINGSTON	1						N	1

(A=*2006.12)

Remarks
(1)Optional parts

N:Old $\xleftarrow[\text{No}]{\text{Yes}}$ New, Q:Old $\xleftarrow[\text{Yes}]{\text{No}}$ New, R:Old $\xleftarrow[\text{Yes}]{\text{Yes}}$ New, S:Old $\xleftarrow[\text{No}]{\text{No}}$ New, W:Add, Z:Discontinued, F:Interchangeable by set, K:Q'ty Change

Copyright (C) 2014 YANMAR CO., LTD. All RightsReserved.

Fig.20. COOLING FRESH WATER PIPE

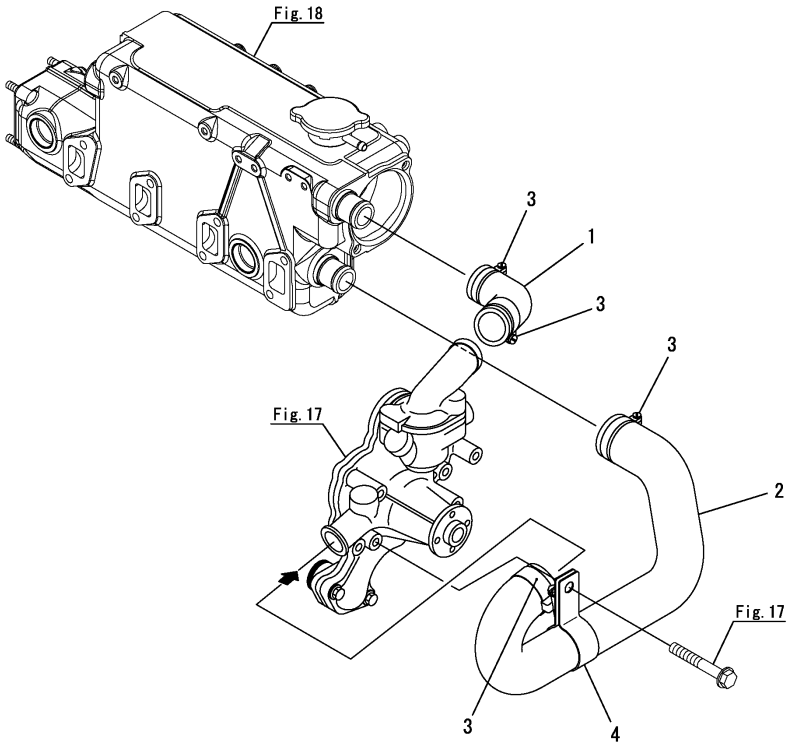

(A)=4JH4AE (D)=
(B)= (E)=
(C)= (F)=

No.	Lev.	Parts No.	Description	Q'ty (A)	(B)	(C)	(D)	(E)	(F)	I	R
1	1	129671-49210	PIPE, WATER	1							
2	1	129671-49220	PIPE, WATER	1							
3	1	129670-49500	CLIP, HOSE 38	4							
4	1	129271-49110	RETAINER, PIPE	1						W	
	(A=*2009.06)										

N:Old ◄Yes/No► New, Q:Old ◄No/Yes► New, R:Old ◄Yes/Yes► New, S:Old ◄No/No► New, W:Add, Z:Discontinued, F:Interchangeable by set, K:Q'ty Change

Copyright (C) 2014 YANMAR CO., LTD. All RightsReserved.

Fig.21. COOLING SEA WATER STRAINER(OPTIONAL)

(A)=4JH4AE (D)=
(B)= (E)=
(C)= (F)=

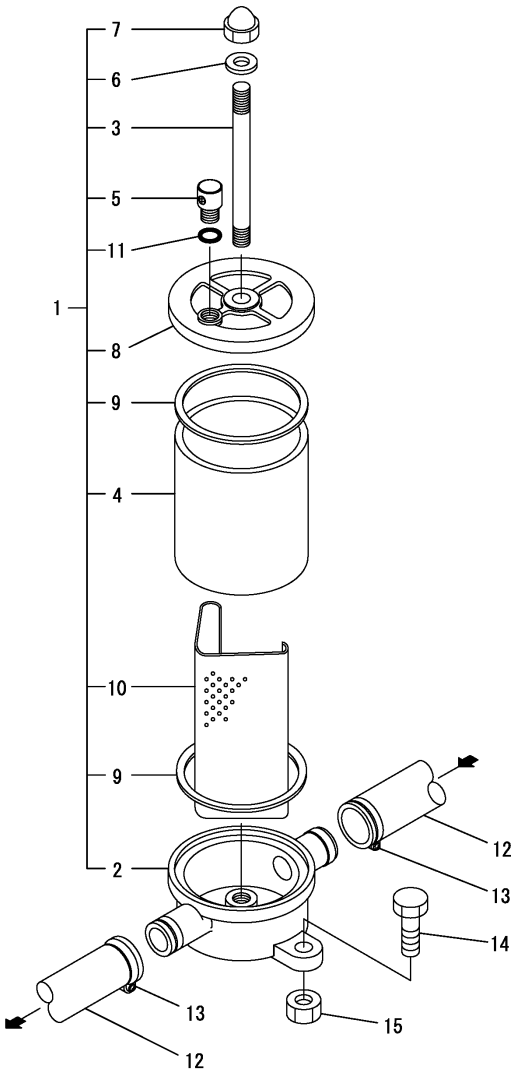

No.	Lev.	Parts No.	Description	Q'ty (A)	(B)	(C)	(D)	(E)	(F)	I	R
1	1	129795-48800	STRAINER	1							
2	2	XTST25S001	BODY	1							
3	2	XTST25S002	BOLT M 8X125	1							
4	2	XTST25S003	PIPE, OUTER	1							
5	2	XTST25S004	PLUG M 8	1							
6	2	XTST25S005	PACKING	1							
7	2	26664-080002	NUT, CAP M8	1							
8	2	XTST25S007	COVER	1							
9	2	XTST25S008	PACKING	2							
10	2	XTST25S009	FILTER	1							
11	2	24311-000060	O-RING, 1AP6.0	1							
12	1	23072-101000	HOSE, 10X1000	1							
13	1	129670-49500	CLIP, HOSE 38	2							
14	1	26116-080302	BOLT, M8X 30 PLATED	2							
15	1	26703-080002	NUT, M8	2							

N:Old $\xleftrightarrow[\text{No}]{\text{Yes}}$ New, Q:Old $\xleftrightarrow[\text{Yes}]{\text{No}}$ New, R:Old $\xleftrightarrow[\text{Yes}]{\text{Yes}}$ New, S:Old $\xleftrightarrow[\text{No}]{\text{No}}$ New, W:Add, Z:Discontinued, F:Interchangeable by set, K:Q'ty Change

Copyright (C) 2014 YANMAR CO., LTD. All RightsReserved.

Fig.22. BILGE PUMP(STD)(OPTIONAL)

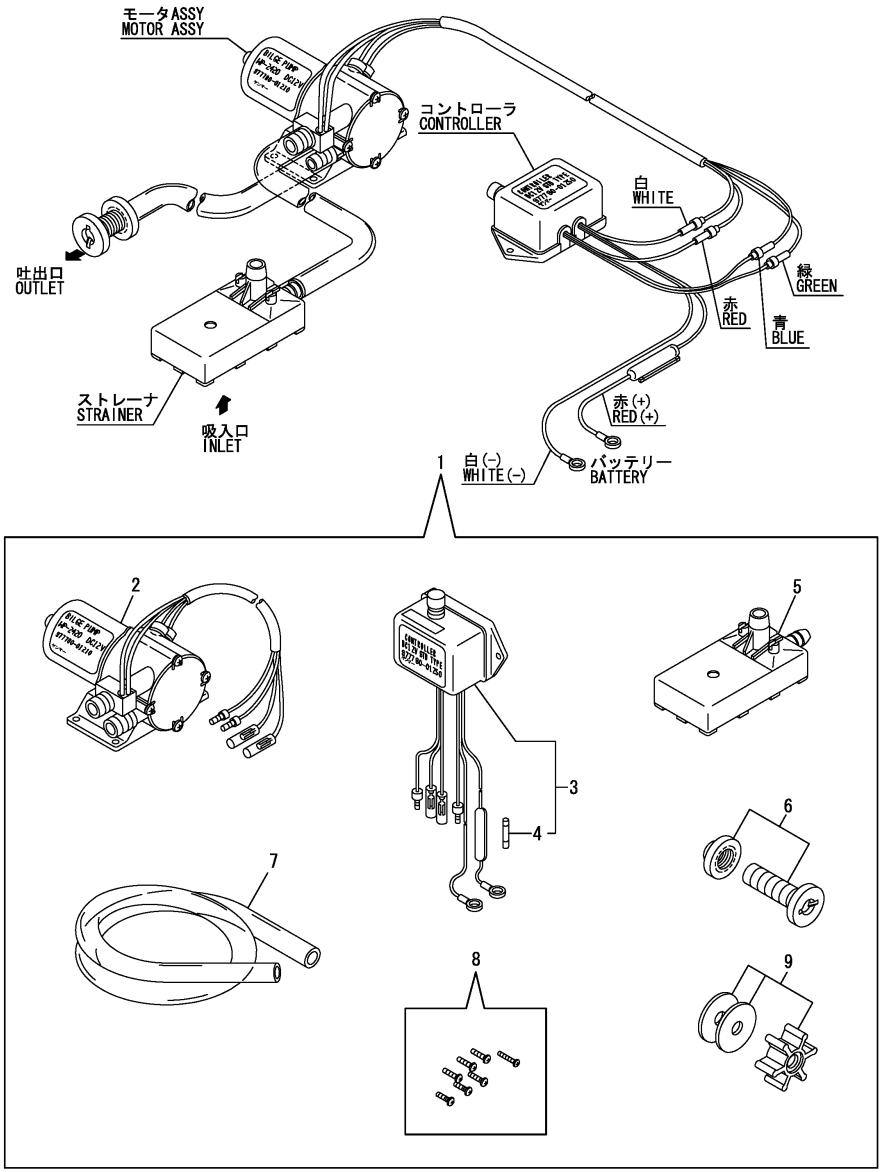

(A)=4JH4AE (D)=
(B)= (E)=
(C)= (F)=

No.	Lev.	Parts No.	Description	Q'ty (A)	(B)	(C)	(D)	(E)	(F)	I	R
1	1	977780-01210	PUMP(12V).BILGE	1							
1-1	1	977780-01211	PUMP ASSY, BILGE	1						N	1
	(A=*1997.01)										
2	2	977780-01230	MOTOR ASSY(BILG PUMP	1							
3	2	977780-01250	CONTROLLER	1							
4	3	X8636008003	FUSE	1							
5	2	X179100021X	STRAINER	1							
6	2	X179100100X	PIPE ASSY	1							
7	2	X0044021509	HOSE A	1							
8	2	X199903800X	SCREW KIT	1							
9	2	977780-03000	INPELLER	1							

Remarks
(1)Inner parts are shown in Fig.46(23A).

N:Old $\xleftarrow[\text{No}]{\text{Yes}}$ New, Q:Old $\xleftarrow[\text{Yes}]{\text{No}}$ New, R:Old $\xleftrightarrow[\text{Yes}]{\text{Yes}}$ New, S:Old $\xleftrightarrow[\text{No}]{\text{No}}$ New, W:Add, Z:Discontinued, F:Interchangeable by set, K:Q'ty Change

Copyright (C) 2014 YANMAR CO., LTD. All RightsReserved.

Fig.23. BILGE PUMP(DX)(OPTIONAL)

(A)=4JH4AE (D)=
(B)= (E)=
(C)= (F)=

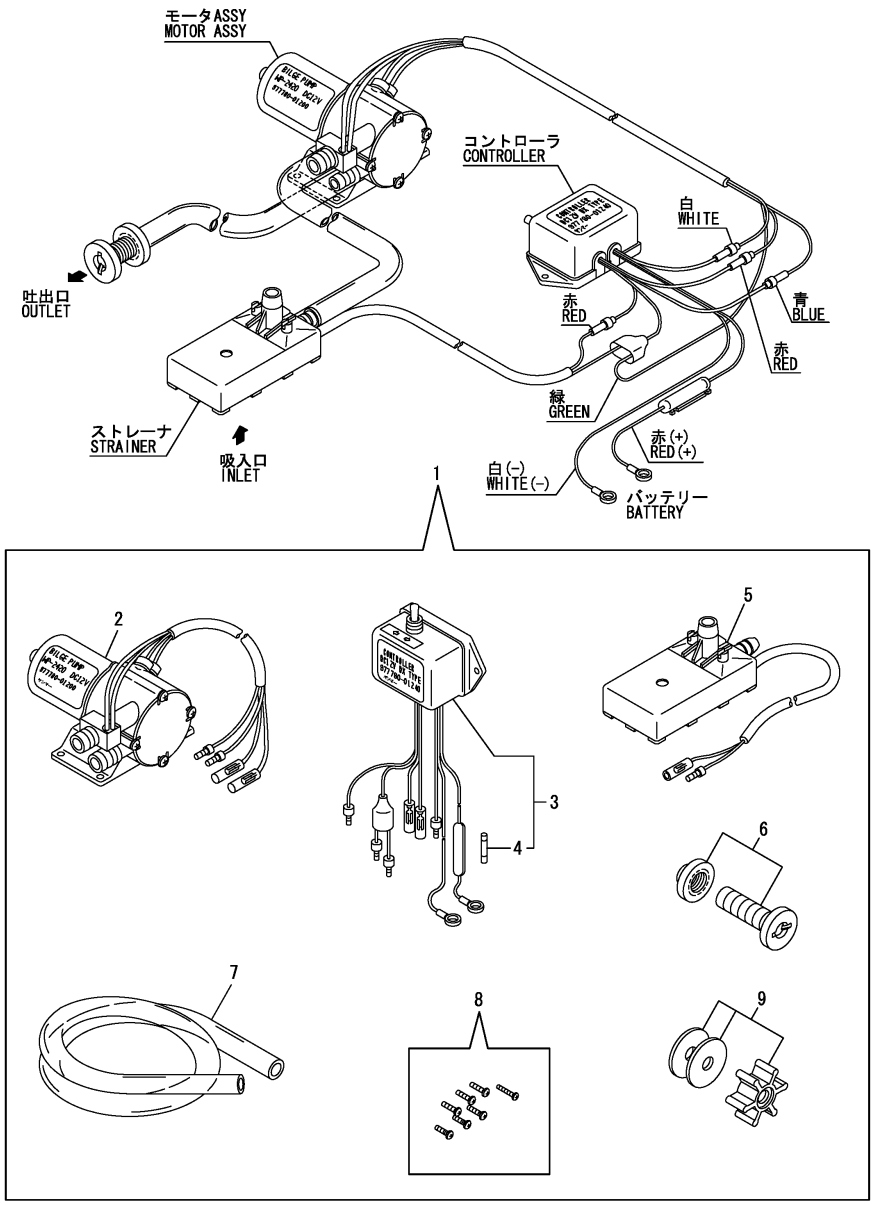

No.	Lev.	Parts No.	Description	Q'ty (A)	(B)	(C)	(D)	(E)	(F)	I	R
1	1	977780-01200	PUMP(12V).BILGE	1							
1-1	1	977780-01211	PUMP ASSY, BILGE	1						N	1
	(A=*1997.01)										
2	2	977780-01230	MOTOR ASSY(BILG PUMP	1							
3	2	977780-01240	CONTROLLER	1							
4	3	X8636008003	FUSE	1							
5	2	X179100011X	STRAINER	1							
6	2	X179100100X	PIPE ASSY	1							
7	2	X0044021509	HOSE A	1							
8	2	X199903800X	SCREW KIT	1							
9	2	977780-03000	INPELLER	1							

Remarks
(1)Inner parts are shown in Fig.46(23A).

N:Old $\xleftarrow[\text{No}]{\text{Yes}}$ New, Q:Old $\xleftarrow[\text{Yes}]{\text{No}}$ New, R:Old $\xleftarrow[\text{Yes}]{\text{Yes}}$ New, S:Old $\xleftarrow[\text{No}]{\text{No}}$ New, W:Add, Z:Discontinued, F:Interchangeable by set, K:Q'ty Change

Copyright (C) 2014 YANMAR CO., LTD. All RightsReserved.

Fig.46. (23A)BILGE PUMP(OPTIONAL)

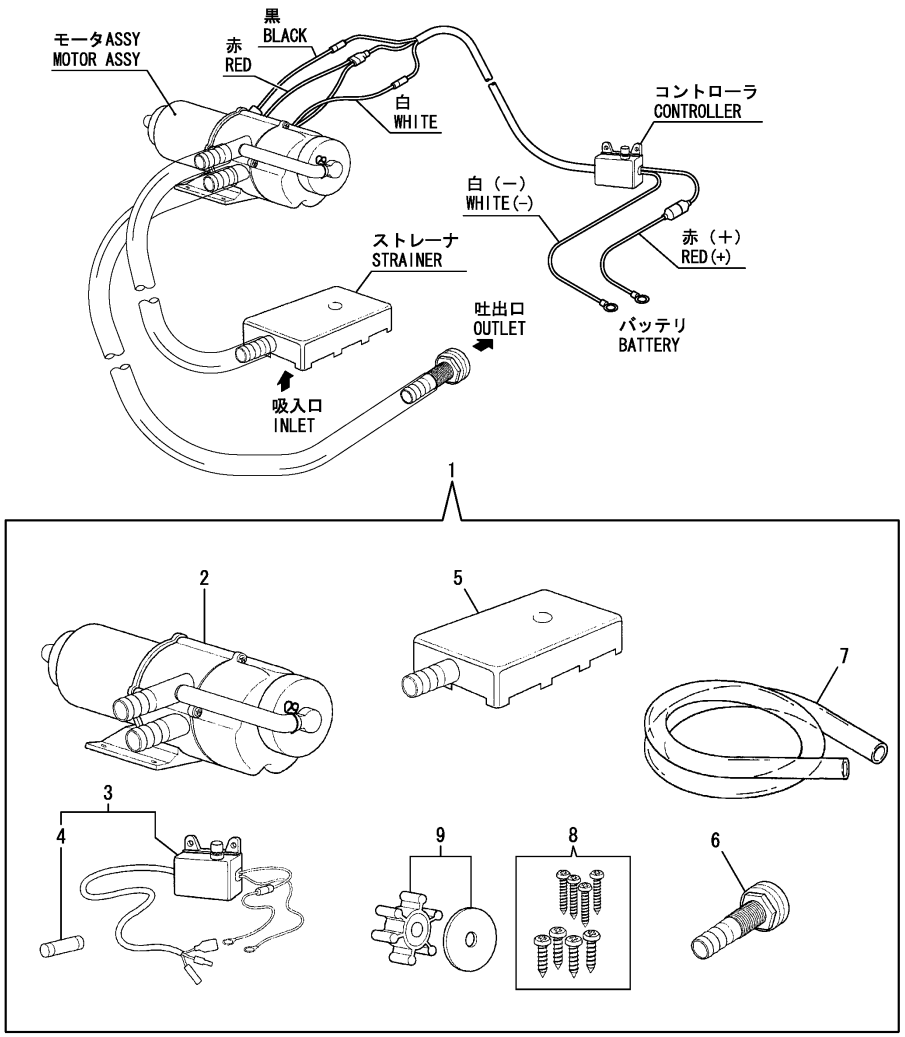

(A)=4JH4AE (D)=
(B)= (E)=
(C)= (F)=

No.	Lev.	Parts No.	Description	Q'ty (A)	(B)	(C)	(D)	(E)	(F)	I	R
1	1	977780-01211	PUMP ASSY, BILGE	1							
2	2	X0318101004	MOTOR ASSY, BILGE	1							
3	2	X158606410X	SWITH	1							
4	3	X8636015001	FUSE	1							
5	2	X179100022X	STRAINER	1							
6	2	X179100100X	PIPE ASSY	1							
7	2	X0044021509	HOSE A	1							
8	2	X199906101X	SCREW SET	1							
9	2	977780-03000	INPELLER	1							

N:Old $\xleftrightarrow[\text{No}]{\text{Yes}}$ New, Q:Old $\xleftrightarrow[\text{Yes}]{\text{No}}$ New, R:Old $\xleftrightarrow[\text{Yes}]{\text{Yes}}$ New, S:Old $\xleftrightarrow[\text{No}]{\text{No}}$ New, W:Add, Z:Discontinued, F:Interchangeable by set, K:Q'ty Change

Copyright (C) 2014 YANMAR CO., LTD. All RightsReserved.

Fig.24. FUEL INJECTION PUMP

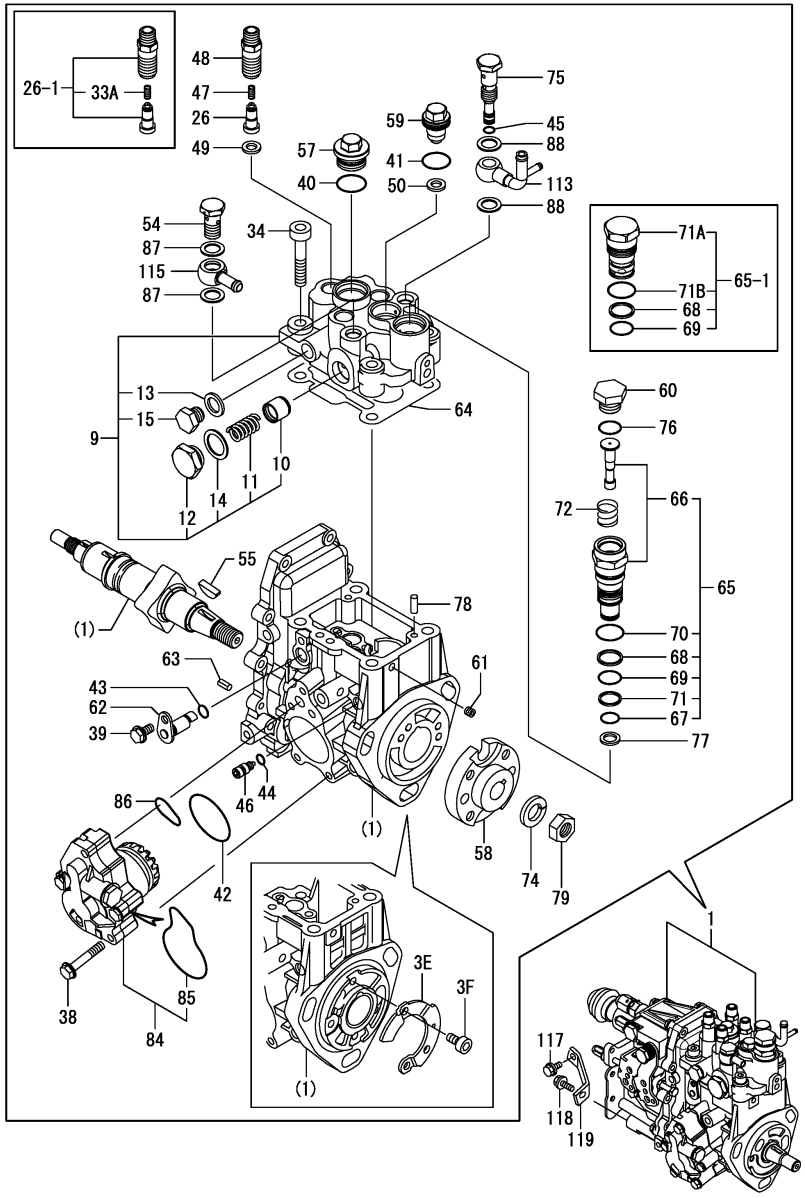

(A)=4JH4AE (D)=
(B)= (E)=
(C)= (F)=

No.	Lev.	Parts No.	Description	Q'ty (A)	(B)	(C)	(D)	(E)	(F)	I	R
1	1	729670-51320	PUMP ASSY, INJECTION	1							1
3E	4	129008-51900	COVER, GEAR CASE	1						W	
	(A=*2009.07)										
3F	4	129008-51920	BOLT, M6X10	2						W	
	(A=*2009.07)										
9	3	158553-51741	HEAD ASSY	1							
10	4	158601-51770	PISTON	1							
11	4	158552-51781	SPRING	1							
12	4	158601-51790	PLUG	1							
13	4	22190-120002	WASHER, SEAL 12	1							
14	4	22190-180002	WASHER, SEAL 18	1							
15	4	23887-120002	PLUG, 12	1							
15-1	4	158553-51930	PLUG, M12	1						R	
	(A=*2008.12)										
26	3	129907-51300	VALVE ASSY, DELIVERY	4							
26-1	3	129009-51390	VALVE ASSY, DELIVERY	4						N	
	(A=E08595)										
33A	4	158563-51330	SPRING, DELIVERY	4						W	
	(A=E08595)										
34	3	26450-080452	BOLT, M8X 45	4							
38	3	158553-51770	BOLT	4							
39	3	26106-060102	BOLT, M6X 10 PLATED	1							
40	3	24356-010200	O-RING, 4D1020	1							
40-1	3	24356-190200	O-RING, 4D19020	1						R	
	(A=*2009.10)										
41	3	24356-010180	O-RING, 4D1018	1							
41-1	3	24356-190180	O-RING, 4D19018	1						R	
	(A=*2009.10)										
42	3	158552-52400	O-RING, 4E S42	1							
43	3	24311-000070	O-RING, 1AP7.0	1							
44	3	158563-51281	O-RING, 4D S6	1							
45	3	158563-51281	O-RING, 4D S6	1							
46	3	158600-51270	STOPPER, TAPPET	1							
47	3	158563-51330	SPRING, DELIVERY	4						Z	
	(A=E08595)										
48	3	158601-51340	HOLDER, DELIVERY	4						Z	
	(A=E08595)										
49	3	158552-51570	GASKET	4							
49-1	3	158552-51571	GASKET	4						R	
	(A=E08767)										
50	3	158552-51570	GASKET	1							
50-1	3	158552-51571	GASKET	1						R	
	(A=E08767)										
54	3	23857-060000	BOLT, JOINT 6	1							
55	3	119802-51090	KEY, 4X16	1							
57	3	158601-51550	PLUG	1							
58	3	158552-51151	FLANGE	1							
59	3	119802-51560	PLUG, BARREL	1							
60	3	129670-51600	PLUG	1						Z	
	(A=*2011.01)										
61	3	158557-51570	PLUG	1							

N:Old $\xleftarrow[\text{No}]{\text{Yes}}$ New, Q:Old $\xleftarrow[\text{Yes}]{\text{No}}$ New, R:Old $\xleftarrow[\text{Yes}]{\text{Yes}}$ New, S:Old $\xleftarrow[\text{No}]{\text{No}}$ New, W:Add, Z:Discontinued, F:Interchangeable by set, K:Q'ty Change

Remarks
(1)Governor(Fig.25) is incorporated in this Fuel Injection Pump(No.1).

++ CONTINUE ++

Copyright (C) 2014 YANMAR CO., LTD. All RightsReserved.

Fig.24. FUEL INJECTION PUMP

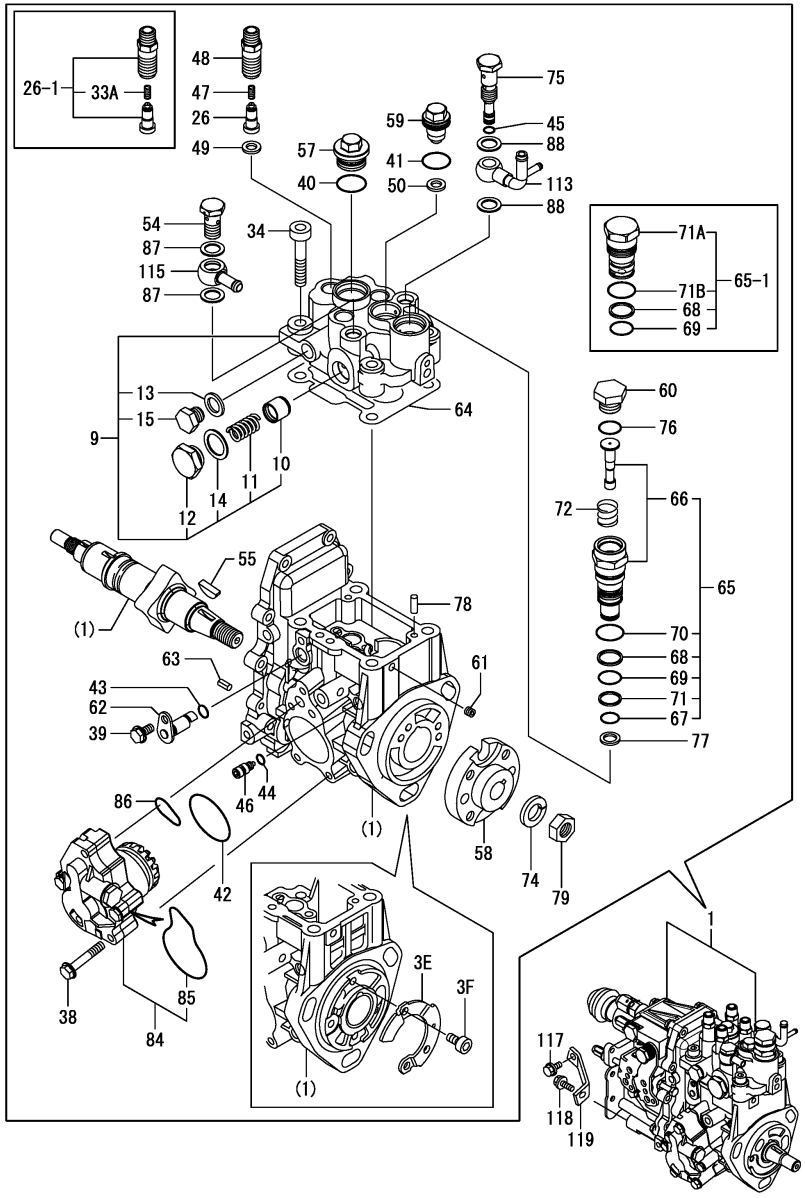

(A)=4JH4AE (D)=
(B)= (E)=
(C)= (F)=

No.	Lev.	Parts No.	Description	Q'ty (A)	(B)	(C)	(D)	(E)	(F)	I	R
62	3	158552-51580	LIFTER	1							
63	3	22351-050010	PIN, SPRING 5.0X10	2							
64	3	158552-51600	GASKET	1							
65	3	119802-51590	TIMER SET	1							
65-1	3	129271-51590	PLUG SET,TIMER	1						N	
	(A=*2011.01)										
66	4	119802-51600	TIMER ASSY	1						Z	
	(A=*2011.01)										
67	4	158553-51670	O-RING, 1011	1						Z	
	(A=*2011.01)										
68	4	119802-51680	RING, BACK UP	1							
69	4	119802-51690	O-RING	1							
70	4	24356-010200	O-RING, 4D1020	1						Z	
	(A=*2011.01)										
71	4	24372-000150	RING, BACK UP T2P15	1						Z	
	(A=*2011.01)										
71A	4	129271-51600	PLUG,TIMER	1						W	
	(A=*2011.01)										
71B	4	24356-190200	O-RING, 4D19020	1						W	
	(A=*2011.01)										
72	3	158553-51630	SPRING, TIMER	1						Z	
	(A=*2011.01)										
74	3	22217-140000	WASHER, SPRING 14	1							
75	3	158601-51650	JOINT, OVER FLOW	1							
76	3	158553-51660	O-RING, P14	1						Z	
	(A=*2011.01)										
77	3	158553-51680	GASKET	1							
78	3	22312-050140	PIN, PARALLEL 5X14	2							
79	3	26776-140002	NUT, LOCK M14	1							
84	3	158552-52100	PUMP ASSY, FUEL FEED	1							
85	4	158552-52500	O-RING	1							
86	3	158552-52310	O-RING	1							
86-1	3	158552-52311	O-RING	1						R	
	(A=*2009.08)										
87	3	22190-120002	WASHER, SEAL 12	2							
88	3	22190-120002	WASHER, SEAL 12	2							
113	2	158552-51670	JOINT, OVER FLOW	1							
115	2	129916-59020	JOINT, PIPE 12	1							
117	1	26106-080162	BOLT, M8X 16 PLATED	1							
118	1	26106-080202	BOLT, M8X 20 PLATED	1							
119	1	129601-51250	RETAINER, PUMP	1							

Remarks
(1)Governor(Fig.25) is incorporated in this Fuel Injection Pump(No.1).

N:Old ←Yes/No→ New, Q:Old ←No/Yes→ New, R:Old ←Yes/Yes→ New, S:Old ←No/No→ New, W:Add, Z:Discontinued, F:Interchangeable by set, K:Q'ty Change

Copyright (C) 2014 YANMAR CO., LTD. All RightsReserved.

Fig.25. GOVERNOR

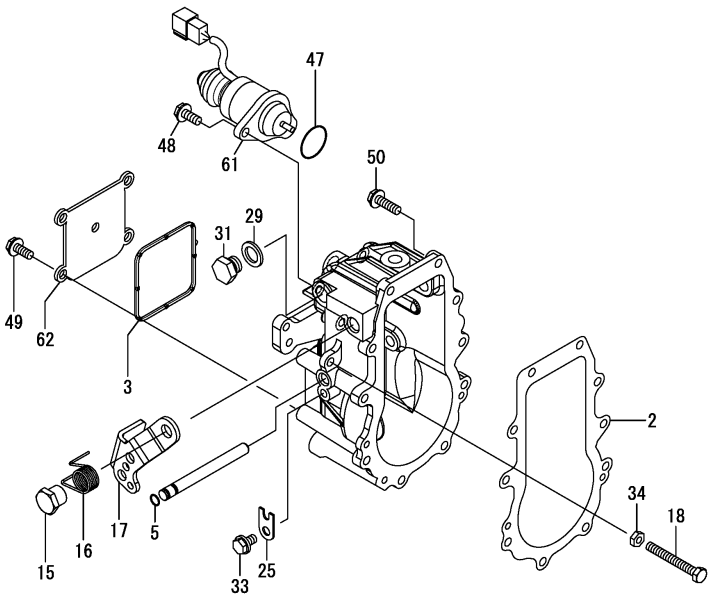

(A)=4JH4AE (D)=
(B)= (E)=
(C)= (F)=

No.	Lev.	Parts No.	Description	Q'ty (A)	(B)	(C)	(D)	(E)	(F)	I	R
2	3	158553-61050	GASKET	1							
3	3	158553-61070	GASKET	1							
5	4	129155-51280	O-RING, S6	1							
15	4	129255-61410	NUT, LOCK	1							
16	4	119807-61420	SPRING, RETURN	1							
17	4	158552-61441	LEVER, REGULATOR	1							
18	4	129155-61460	BOLT, IDLE	1							
25	4	119660-61901	RETAINER, SHAFT	1							
29	4	22190-120002	WASHER, SEAL 12	1							
31	4	23887-120002	PLUG, 12	1							
31-1	4	158553-51930	PLUG, M12	1						R	
	(A=*2008.12)										
33	4	26106-060102	BOLT, M6X 10 PLATED	1							
34	4	26756-060002	NUT, LOCK M6	1							
47	3	158552-61900	O-RING	1							
48	3	26106-060142	BOLT, M6X 14 PLATED	2							
49	3	26106-060142	BOLT, M6X 14 PLATED	4							
50	3	26106-060202	BOLT, M6X 20 PLATED	10							
61	2	129271-77950	SOLENOID, STOP	1							
62	2	129642-61060	COVER, GOVERNOR CASE	1							

Remarks
* This figure(Governor) is incorporated in the Fuel Injection Pump(Fig.24).

N:Old ◄Yes/No► New, Q:Old ◄No/Yes► New, R:Old ◄Yes/Yes► New, S:Old ◄No/No► New, W:Add, Z:Discontinued, F:Interchangeable by set, K:Q'ty Change

Copyright (C) 2014 YANMAR CO., LTD. All RightsReserved.

Fig.26. FUEL FEED PUMP

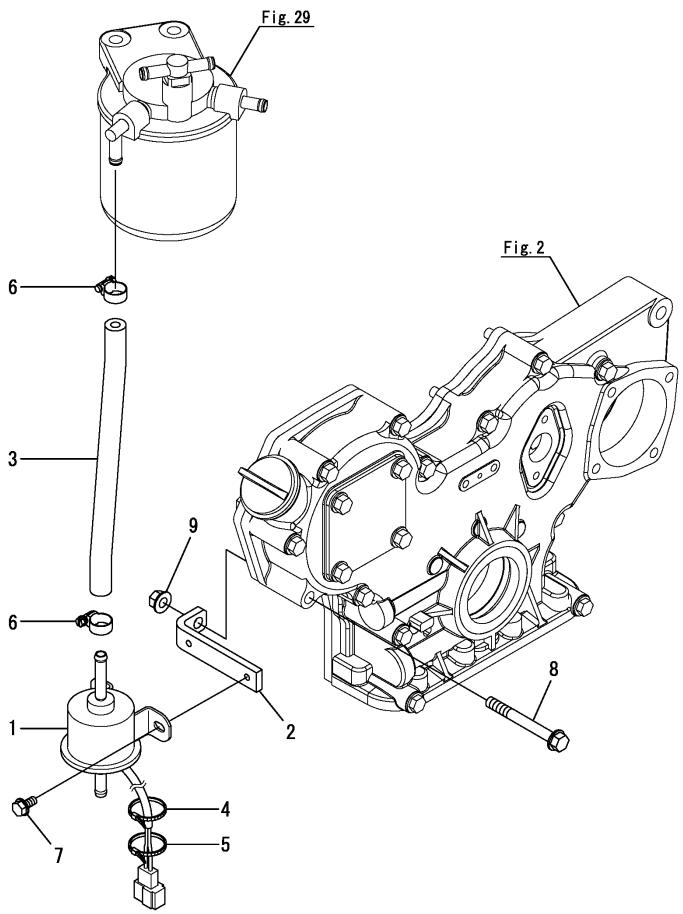

(A)=4JH4AE (D)=
(B)= (E)=
(C)= (F)=

No.	Lev.	Parts No.	Description	Q'ty (A)	(B)	(C)	(D)	(E)	(F)	I	R
1	1	119225-52102	PUMP ASSY, FUEL FEED	1							
2	1	129670-55010	BRACKET, PUMP	1							
3	1	129670-59110	PIPE, FUEL	1							
4	1	128990-59890	BAND,200	1							
5	1	128990-59890	BAND,200	1							
6	1	23000-013000	CLAMP, 13	2							
7	1	26106-060122	BOLT, M6X 12 PLATED	2							
8	1	26106-080702	BOLT, M8X 70 PLATED	1							
9	1	26366-080002	NUT, M8	1							

N:Old $\overset{\text{Yes}}{\underset{\text{No}}{\leftrightarrows}}$ New, Q:Old $\overset{\text{No}}{\underset{\text{Yes}}{\leftrightarrows}}$ New, R:Old $\overset{\text{Yes}}{\underset{\text{Yes}}{\leftrightarrows}}$ New, S:Old $\overset{\text{No}}{\underset{\text{No}}{\leftrightarrows}}$ New, W:Add, Z:Discontinued, F:Interchangeable by set, K:Q'ty Change

Copyright (C) 2014 YANMAR CO., LTD. All RightsReserved.

Fig.27. FUEL INJECTION VALVE

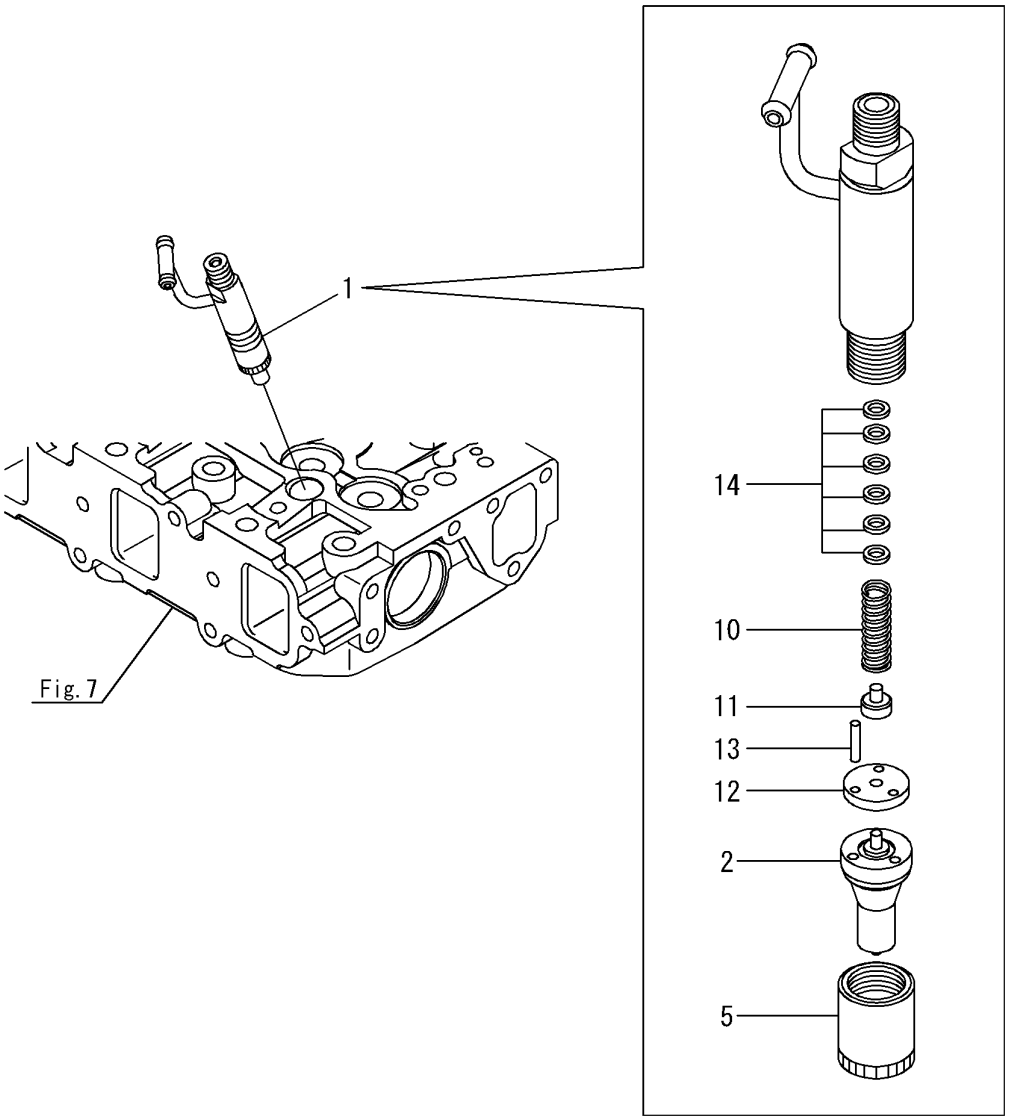

(A)=4JH4AE (D)=
(B)= (E)=
(C)= (F)=

No.	Lev.	Parts No.	Description	Q'ty (A)	(B)	(C)	(D)	(E)	(F)	I	R
1	1	729008-53100	VALVE ASSY,INJECTION	4							
2	2	129008-53000	VALVE ASSY,INJECTION	4							
5	2	114250-53080	NUT, NOZZLE D16.95	4							
10	2	114250-53120	SPRING, NOZZLE	4							
11	2	114250-53130	SEAT, SPRING	4							
12	2	114250-53140	PLATE	4							
13	2	114250-53210	PIN	8							
14	2	114250-53400	SHIM SET	4							
14-1	2	119803-53400	SHIM SET	4						R	

(A=E07860)

N:Old $\xleftrightarrow[\text{No}]{\text{Yes}}$ New, Q:Old $\xleftrightarrow[\text{Yes}]{\text{No}}$ New, R:Old $\xleftrightarrow[\text{Yes}]{\text{Yes}}$ New, S:Old $\xleftrightarrow[\text{No}]{\text{No}}$ New, W:Add, Z:Discontinued, F:Interchangeable by set, K:Q'ty Change

Copyright (C) 2014 YANMAR CO., LTD. All RightsReserved.

Fig.28. FUEL INJECTION PIPE

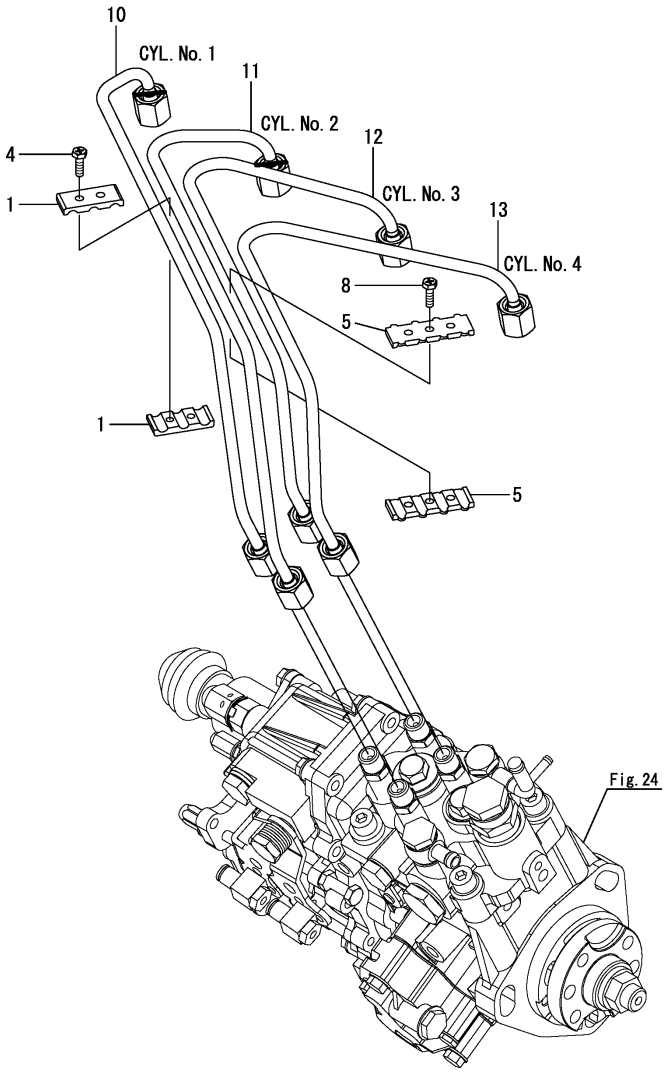

(A)=4JH4AE (D)=
(B)= (E)=
(C)= (F)=

No.	Lev.	Parts No.	Description	Q'ty (A)	(B)	(C)	(D)	(E)	(F)	I	R
1	1	129150-59120	RETAINER, PIPE	1							
4	2	129150-59131	BOLT, M4X14	2							
5	1	129550-59120	RETAINER, PIPE	1							
8	2	129150-59131	BOLT, M4X14	2							
10	1	129670-59710	PIPE ASSY, INJECTION	1							
11	1	129670-59720	PIPE ASSY, INJECTION	1							
12	1	129670-59730	PIPE ASSY, INJECTION	1							
13	1	129670-59740	PIPE ASSY, INJECTION	1							

N:Old $\frac{\text{Yes}}{\text{No}}$ New, Q:Old $\frac{\text{No}}{\text{Yes}}$ New, R:Old $\frac{\text{Yes}}{\text{Yes}}$ New, S:Old $\frac{\text{No}}{\text{No}}$ New, W:Add, Z:Discontinued, F:Interchangeable by set, K:Q'ty Change

Copyright (C) 2014 YANMAR CO., LTD. All RightsReserved.

Fig.29. FUEL PIPE & FUEL STRAINER

(A)=4JH4AE (D)=
(B)= (E)=
(C)= (F)=

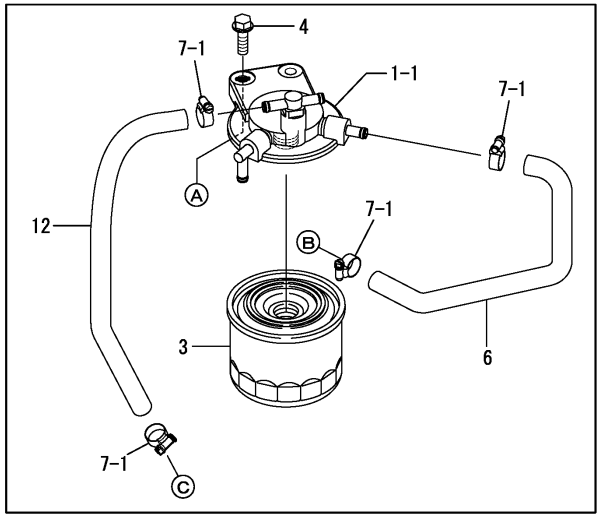

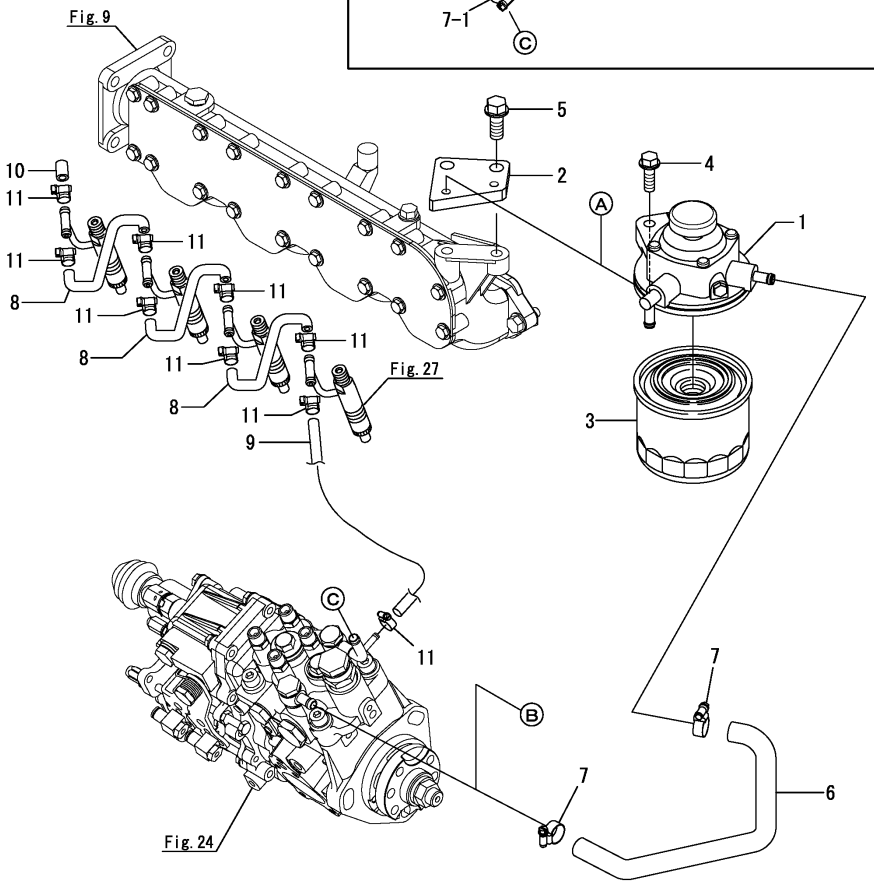

No.	Lev.	Parts No.	Description	Q'ty (A)	(B)	(C)	(D)	(E)	(F)	I	R
1	1	119802-55610	BRACKET, FILTER	1							
1-1	1	129004-55612	BRACKET, FILTER	1						S	
	(A=*2008.10)										
2	1	129670-55670	BRACKET, FILTER	1							
3	1	119802-55810	FILTER,FO	1							
4	1	26106-080252	BOLT, M8X 25 PLATED	2							
5	1	26106-100252	BOLT, M10X 25 PLATED	2							
6	1	129670-59150	PIPE, FUEL	1							
7	1	23000-016000	CLAMP, 16	2							
7-1	1	23000-016000	CLAMP, 16	4						K	
	(A=*2008.10)										
8	1	129270-59550	PIPE, FUEL	3							
9	1	129495-59563	PIPE, FUEL	1							
10	1	129270-59580	CAP	1							
11	1	23000-013000	CLAMP, 13	9							
12	1	129670-59140	PIPE, FUEL OIL	1						W	
	(A=*2008.10)										

N:Old $\xleftarrow[\text{No}]{\text{Yes}}$ New, Q:Old $\xleftarrow[\text{Yes}]{\text{No}}$ New, R:Old $\xleftarrow[\text{Yes}]{\text{Yes}}$ New, S:Old $\xleftarrow[\text{No}]{\text{No}}$ New, W:Add, Z:Discontinued, F:Interchangeable by set, K:Q'ty Change

Copyright (C) 2014 YANMAR CO., LTD. All RightsReserved.

Fig.30. OIL/WATER SEPARATER

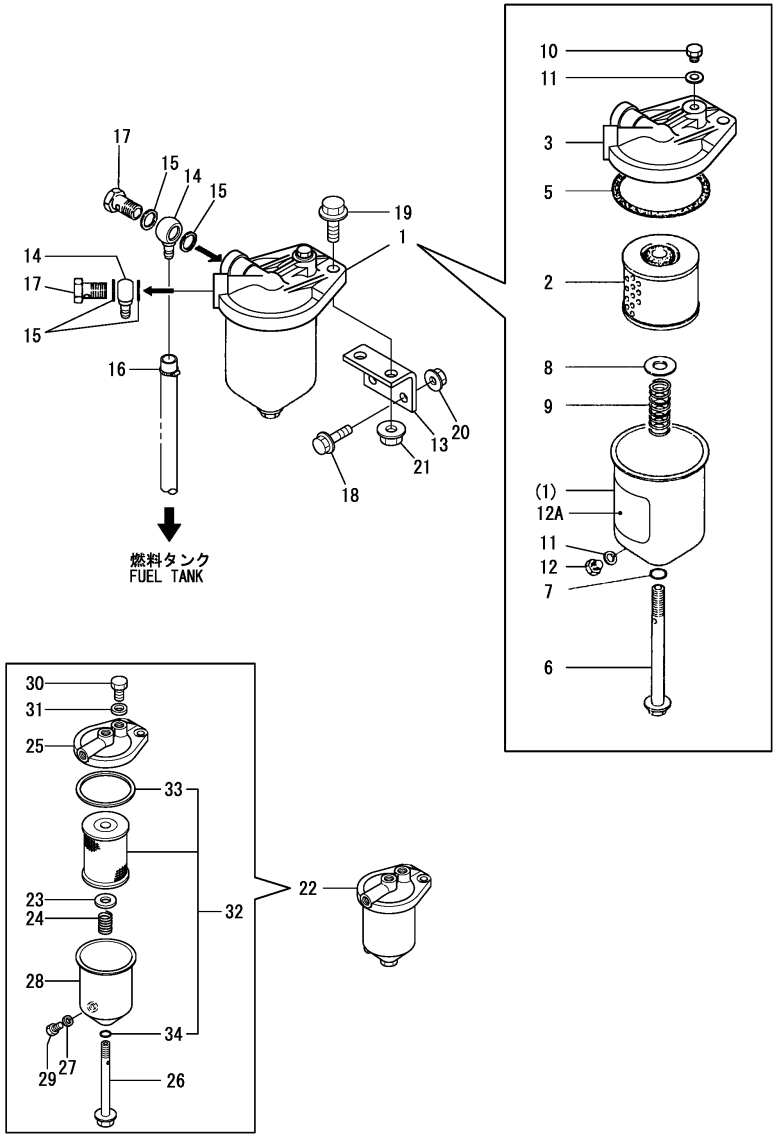

(A)=4JH4AE (D)=
(B)= (E)=
(C)= (F)=

No.	Lev.	Parts No.	Description	Q'ty (A)	(B)	(C)	(D)	(E)	(F)	I	R
1	1	120324-55750	SEPARATOR ASSY	1							
1-1	1	120324-55751	SEPARATOR ASSY	1						N	
	(A=*2008.04)										
1-2	1	120324-55751	SEPARATOR ASSY	1						Z	1
	(A=*2011.08)										
2	2	120324-55760	ELEMENT	1							
3	2	X2740134001	COVER ASSY	1						Z	
	(A=*2008.04)										
3-1	2	X2740134002	COVER ASSY	1						W	
	(A=*2008.04)										
5	2	X0582810173	GASKET	1							
6	2	X0311121522	BOLT	1							
7	2	X0580121073	O-RING, 1A P 12.0	1							
8	2	X0300120414	SEAT, SPRING	1							
9	2	X0600160122	SPRING	1							
10	2	X0314080110	PLUG	1							
11	2	X0588080273	WASHER	2							
12	2	X0313080110	BOLT	1						Z	
	(A=*2008.04)										
12-1	2	X0313080922	BOLT	1						W	
	(A=*2008.04)										
12A	2	X0993070671	LABEL	1						Z	
	(A=*2008.04)										
12A-1	2	X0993071171	LABEL, CAUTION	1						W	
	(A=*2008.04)										
13	1	129670-55810	BRACKET	1							
14	1	121750-59910	JOINT	2							
15	1	22190-140002	WASHER, SEAL 14	4							
16	1	23000-013000	CLAMP, 13	2							
17	1	23857-080000	BOLT, JOINT 8	2							
18	1	26106-080302	BOLT, M8X 30 PLATED	2							
19	1	26106-100302	BOLT, M10X 30 PLATED	2							
20	1	26366-080002	NUT, M8	2							
21	1	26366-100002	NUT, M10	2							
22	1	129670-55750	SEPARATOR ASSY	1						W	
	(A=*2011.08)										
23	2	123325-35160	WASHER	1							
24	2	123325-35170	SPRING	1							
25	2	129495-55610	BODY, STRAINER	1							
26	2	129495-55620	BOLT	1							
27	2	123672-55760	GASKET	1							
28	2	129065-55760	CASE	1							
29	2	129065-55770	PLUG, DRAIN M8	1							
30	2	129065-55800	PLUG, M14	1							
31	2	123678-55890	GASKET	1							
32	2	41650-502320	ELEMENT ASSY(D72XL90	1							
33	3	123325-35140	GASKET	1							
34	3	24311-000120	O-RING, 1AP12.0	1							

Remarks
(1)Interchangeability is <N> with No.22.

N:Old $\xleftrightarrow[\text{No}]{\text{Yes}}$ New, Q:Old $\xleftrightarrow[\text{Yes}]{\text{No}}$ New, R:Old $\xleftrightarrow[\text{Yes}]{\text{Yes}}$ New, S:Old $\xleftrightarrow[\text{No}]{\text{No}}$ New, W:Add, Z:Discontinued, F:Interchangeable by set, K:Q'ty Change

Copyright (C) 2014 YANMAR CO., LTD. All RightsReserved.

Fig.31. FUEL TANK(OPTIONAL)

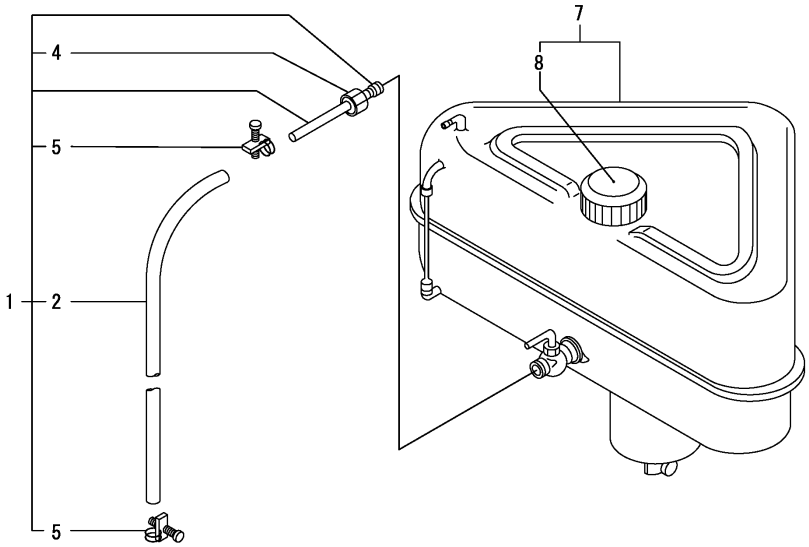

(A)=4JH4AE (D)=
(B)= (E)=
(C)= (F)=

No.	Lev.	Parts No.	Description	Q'ty (A)	(B)	(C)	(D)	(E)	(F)	I	R
1	1	128990-59700	PIPE ASSY, FUEL	1							
2	2	128990-59131	PIPE, FUEL	1							
4	2	138603-59380	CAP NUT	1							
5	2	23010-014000	CLAMP, 14	2							
7	1	83213-003012	TANK ASSY, FUEL OIL	1							
8	2	105430-55041	CAP ASSY	1							

N:Old $\overset{\text{Yes}}{\underset{\text{No}}{\leftrightarrows}}$ New, Q:Old $\overset{\text{No}}{\underset{\text{Yes}}{\leftrightarrows}}$ New, R:Old $\overset{\text{Yes}}{\underset{\text{Yes}}{\leftrightarrows}}$ New, S:Old $\overset{\text{No}}{\underset{\text{No}}{\leftrightarrows}}$ New, W:Add, Z:Discontinued, F:Interchangeable by set, K:Q'ty Change

Copyright (C) 2014 YANMAR CO., LTD. All RightsReserved.

Fig.32. CABLE SUPPORT

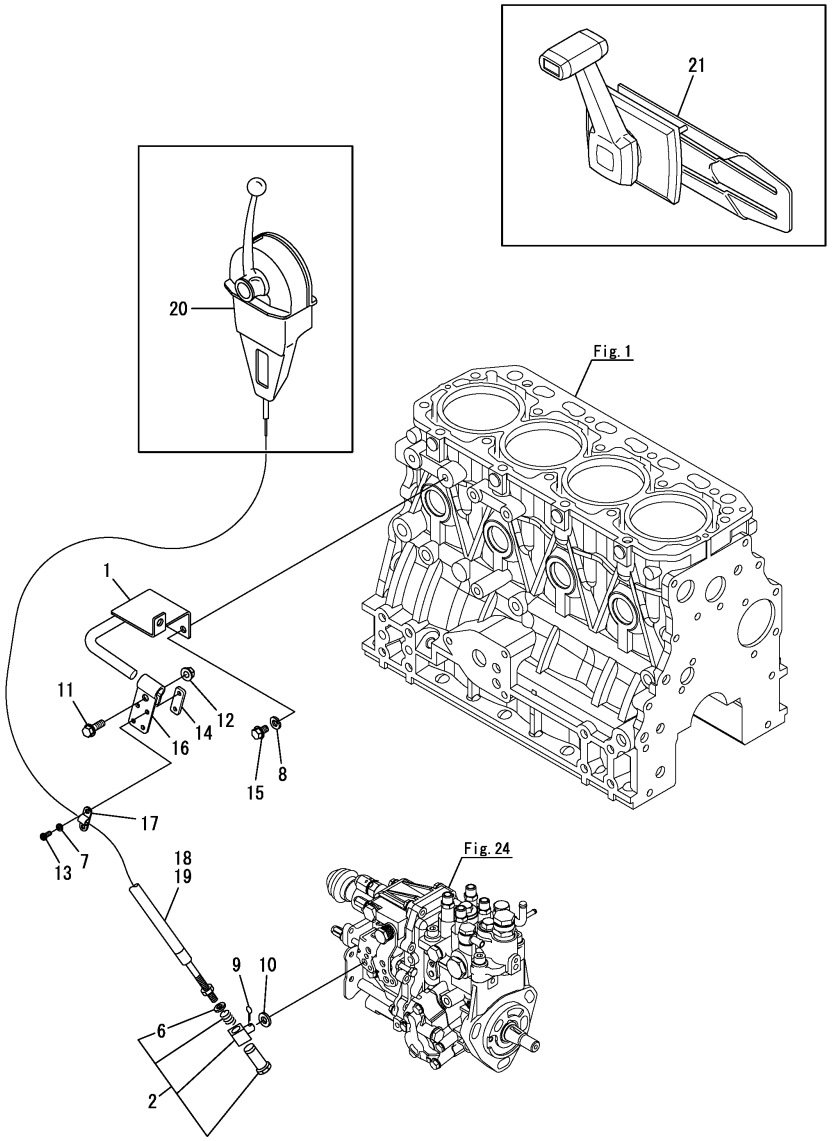

(A)=4JH4AE (D)=
(B)= (E)=
(C)= (F)=

No.	Lev.	Parts No.	Description	Q'ty (A)	(B)	(C)	(D)	(E)	(F)	I	R
1	1	129670-67120	BRACKET, GOVERNOR	1							
2	1	129470-67200	RETAINER ASSY	1							
6	2	22242-000100	RING, 10	1							
7	1	22217-050000	WASHER, SPRING 5	2							
8	1	22217-080000	WASHER, SPRING 8	2							
9	1	22414-250150	PIN, COTTER 2.5X15	1							
10	1	23414-080000	GASKET, 8X1.0	1							
11	1	26106-080252	BOLT, M8X 25 PLATED	1							
12	1	26366-080002	NUT, M8	1							
13	1	26557-050202	SCREW, M5X20	2							
14	1	121574-86320	RETAINER	1							
15	1	26106-080122	BOLT, M8X 12 PLATED	2							
16	1	129670-67110	BRACKET	1							
17	1	41710-000410	CLAMP	1							
18	1	41710-000380	CABLE L=4000	2							1
18-1	1	27730-301400	CABLE (L=4000)	2						R	1
	(A=*2012.07)										
19	1	129470-86500	CABLE, L=7000	2							1
20	1	41730-000681	MT-3 REMO-CON	1							1
21	1	128170-86501	REMOCON HEAD (MN	1							1

Remarks
(1)Optional parts

N:Old $\frac{\text{Yes}}{\text{No}}$ New, Q:Old $\frac{\text{No}}{\text{Yes}}$ New, R:Old $\frac{\text{Yes}}{\text{Yes}}$ New, S:Old $\frac{\text{No}}{\text{No}}$ New, W:Add, Z:Discontinued, F:Interchangeable by set, K:Q'ty Change

Copyright (C) 2014 YANMAR CO., LTD. All RightsReserved.

Fig.33. CLUTCH

(A)=4JH4AE
(B)=
(C)=
(D)=
(E)=
(F)=

No.	Lev.	Parts No.	Description	Q'ty (A)	(B)	(C)	(D)	(E)	(F)	I	R
1	1	129270-81110	CLUTCH ASSY, 2.36	1							
2	1	129270-81120	CLUTCH ASSY, I=2.61	1							
3	1	129270-81210	CLUTCH ASSY, 2.36	1							1
4	1	129270-81220	CLUTCH ASSY, I=2.61	1							1
5	1	129670-81200	CLUTCH ASSY, 2.33	1							
6	1	129670-81210	CLUTCH ASSY, I=2.64	1							
7	1	129670-81220	CLUTCH ASSY, 2.33	1							1
8	1	129670-81230	CLUTCH ASSY, I=2.64	1							1
9	1	129670-81040	CLUTCH ASSY, 1.47	1							
10	1	129670-81050	CLUTCH ASSY, 2.14	1							
11	1	129670-81060	CLUTCH ASSY, I=2.63	1							
12	1	129670-81100	CLUTCH ASSY, 2.15	1							
13	1	129670-81110	CLUTCH ASSY, I=2.7	1							
14	1	129670-13600	STUD	2							
15	1	26106-080202	BOLT, M8X 20 PLATED	6							
16	1	26366-080002	NUT, M8	2							
17	1	129670-77800	CLUTCH ASSY	1						W	
	(A=*2007.01)										
18	1	129670-77810	CLUTCH ASSY	1						W	
	(A=*2007.01)										
19	1	129670-77820	CLUTCH ASSY	1						W	
	(A=*2007.01)										
20	1	129670-77830	CLUTCH ASSY	1						W	
	(A=*2007.01)										

Remarks
* This figure are not illustrated.
(1)With Safety Switch Stay : Optional parts

N:Old $\xleftrightarrow[\text{No}]{\text{Yes}}$ New, Q:Old $\xleftrightarrow[\text{Yes}]{\text{No}}$ New, R:Old $\xleftrightarrow[\text{Yes}]{\text{Yes}}$ New, S:Old $\xleftrightarrow[\text{No}]{\text{No}}$ New, W:Add, Z:Discontinued, F:Interchangeable by set, K:Q'ty Change

Copyright (C) 2014 YANMAR CO., LTD. All RightsReserved.

Fig.34. COUPLING(OPTIONAL)

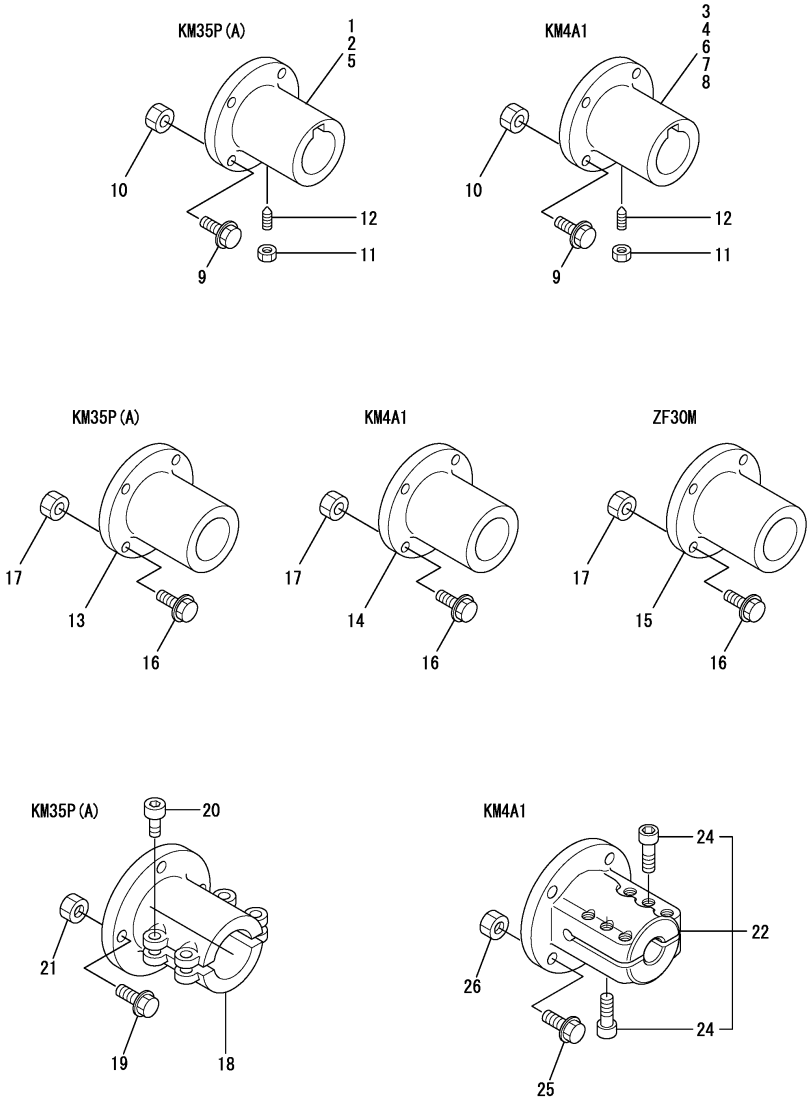

Remarks
(1)Taper type
(2)Straight type
(3)Slit type.

(A)=4JH4AE (D)=
(B)= (E)=
(C)= (F)=

No.	Lev.	Parts No.	Description	Q'ty (A)	(B)	(C)	(D)	(E)	(F)	I	R
1	1	129171-85900	COUPLING, TAPER 32	1							1
2	1	129670-85900	COUPLING, TAPER 34	1							1
3	1	129473-85900	COUPLING, TAPER 38	1							1
4	1	48110-028071	COUPLING, TAPER 28	1							1
5	1	48110-032502	COUPLING, 30	1							1
6	1	48110-030061	COUPLING, D29.5	1							1
7	1	48110-032065	COUPLING, TAPER 32	1							1
8	1	48110-034071	COUPLING, TAPER 34	1							1
9	1	26106-100322	BOLT, M10X 32 PLATED	4							
10	1	26706-100002	NUT, M10	4							
11	1	26756-080002	NUT, LOCK M8	1							
12	1	48110-032411	SCREW	1							
13	1	105583-85900	COUPLING, 22	1							2
14	1	129470-85900	COUPLING	1							2
15	1	129673-85100	CUPLING STRAIGHT ZF	1							2
16	1	26106-100322	BOLT, M10X 32 PLATED	4							
17	1	26706-100002	NUT, M10	4							
18	1	104214-83980	COUPLING	1							3
19	1	26106-100322	BOLT, M10X 32 PLATED	4							
20	1	26450-080282	BOLT, M8X 28	4							
20-1	1	26450-080302	BOLT, M8X 30	4						R	
	(A=*2008.01)										
21	1	26706-100002	NUT, M10	4							
22	1	129470-83750	COUPLING ASSY	1							3
24	2	26450-120402	BOLT, M12X 40	6							
25	1	26106-100322	BOLT, M10X 32 PLATED	4							
26	1	26706-100002	NUT, M10	4							

N:Old $\xleftrightarrow[\text{No}]{\text{Yes}}$ New, Q:Old $\xleftrightarrow[\text{Yes}]{\text{No}}$ New, R:Old $\xleftrightarrow[\text{Yes}]{\text{Yes}}$ New, S:Old $\xleftrightarrow[\text{No}]{\text{No}}$ New, W:Add, Z:Discontinued, F:Interchangeable by set, K:Q'ty Change

Copyright (C) 2014 YANMAR CO., LTD. All RightsReserved.

Fig.35. STARTING MOTOR

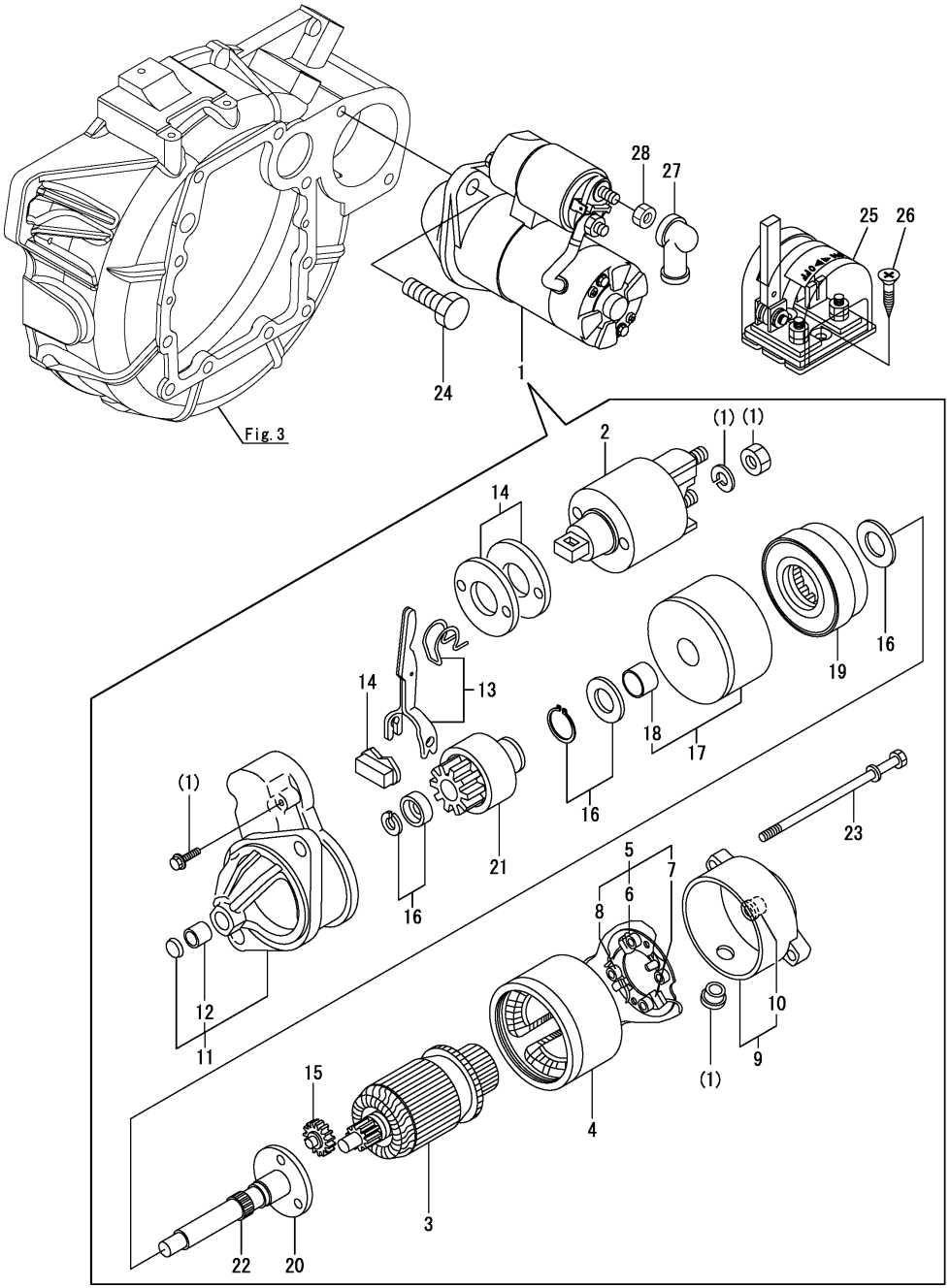

(A)=4JH4AE (D)=
(B)= (E)=
(C)= (F)=

No.	Lev.	Parts No.	Description	Q'ty (A)	(B)	(C)	(D)	(E)	(F)	I	R
1	1	129608-77010	STARTER, S114-817A	1							
2	2	129698-77020	SWITCH ASSY	1							
3	2	129698-77101	ARMATURE ASSY	1							
4	2	129608-77110	YOKE ASSY	1							
5	2	129698-77120	HOLDER ASSY, BRUSH	1							
6	3	129698-77140	BRUSH SET	1							
7	3	129698-77130	BRUSH	2							
8	3	129698-77150	SPRING, BRUSH	4							
9	2	129698-77161	COVER ASSY	1							
10	3	129698-77170	BEARING	1							
11	2	129698-77260	CASE ASSY	1							
12	3	X2114535200	METAL, STARTER	1							
13	2	129698-77270	LEVER SET, SHIFT	1							
14	2	129698-77280	COVER KIT	1							
15	2	129698-77240	GEAR	3							
16	2	129698-77250	WASHER SET	1							
17	2	129698-77180	BRACKET	1							
18	3	129698-77190	BRACKET	1							
19	2	129698-77200	GEAR, INTERNAL	1							
20	2	129698-77210	BRACKET	1							
21	2	129698-77220	PINION ASSY	1							
22	2	129698-77230	SHAFT	1							
23	2	124195-77770	BOLT, THROUGH	2							
24	1	26116-120302	BOLT, M12X 30 PLATED	2							
25	1	123310-77640	SWITCH, BATTERY	1							
26	1	22724-800380	SCREW, 8.0X38	2							
27	1	129670-77030	COVER, TERMINAL	1							
28	1	26756-080002	NUT, LOCK M8	1							

N:Old $\overset{\text{Yes}}{\underset{\text{No}}{\leftrightarrow}}$ New, Q:Old $\overset{\text{No}}{\underset{\text{Yes}}{\leftrightarrow}}$ New, R:Old $\overset{\text{Yes}}{\underset{\text{Yes}}{\leftrightarrow}}$ New, S:Old $\overset{\text{No}}{\underset{\text{No}}{\leftrightarrow}}$ New, W:Add, Z:Discontinued, F:Interchangeable by set, K:Q'ty Change

Copyright (C) 2014 YANMAR CO., LTD. All RightsReserved.

Fig.36. GENERATOR

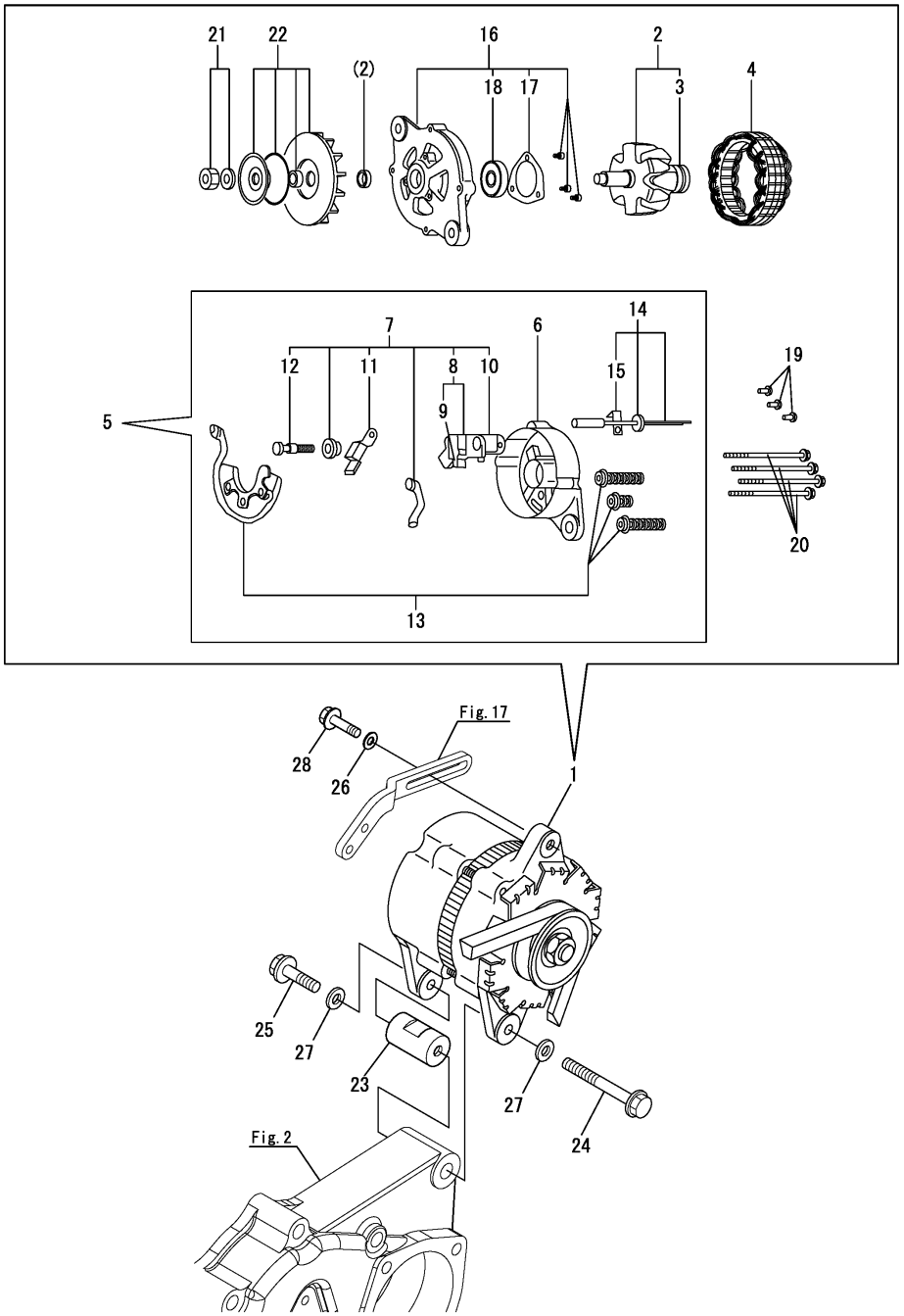

(A)=4JH4AE (D)=
(B)= (E)=
(C)= (F)=

No.	Lev.	Parts No.	Description	Q'ty (A)	(B)	(C)	(D)	(E)	(F)	I	R
1	1	119573-77201	ALTERNATER(12V-80A	1							
2	2	XL180G61000	ROTOR ASSY	1							
3	3	119129-77320	BEARING, BALL	1							
4	2	XL180120000	STATOR ASSY	1							
5	2	XL180G63006	COVER ASSY, REAR	1							
6	3	XL180G13012	COVER, REAR	1							
7	3	XL180G43150	BRUSH ASSY,REGULATOR	1							
8	4	XL155G1330	BRUSH ASSY	1							
9	5	XL225G1325	BRUSH SET	2							
10	4	124080-77390	REGULATOR ASSY	1							
11	4	XL225431800	CONDENSER ASSY	1							
12	4	124080-77520	BOLT M5	2							
13	3	XL1808320	DIODE ASY	1							
14	3	119129-77250	WIRE, LEAD	1							
15	4	119129-77260	CLAMP	1							
16	2	XL235340110	COVER ASSY, FRONT	1							
17	3	XL150M14041	RETAINER	1							
18	3	X6303BM0000	BEARING, BALL	1							
19	2	119129-77930	SCREW KIT	1							
20	2	119129-77890	BOLT, THROUGH	4							
21	2	119129-77900	NUT ASSY, PULLEY	1							
22	2	XL180G85001	PULLEY ASSY	1							
23	1	129670-77350	PIECE	1							
24	1	129695-77371	BOLT, M10X70	1							
24-1	1	129670-77370	BOLT 10X 70	1							R
	(A=*2007.12)										
25	1	129695-77380	BOLT, M10X30	1							
25-1	1	129670-77380	BOLT 10X 30	1							R
	(A=*2007.12)										
26	1	22137-080000	WASHER, 8	1							
27	1	22137-100000	WASHER, 10	2							
28	1	26106-080252	BOLT, M8X 25 PLATED	1							

N:Old $\xleftrightarrow[\text{No}]{\text{Yes}}$ New, Q:Old $\xleftrightarrow[\text{Yes}]{\text{No}}$ New, R:Old $\xleftrightarrow[\text{Yes}]{\text{Yes}}$ New, S:Old $\xleftrightarrow[\text{No}]{\text{No}}$ New, W:Add, Z:Discontinued, F:Interchangeable by set, K:Q'ty Change

Copyright (C) 2014 YANMAR CO., LTD. All RightsReserved.

Fig.37. V-BELT COVER

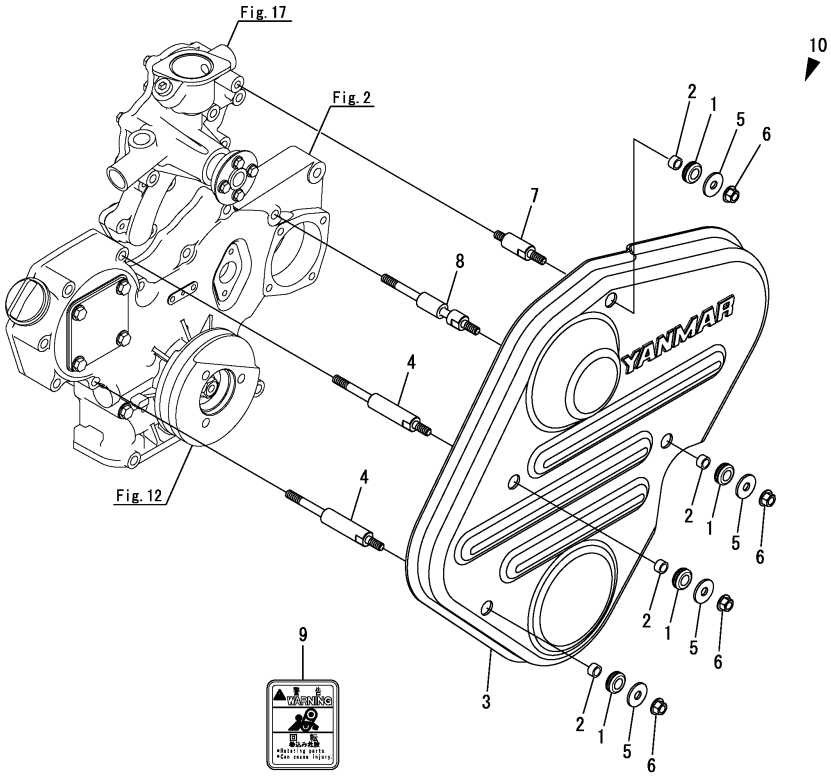

(A)=4JH4AE (D)=
(B)= (E)=
(C)= (F)=

No.	Lev.	Parts No.	Description	Q'ty (A)	(B)	(C)	(D)	(E)	(F)	I	R
1	1	128990-77610	GROMMET	4							
2	1	128990-77430	COLLAR	4							
3	1	129271-77401	COVER, BELT	1							
4	1	129271-77410	BOLT	2							
4-1	1	129271-77411	BOLT,BELT COVER	2						S	
	(A=*2012.11)										
5	1	22157-080000	WASHER, 8	4							
6	1	26306-080002	NUT, M8	4							
7	1	129271-77420	BOLT	1							
7-1	1	129271-77421	BOLT,BELT COVER	1						S	
	(A=*2012.11)										
8	1	129271-77430	BOLT	1							
9	1	128377-07350	LABEL, CAUTION	1						W	
	(A=*2004.03)										
10	1	129271-77390	COVER,BELT CMP	1						W	1
	(A=*2008.11)										

Remarks
(1)Include No.1, 2, 3, 9.

N:Old $\xleftarrow[\text{No}]{\text{Yes}}$ New, Q:Old $\xleftarrow[\text{Yes}]{\text{No}}$ New, R:Old $\xleftarrow[\text{Yes}]{\text{Yes}}$ New, S:Old $\xleftarrow[\text{No}]{\text{No}}$ New, W:Add, Z:Discontinued, F:Interchangeable by set, K:Q'ty Change

Copyright (C) 2014 YANMAR CO., LTD. All RightsReserved.

Fig.38. V-BELT COVER & GENERATOR ATTACHIMENT(OPTIONAL)

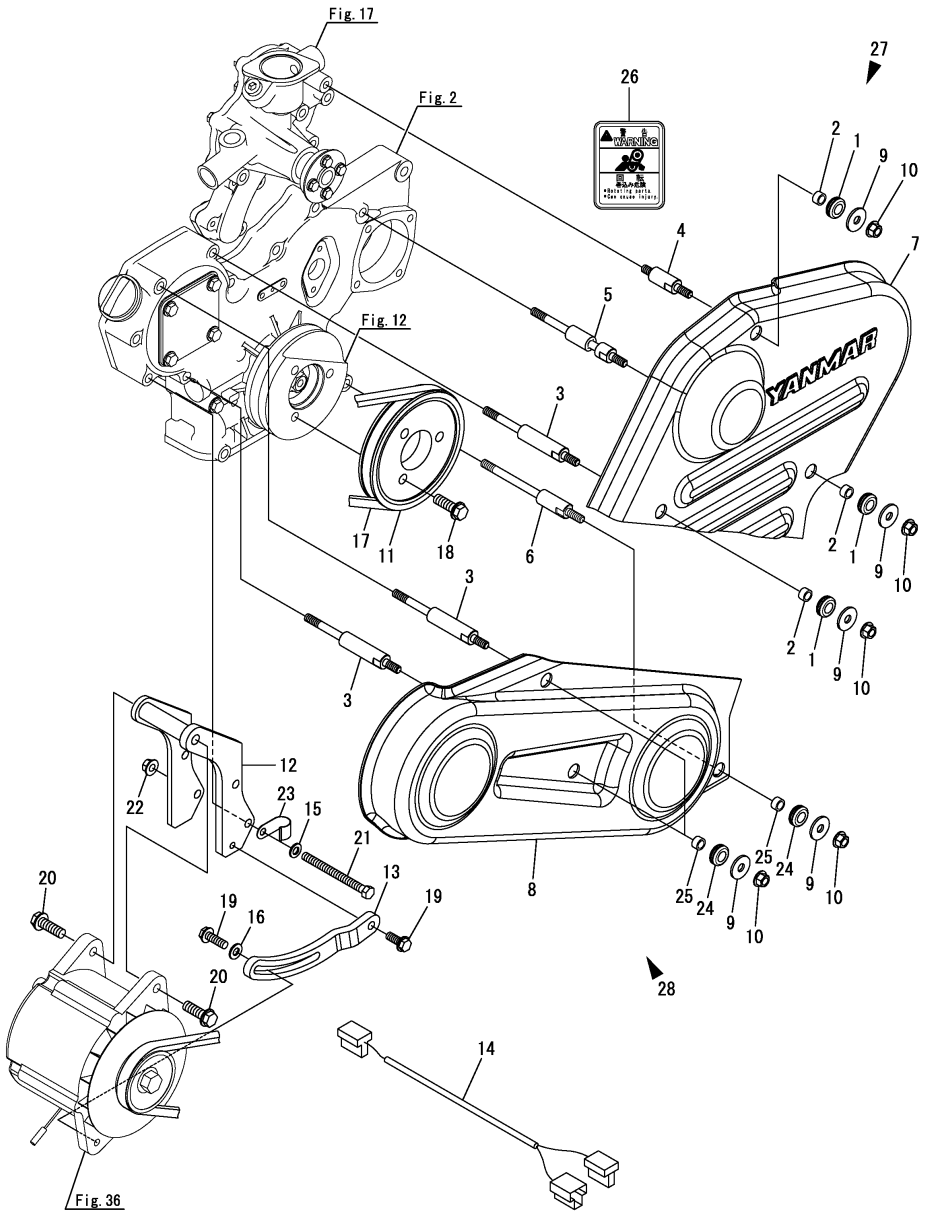

(A)=4JH4AE (D)=
(B)= (E)=
(C)= (F)=

No.	Lev.	Parts No.	Description	Q'ty (A)	(B)	(C)	(D)	(E)	(F)	I	R
1	1	128990-77610	GROMMET	6							
2	1	128990-77430	COLLAR	6							
3	1	129271-77410	BOLT	3							
3-1	1	129271-77411	BOLT,BELT COVER	3						S	
	(A=*2012.11)										
4	1	129271-77420	BOLT	1							
4-1	1	129271-77421	BOLT,BELT COVER	1						S	
	(A=*2012.11)										
5	1	129271-77430	BOLT	1							
6	1	129271-77440	BOLT	1							
7	1	129271-77501	COVER, BELT	1							
7-1	1	129271-77501	COVER, BELT	1						Z	
	(A=*2008.11)										
8	1	129271-77510	COVER, BELT	1							
9	1	22157-080000	WASHER, 8	6							
10	1	26306-080002	NUT, M8	6							
11	1	129271-21350	V-PULLEY	1							
12	1	129271-77311	BRACKET,ALTERNATOR	1							
13	1	129271-77330	ADJUSTER	1							
14	1	129271-77931	HARNESS,ALTERNATOR	1							
15	1	22137-080000	WASHER, 8	2							
16	1	22137-080000	WASHER, 8	1							
17	1	25132-003800	V-BELT, A38	1							
18	1	26106-100302	BOLT, M10X 30 PLATED	3							
19	1	26106-080252	BOLT, M8X 25 PLATED	2							
20	1	26106-100302	BOLT, M10X 30 PLATED	2							
21	1	26116-080904	BOLT, M8X 90 PLATED	2							
22	1	26306-080002	NUT, M8	2							
23	1	129150-03100	RETAINER, PIPE	1							
24	1	128990-77610	GROMMET	3							
25	1	128990-77430	COLLAR	3							
26	1	128377-07350	LABEL, CAUTION	1						W	
	(A=*2008.11)										
27	1	129271-77480	COVER,BELT CMP	1						W	1
	(A=*2008.11)										
28	1	129271-77490	COVER,BELT CMP	1						W	2
	(A=*2008.11)										

Remarks
(1)Include No.1, 2, 7, 26.
(2)Include No.8, 24, 25.

N:Old $\xleftarrow[\text{No}]{\text{Yes}}$ New, Q:Old $\xleftarrow[\text{Yes}]{\text{No}}$ New, R:Old $\xleftarrow[\text{Yes}]{\text{Yes}}$ New, S:Old $\xleftarrow[\text{No}]{\text{No}}$ New, W:Add, Z:Discontinued, F:Interchangeable by set, K:Q'ty Change

Copyright (C) 2014 YANMAR CO., LTD. All RightsReserved.

Fig.39. WIRE HARNESS & SENSOR

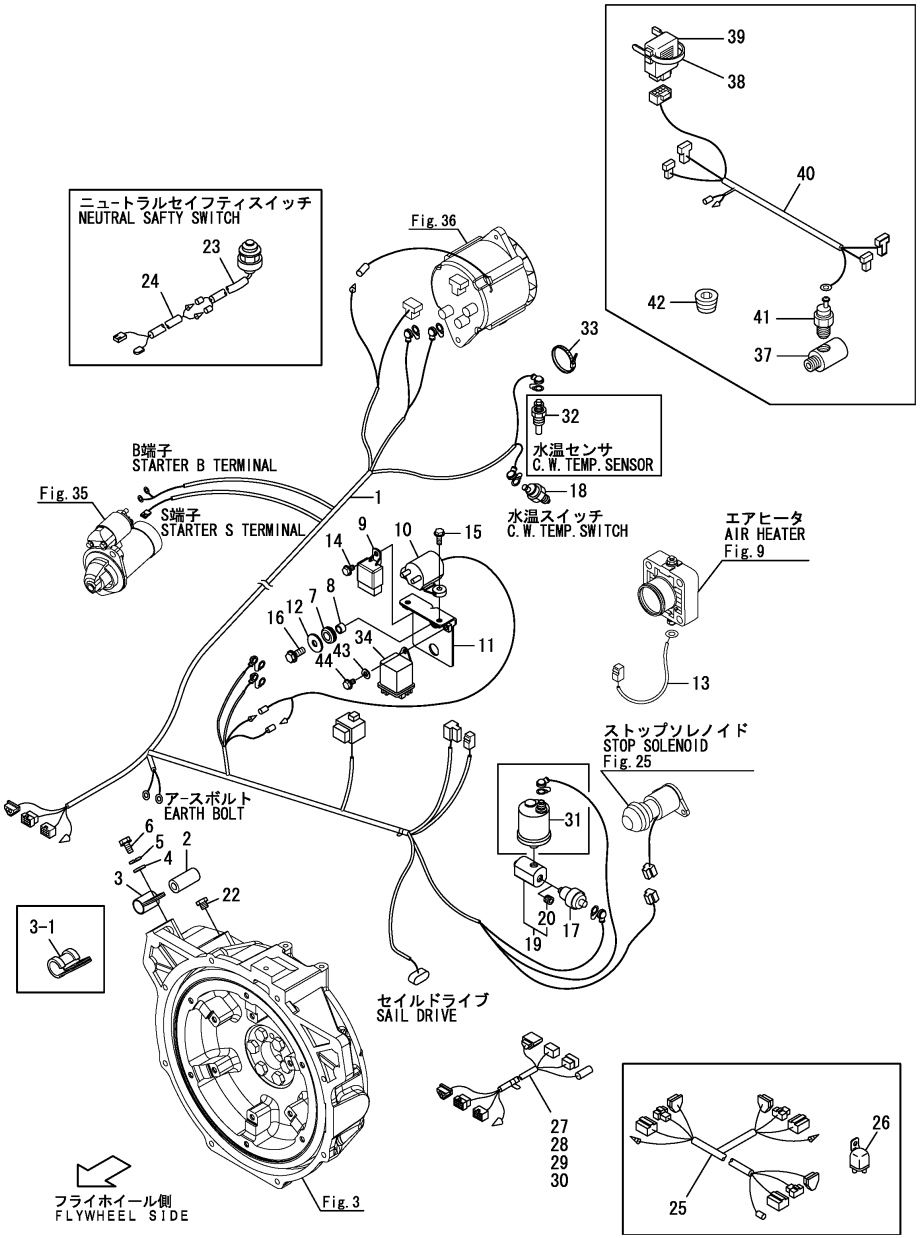

Remarks
(1)Optional parts.
(2)2-Place expression (Optional parts).

(A)=4JH4AE (D)=
(B)= (E)=
(C)= (F)=

No.	Lev.	Parts No.	Description	Q'ty (A)	(B)	(C)	(D)	(E)	(F)	I	R
1	1	129670-77920	HARNESS, WIRE	1							
2	1	124770-77940	PROTECTOR	1							
2-1	1	129670-77940	PROTECTOR	1						R	
	(A=*2007.12)										
2-2	1	129670-77940	PROTECTOR	1						Z	
	(A=*2010.12)										
3	1	124070-77950	CLAMP	1							
3-1	1	129672-77950	RETAINER	1						N	
	(A=*2010.12)										
4	1	22137-080000	WASHER, 8	1							
5	1	22217-080000	WASHER, SPRING 8	1							
6	1	26106-080162	BOLT, M8X 16 PLATED	1							
7	1	128990-77610	GROMMET	2							
8	1	128990-77430	COLLAR	2							
9	1	119247-77100	RELAY, SAFETY	1							
10	1	120270-77511	RELAY, MAGNETIC	1							
10-1	1	128990-77550	RELAY, MAGNETIC	1						N	
	(A=*2008.04)										
11	1	128990-77400	BRACKET, RELAY	1							
12	1	22157-080000	WASHER, 8	2							
13	1	129271-77921	HARNESS,WIRE(HEATER	1							
14	1	26106-060102	BOLT, M6X 10 PLATED	1							
15	1	26106-060162	BOLT, M6X 16 PLATED	2							
16	1	26106-080202	BOLT, M8X 20 PLATED	2							
17	1	124060-39452	SWITCH, 0.2KG	1							
17-1	1	121252-39450	SWITCH, 0.5KG	1						N	
	(A=E07544)										
18	1	120130-91370	SWITCH, 100	1							
19	1	129670-39600	DAMPER ASSY, R1/8	1							
20	2	23875-010000	PLUG, R01	1							
22	1	23887-180002	PLUG, 18	1							
23	1	120270-77101	SWITCH, SAFETY	1							1
23-1	1	120270-77102	SWITCH, SAFETY	1						N	1
	(A=*2007.09)										
24	1	129570-77960	HARNESS, WIRE	1							1
25	1	129574-77980	HARNESS, WIRE	1							2
26	1	119773-91850	RELAY	1							2
27	1	129574-77710	HARNESS, WIRE 4M	1							1
28	1	129574-77720	HARNESS, WIRE 6M	1							1
29	1	128391-77720	HARNESS, WIRE	1							1
30	1	129574-77740	HARNESS, WIRE 10M	1							1
31	1	119773-91650	SENSOR	1							1
32	1	119773-91700	SENDER	1							1
33	1	194250-51660	BAND, NYLON	1							
33-1	1	29622-250001	BAND, RF250	1						R	
	(A=*2012.04)										
33-2	1	128990-59890	BAND,200	1						R	
	(A=*2013.07)										
34	1	128990-77910	RELAY, GROW	1							
34-1	1	128990-77911	RELAY ASSY, GLOW	1						N	
	(A=*2010.11)										

N:Old $\xleftarrow[\text{No}]{\text{Yes}}$ New, Q:Old $\xleftarrow[\text{Yes}]{\text{No}}$ New, R:Old $\xleftarrow[\text{Yes}]{\text{Yes}}$ New, S:Old $\xleftarrow[\text{No}]{\text{No}}$ New, W:Add, Z:Discontinued, F:Interchangeable by set, K:Q'ty Change

++ CONTINUE ++

Copyright (C) 2014 YANMAR CO., LTD. All RightsReserved.

Fig.39. WIRE HARNESS & SENSOR

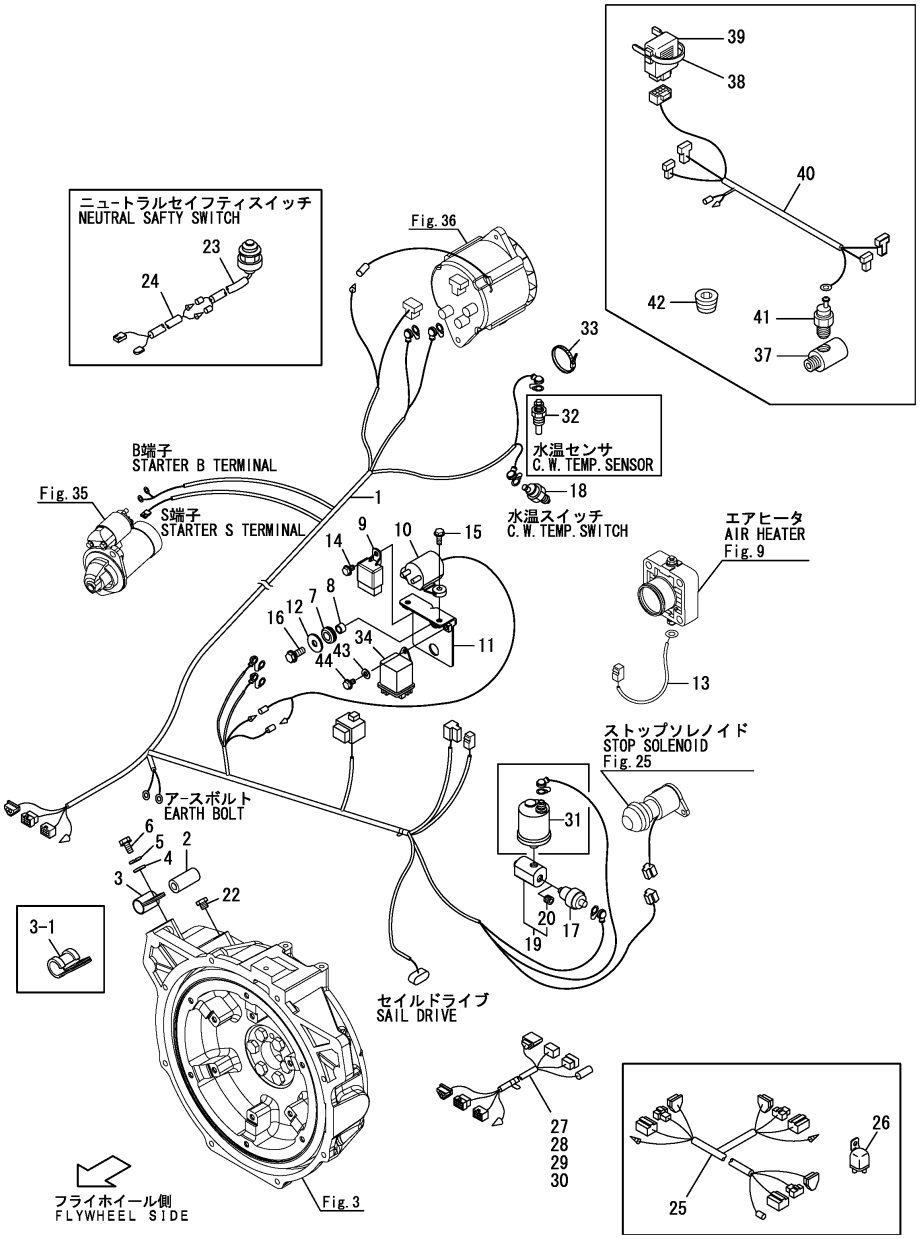

(A)=4JH4AE (D)=
(B)= (E)=
(C)= (F)=

No.	Lev.	Parts No.	Description	Q'ty (A)	(B)	(C)	(D)	(E)	(F)	I	R
35-1	2	129052-77921	BODY, RELAY	1						N	
	(A=*2010.11)										
37	1	129671-49990	JOINT, R3/8	1							1
38	1	194250-51660	BAND, NYLON	3							1
38-1	1	29622-250001	BAND, RF250	3						R	1
	(A=*2012.04)										
38-2	1	128990-59890	BAND,200	1						R	1
	(A=*2013.07)										
39	1	119575-77071	CONTROLLER	1							1
40	1	129670-77980	HARNESS, WIRE	1							1
41	1	124616-91370	SWITCH, 42	1							1
42	1	23875-030000	PLUG, R03	1							1
43	1	22217-060000	WASHER, SPRING 6	1							
44	1	26106-060082	BOLT, M6X 8 PLATED	1							

Remarks
(1)Optional parts.
(2)2-Place expression (Optional parts).

N:Old $\xleftarrow[\text{No}]{\text{Yes}}$ New, Q:Old $\xleftarrow[\text{Yes}]{\text{No}}$ New, R:Old $\xleftarrow[\text{Yes}]{\text{Yes}}$ New, S:Old $\xleftarrow[\text{No}]{\text{No}}$ New, W:Add, Z:Discontinued, F:Interchangeable by set, K:Q'ty Change

Copyright (C) 2014 YANMAR CO., LTD. All RightsReserved.

Fig.40. INSTRUMENT PANEL(B-TYPE)(OPTIONAL)

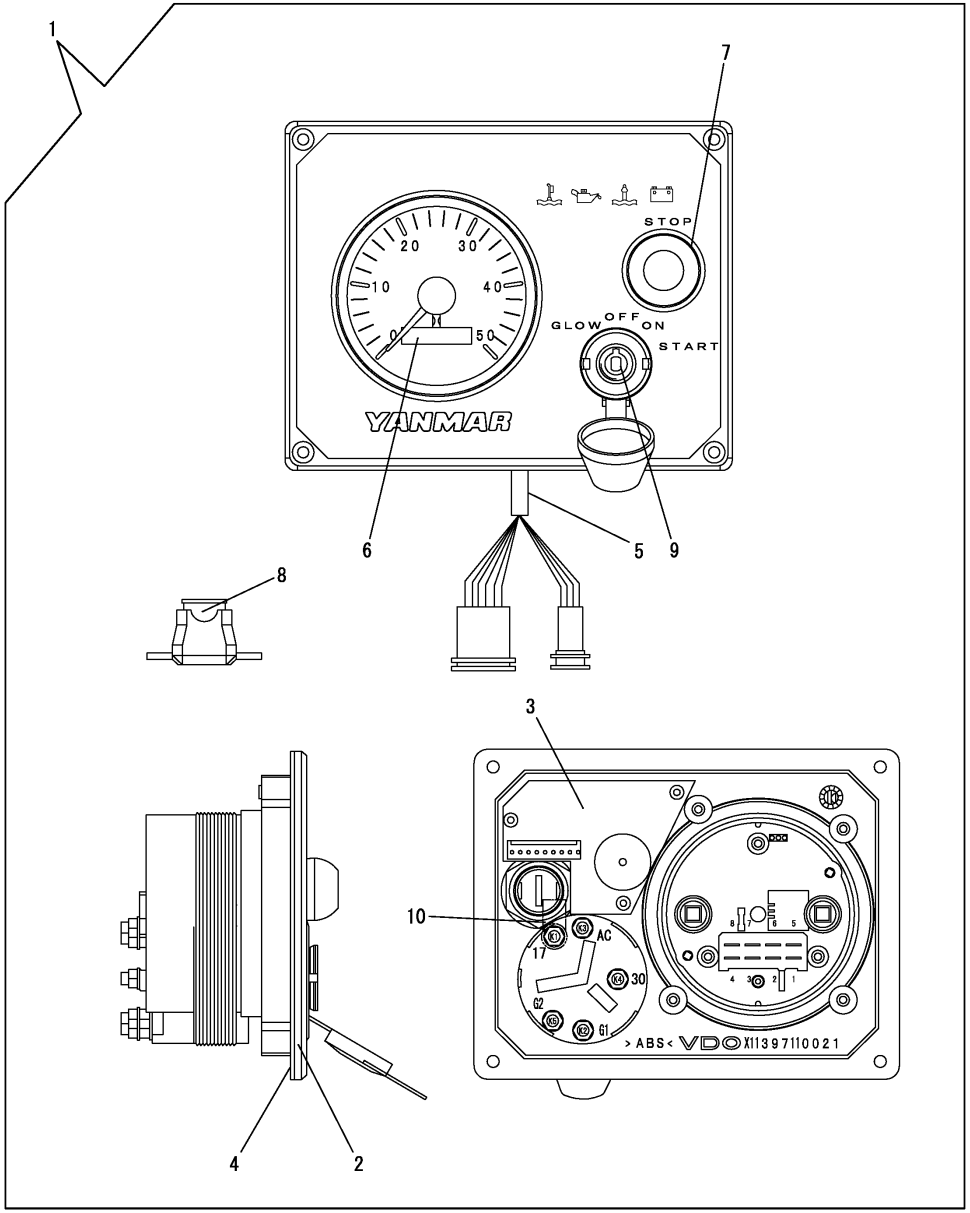

(A)=4JH4AE (D)=
(B)= (E)=
(C)= (F)=

No.	Lev.	Parts No.	Description	Q'ty (A)	(B)	(C)	(D)	(E)	(F)	I	R
1	1	129271-91111	PANEL, INSTRUMENT B	1							
1-1	1	129271-91112	PANEL	1						N	
	(A=*2008.09)										
1-2	1	129271-91113	PANEL, INSTRUMENT B	1						N	
	(A=*2009.10)										
2	2	129271-91120	PANEL WITH COVERFOIL	1							
3	2	129271-91130	CIRCUIT	1							
3-1	2	129271-91131	CIRCUIT WITH LED&BZR	1						N	
	(A=*2008.09)										
3-2	2	129271-91132	CIRCUIT WITH LED&BZR	1						N	
	(A=*2009.10)										
4	2	129271-91140	SEAL	1							
5	2	129271-91150	HARNESS, WIRE	1							
6	2	129271-91210	TACHOMETER	1							
6-1	2	129271-91211	TACHOMETER (AN)10.29	1						N	
	(A=*2009.10)										
7	2	129271-91220	SWITCH, STOP	1							
8	2	129271-91230	FUSE	1							
9	2	127412-91250	SWITCH, KEY	1							
10	2	129271-91260	CAP, RUBBER M5	1							

N:Old $\xleftrightarrow[\text{No}]{\text{Yes}}$ New, Q:Old $\xleftrightarrow[\text{Yes}]{\text{No}}$ New, R:Old $\xleftrightarrow[\text{Yes}]{\text{Yes}}$ New, S:Old $\xleftrightarrow[\text{No}]{\text{No}}$ New, W:Add, Z:Discontinued, F:Interchangeable by set, K:Q'ty Change

Copyright (C) 2014 YANMAR CO., LTD. All RightsReserved.

Fig.41. INSTRUMENT PANEL(C-TYPE)(OPTIONAL)

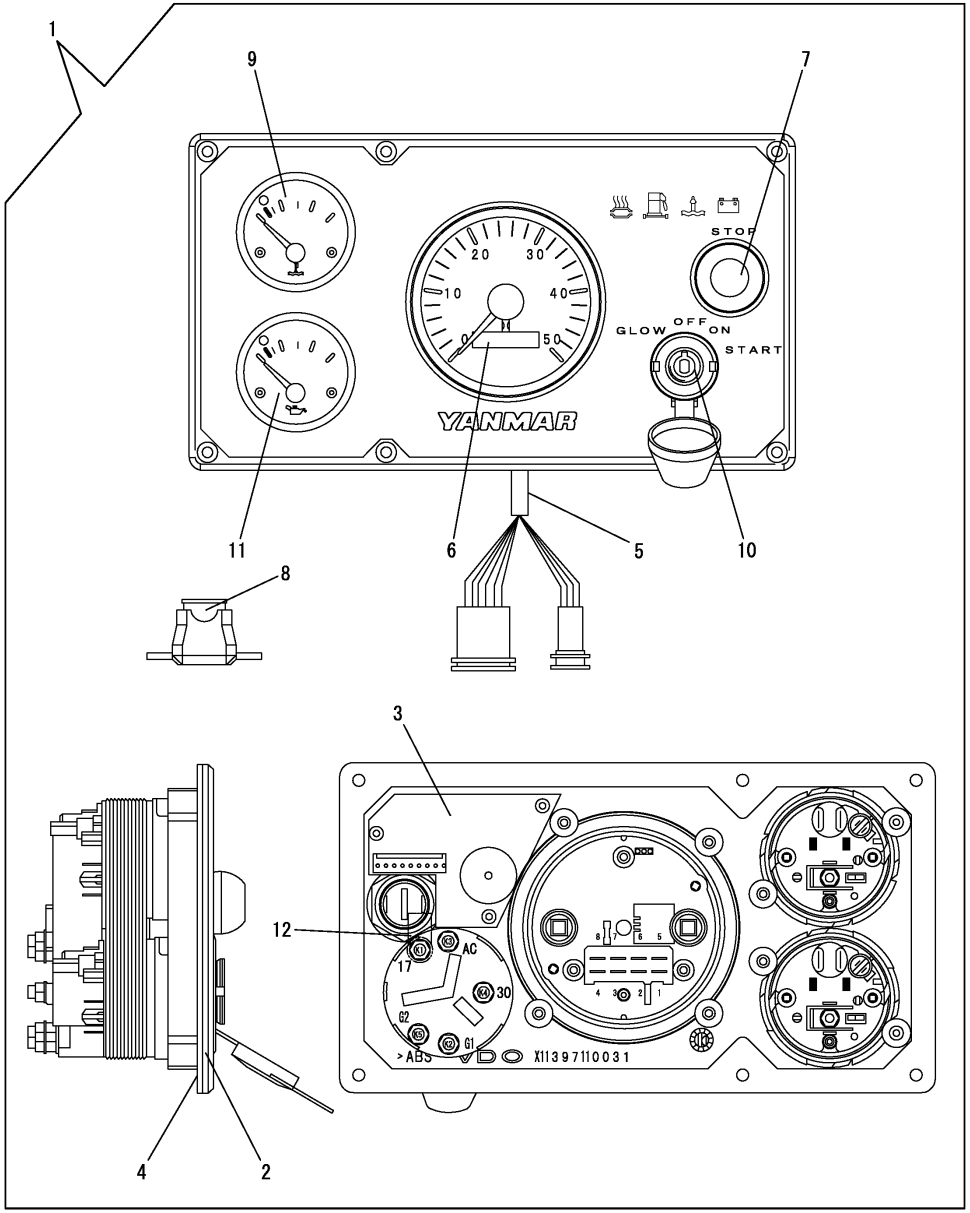

(A)=4JH4AE (D)=
(B)= (E)=
(C)= (F)=

No.	Lev.	Parts No.	Description	Q'ty (A)	(B)	(C)	(D)	(E)	(F)	I	R
1	1	129271-91161	PANEL, INSTRUMENT C	1							
1-1	1	129271-91162	C-PANEL(VDO	1						N	
	(A=*2008.09)										
1-2	1	129271-91163	PANEL, INSTRUMENT C	1						N	
	(A=*2009.10)										
2	2	129271-91170	PANEL WITH COVERFOIL	1							
3	2	129271-91180	CIRCUIT	1							
3-1	2	129271-91181	CIRCUIT	1						N	
	(A=*2008.09)										
3-2	2	129271-91182	CIRCUIT WITH LED&BZR	1						N	
	(A=*2009.10)										
4	2	129271-91190	RUBBER, SEAL	1							
5	2	129271-91200	HARNESS, WIRE	1							
6	2	129271-91210	TACHOMETER	1							
6-1	2	129271-91211	TACHOMETER (AN)10.29	1						N	
	(A=*2009.10)										
7	2	129271-91220	SWITCH, STOP	1							
8	2	129271-91230	FUSE	1							
9	2	129271-91240	THERMOMETER, WATER	1							
10	2	127412-91250	SWITCH, KEY	1							
11	2	129271-91250	GAUGE	1							
12	2	129271-91260	CAP, RUBBER M5	1							

N:Old $\overset{\text{Yes}}{\underset{\text{No}}{\leftrightarrows}}$ New, Q:Old $\overset{\text{No}}{\underset{\text{Yes}}{\leftrightarrows}}$ New, R:Old $\overset{\text{Yes}}{\underset{\text{Yes}}{\leftrightarrows}}$ New, S:Old $\overset{\text{No}}{\underset{\text{No}}{\leftrightarrows}}$ New, W:Add, Z:Discontinued, F:Interchangeable by set, K:Q'ty Change

Copyright (C) 2014 YANMAR CO., LTD. All RightsReserved.

Fig.44. (41A)INSTRUMENT PANEL(B-TYPE : KEYLES)(OPTIONAL)

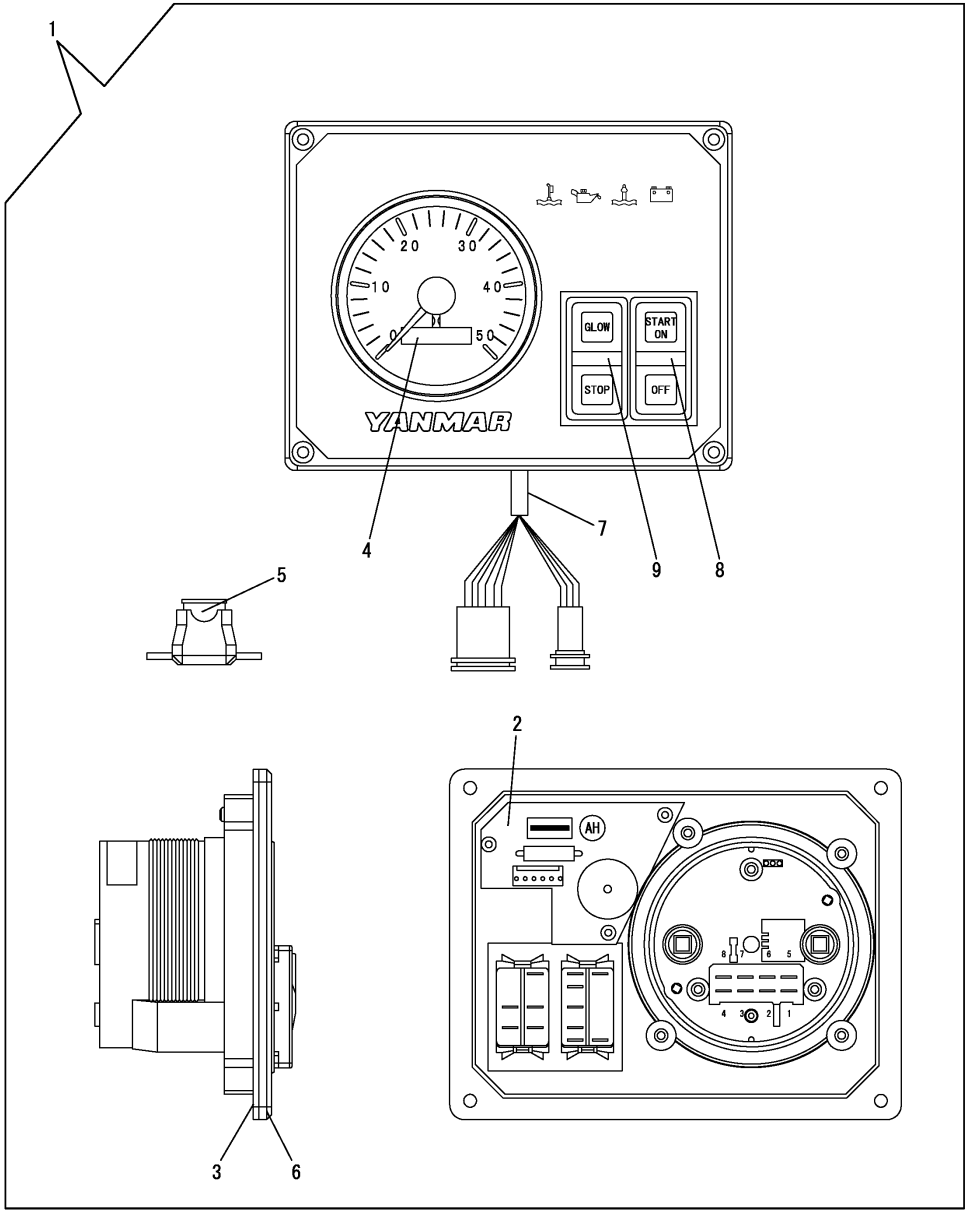

(A)=4JH4AE (D)=
(B)= (E)=
(C)= (F)=

No.	Lev.	Parts No.	Description	Q'ty (A)	(B)	(C)	(D)	(E)	(F)	I	R
1	1	129271-91300	PANEL	1						W	
	(A=*2007.04)										
1-1	1	129271-91301	PANEL	1						N	
	(A=*2008.09)										
1-2	1	129271-91302	PANEL,B KEYLESS	1						N	
	(A=*2009.10)										
2	2	129271-91130	CIRCUIT	1							
2-1	2	129271-91131	CIRCUIT WITH LED&BZR	1						N	
	(A=*2008.09)										
2-2	2	129271-91132	CIRCUIT WITH LED&BZR	1						N	
	(A=*2009.10)										
3	2	129271-91140	SEAL	1							
4	2	129271-91210	TACHOMETER	1							
4-1	2	129271-91211	TACHOMETER (AN)10.29	1						N	
	(A=*2009.10)										
5	2	129271-91230	FUSE	1							
6	2	129271-91310	PANEL WITH COVERFOIL	1							
7	2	129271-91320	HARNESS,B KEYLESS	1							
8	2	129271-91330	SWITCH,OFF/START	1							
9	2	129271-91340	SWITCH,GLOW/STOP	1							

N:Old ←Yes/No→ New, Q:Old ←No/Yes→ New, R:Old ←Yes/Yes→ New, S:Old ←No/No→ New, W:Add, Z:Discontinued, F:Interchangeable by set, K:Q'ty Change

Copyright (C) 2014 YANMAR CO., LTD. All RightsReserved.

Fig.45. (41B)INSTRUMENT PANEL(C-TYPE : KEYLES)(OPTIONAL)

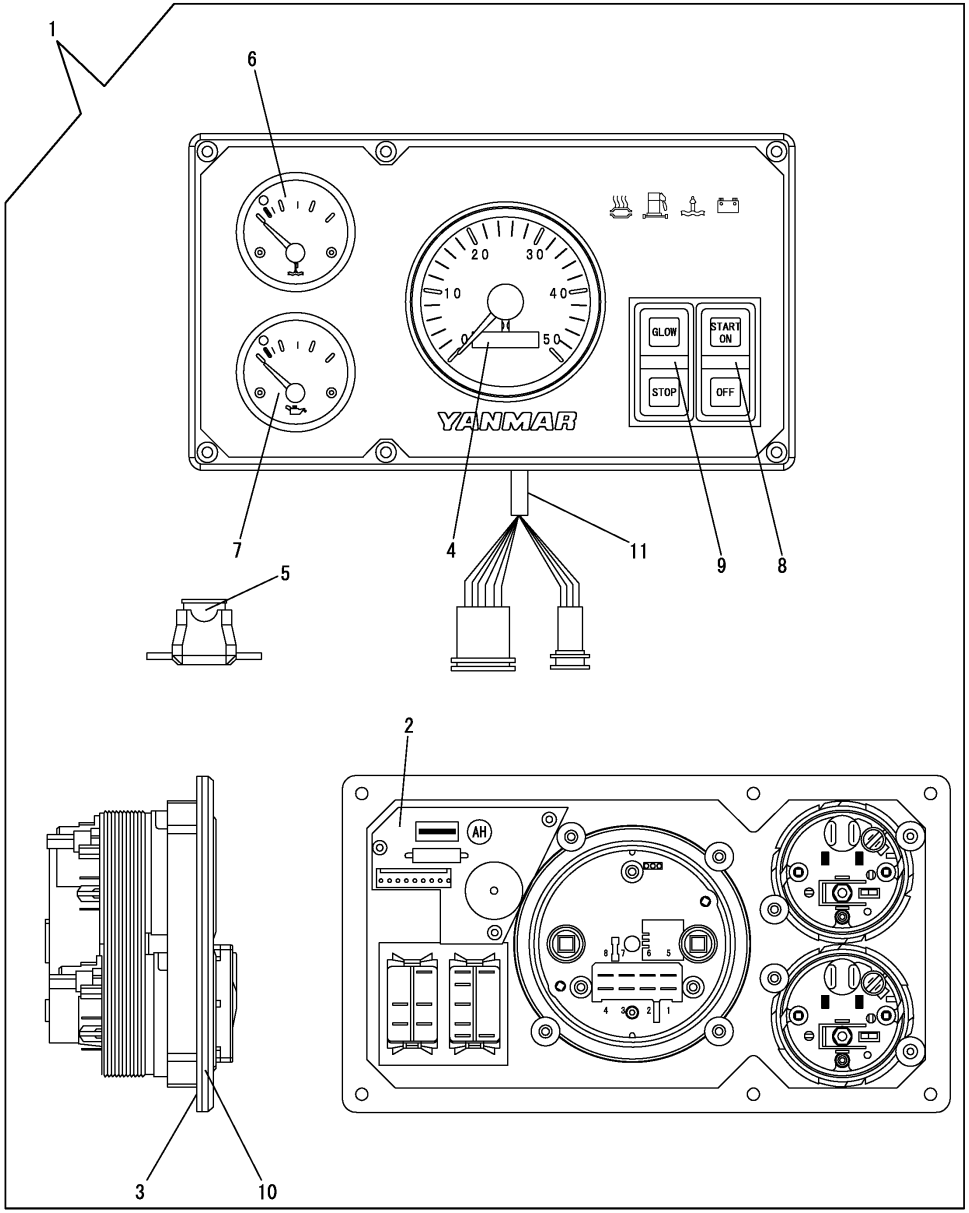

(A)=4JH4AE (D)=
(B)= (E)=
(C)= (F)=

No.	Lev.	Parts No.	Description	Q'ty (A)	(B)	(C)	(D)	(E)	(F)	I	R
1	1	129271-91350	PANEL	1						W	
	(A=*2007.04)										
1-1	1	129271-91351	PANEL	1						N	
	(A=*2008.09)										
1-2	1	129271-91352	PANEL,C KEYLESS	1						N	
	(A=*2009.10)										
2	2	129271-91180	CIRCUIT	1							
2-1	2	129271-91181	CIRCUIT	1						N	
	(A=*2008.09)										
2-2	2	129271-91182	CIRCUIT WITH LED&BZR	1						N	
	(A=*2009.10)										
3	2	129271-91190	RUBBER, SEAL	1							
4	2	129271-91210	TACHOMETER	1							
4-1	2	129271-91211	TACHOMETER (AN)10.29	1						N	
	(A=*2009.10)										
5	2	129271-91230	FUSE	1							
6	2	129271-91240	THERMOMETER, WATER	1							
7	2	129271-91250	GAUGE	1							
8	2	129271-91330	SWITCH,OFF/START	1							
9	2	129271-91340	SWITCH,GLOW/STOP	1							
10	2	129271-91360	PANEL	1							
11	2	129271-91370	HARNESS, WIRE	1							

N:Old $\xleftrightarrow[\text{No}]{\text{Yes}}$ New, Q:Old $\xleftrightarrow[\text{Yes}]{\text{No}}$ New, R:Old $\xleftrightarrow[\text{Yes}]{\text{Yes}}$ New, S:Old $\xleftrightarrow[\text{No}]{\text{No}}$ New, W:Add, Z:Discontinued, F:Interchangeable by set, K:Q'ty Change

Copyright (C) 2014 YANMAR CO., LTD. All RightsReserved.

Fig.42. TOOLS

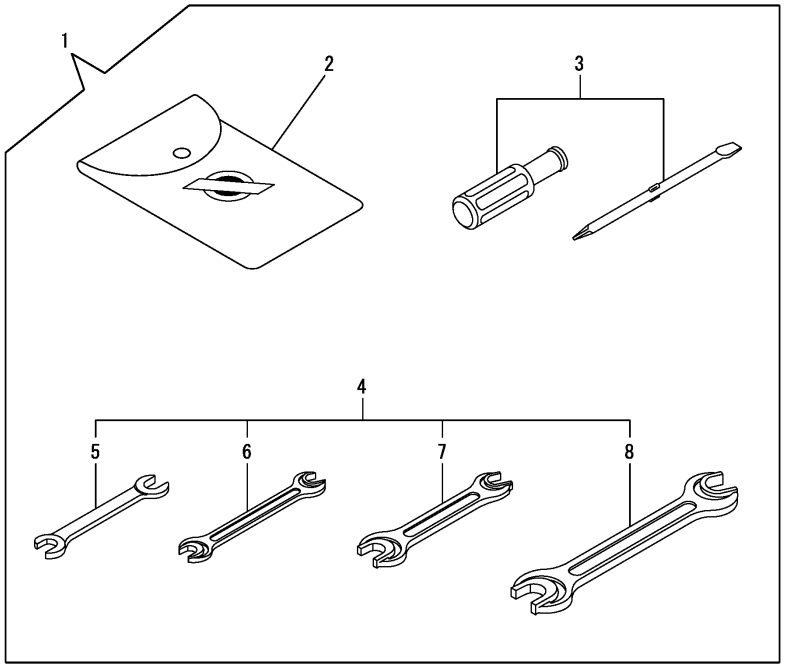

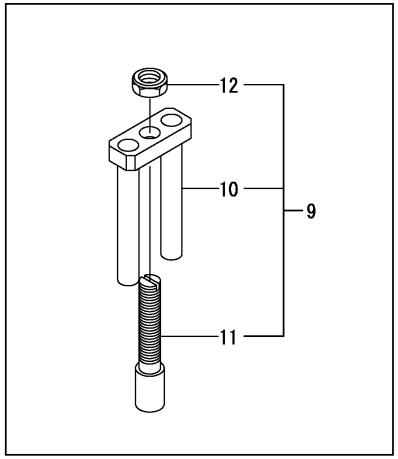

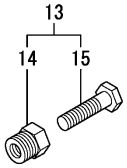

(A)=4JH4AE (D)=
(B)= (E)=
(C)= (F)=

No.	Lev.	Parts No.	Description	Q'ty (A)	(B)	(C)	(D)	(E)	(F)	I	R
1	1	129270-92100	BOX, TOOL	1							
2	2	129270-92600	BAG, TOOL	1							
3	2	129270-92650	DRIVER	1							
4	2	129270-92690	WRENCH ASSY	1							
5	3	129270-92610	WRENCH, 10X13	1							
6	3	129270-92620	WRENCH, 12X14	1							
7	3	129270-92630	WRENCH, 17X19	1							
8	3	129270-92640	WRENCH, 22X24	1							
9	1	129470-92300	TOOL ASSY, NOZZLE	1							
10	2	129470-92310	TOOL,NOZZLE REMOVE A	1							
11	2	129470-92320	TOOL,NOZZLE REMOVE B	1							
12	2	26716-120002	NUT, M12	1							
13	1	129671-92110	PULLER ASSY	1							
14	2	129671-92120	PULLER	1							
15	2	129671-92130	BOLT, M10X40	1							

N:Old $\xleftrightarrow[\text{No}]{\text{Yes}}$ New, Q:Old $\xleftrightarrow[\text{Yes}]{\text{No}}$ New, R:Old $\xleftrightarrow[\text{Yes}]{\text{Yes}}$ New, S:Old $\xleftrightarrow[\text{No}]{\text{No}}$ New, W:Add, Z:Discontinued, F:Interchangeable by set, K:Q'ty Change

Copyright (C) 2014 YANMAR CO., LTD. All RightsReserved.

Fig.43. GASKET SET(OPTIONAL)

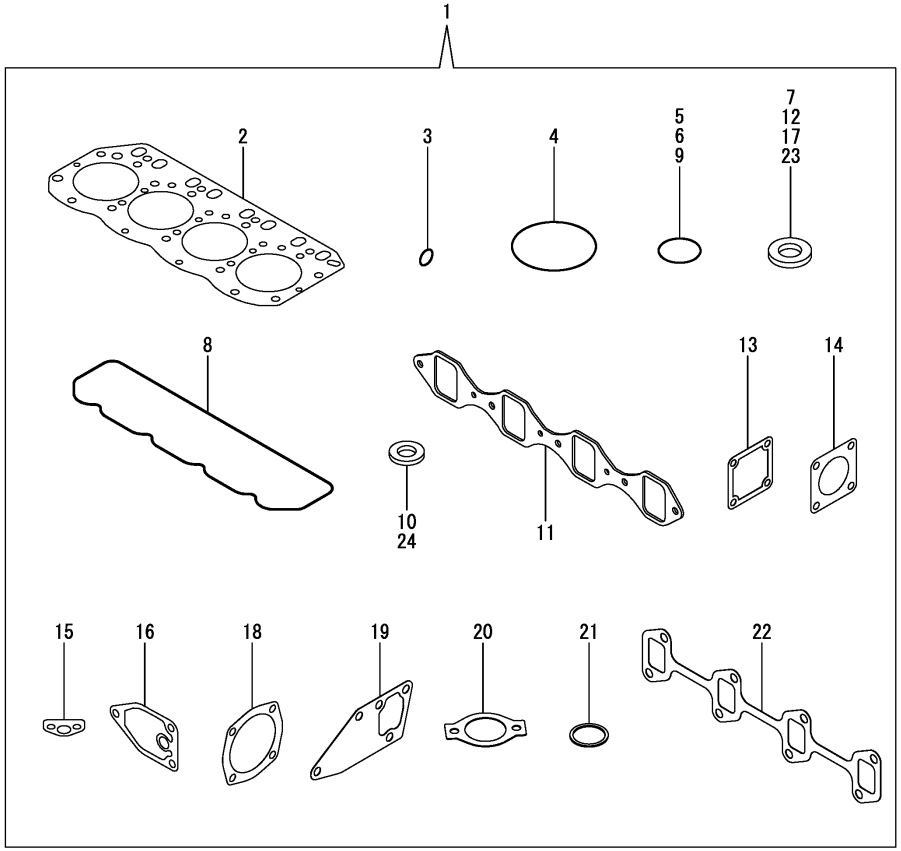

(A)=4JH4AE (D)=
(B)= (E)=
(C)= (F)=

No.	Lev.	Parts No.	Description	Q'ty (A)	(B)	(C)	(D)	(E)	(F)	I	R
1	1	729670-92600	GASKET SET	1							
2	2	129407-01340	GASKET, HEAD	1							
3	2	119609-32040	O-RING, P16	4							
4	2	121850-51960	O-RING	1							
5	2	24311-000320	O-RING, 1AP32.0	2							
6	2	24341-000240	O-RING, 1AS24.0	1							
7	2	22190-140002	WASHER, SEAL 14	4							
8	2	129601-11310	GASKET, BONNET	1							
9	2	24311-000120	O-RING, 1AP12.0	3							
10	2	23414-100000	GASKET, 10X1.0	1							
11	2	129470-12130	GASKET, MANIFOLD	1							
12	2	22190-080002	WASHER, SEAL 8	4							
13	2	129150-77511	GASKET	1							
14	2	129472-18090	GASKET	1							
15	2	129150-35042	GASKET	1							
16	2	129150-35111	GASKET	1							
17	2	22190-100002	WASHER, SEAL 10	2							
18	2	129150-01881	GASKET	2							
18-1	2	129C26-01890	GASKET, HO-P	2							R
	(A=*2012.06)										
19	2	129486-42050	GASKET, WATER PUMP	1							
20	2	129795-49551	GASKET	1							
21	2	129470-49810	GASKET, THERMOSTAT	1							
21-1	1	129150-49811	GASKET, THERMOSTAT	1							R
	(A=*2009.12)										
22	2	129550-13110	GASKET	1							
23	2	22190-120002	WASHER, SEAL 12	8							
24	2	23414-080000	GASKET, 8X1.0	1							

N:Old $\xleftrightarrow[\text{No}]{\text{Yes}}$ New, Q:Old $\xleftrightarrow[\text{Yes}]{\text{No}}$ New, R:Old $\xleftrightarrow[\text{Yes}]{\text{Yes}}$ New, S:Old $\xleftrightarrow[\text{No}]{\text{No}}$ New, W:Add, Z:Discontinued, F:Interchangeable by set, K:Q'ty Change

Copyright (C) 2014 YANMAR CO., LTD. All RightsReserved.

Parts No. Index

Parts No.	Fig. No.	Ref. No.
104214-83980	34	18
105430-55041	31	8
105583-85900	34	13
114250-53080	27	5
114250-53120	27	10
114250-53130	27	11
114250-53140	27	12
114250-53210	27	13
114250-53400	27	14
119129-77250	36	14
119129-77260	36	15
119129-77320	36	3
119129-77890	36	20
119129-77900	36	21
119129-77930	36	19
119225-52102	26	1
119247-77100	39	9
119573-77201	36	1
119575-77071	39	39
119609-32040	2	17
	43	3
119620-01750	3	11
119620-49290	14	24
	18	12
119625-11880	7	19
119660-61901	25	25
119773-42570	16	9
119773-91650	39	31
119773-91700	39	32
119773-91850	39	26
119802-01561	2	13
119802-03110	8	4
119802-03121	8	5
119802-03130	8	6
119802-03141	8	7
119802-11260	7	25
119802-11270	7	26
119802-11870	7	18
119802-21202	12	5
119802-21660	12	9
119802-25051	11	9
119802-25071	11	12
119802-25101	11	10
119802-25901	11	15
119802-32070	2	8
119802-32100	2	7
119802-32130	2	20
119802-35110	14	10
119802-39450	15	2
119802-51090	24	55

Parts No.	Fig. No.	Ref. No.
119802-51560	24	59
119802-51590	24	65
119802-51600	24	66
119802-51680	24	68
119802-51690	24	69
119802-55610	29	1
119802-55810	29	3
119803-53400	27	14 -1
119807-61420	25	16
119865-21600	12	16
120130-11860	7	5
120130-91370	39	18
120149-08431	4	14
120270-54410	7	22
120270-77101	39	23
120270-77102	39	23 -1
120270-77511	39	10
120322-33050	18	9
120324-55750	30	1
120324-55751	30	1 -1
		1 -2
120324-55760	30	2
121023-01551	2	28
121111-21501	12	12
121252-39450	39	17 -1
121400-11340	7	15
121450-01560	16	24
121550-23200	13	13
121574-86320	32	14
121750-59910	30	14
121850-21680	12	11
121850-51960	2	21
	43	4
123310-77640	35	25
123325-35140	30	33
123325-35160	30	23
123325-35170	30	24
123325-49421	10	7
	16	18
123672-55760	30	27
123678-55890	30	31
123682-07852	6	4
124060-01050	1	10
124060-39452	39	17
124070-77950	39	3
124080-77390	36	10
124080-77520	36	12
124160-01751	2	14
	8	13
124160-01910	1	5

Parts No.	Fig. No.	Ref. No.
124160-01910	1	15
124160-11360	8	15
124160-39140	15	1
124195-77770	35	23
124240-01871	2	15
	16	25
		28
124398-49700	8	18 -1
124413-39100	14	28
124460-11340	7	16
124460-77680	14	30
	18	19
124550-01590	2	24
124616-91370	39	41
124770-77940	39	2
124976-34850	1	40
127412-91250	40	9
	41	10
128170-86501	32	21
128377-07150	6	1
	9	22
128377-07190	6	6
128377-07260	6	2
128377-07350	6	3
	37	9
	38	26
128377-07400	6	7
128377-07420	6	8
128377-07450	6	9
128377-07460	6	10
128391-77720	39	29
128397-44500	18	23
128397-44510	18	25
128990-07270	6	2 -1
128990-49320	17	31
		32
128990-49400	17	37
128990-59131	31	2
128990-59700	31	1
128990-59890	8	19
	26	4
		5
	39	33 -2
		38 -2
128990-77400	39	11
128990-77430	9	18
	37	2
	38	2
		25
	39	8

Parts No.	Fig. No.	Ref. No.
128990-77550	39	10 -1
128990-77610	37	1
	38	1
		24
	39	7
128990-77910	39	34
128990-77911	39	34 -1
129001-01250	1	11
129001-02931	1	25
129001-32330	2	11
129001-91841	2	22
129004-01190	1	39
129004-01520	2	12
129004-03010	8	2
129004-11650	7	30
129004-11900	7	20
129004-55612	29	1 -1
129005-11100	7	10
129005-22500	13	3
129005-22900	13	19
129005-22950	13	21
129005-59830	15	3
129006-35100	14	9
129006-44480	14	14
129008-51900	24	3 E
129008-51920	24	3 F
129008-53000	27	2
129009-51390	24	26 -1
129052-77921	39	35 -1
129054-42320	17	6
129065-55760	30	28
129065-55770	30	29
129065-55800	30	30
129100-01580	3	1
		5
	12	2
129100-01640	3	6
129100-11112	7	11
129100-23910	13	16
129120-77502	9	11
129150-01200	1	31
129150-01881	16	22
		26
		29
	43	18
129150-02020	1	7
129150-02450	11	4
129150-02871	1	33
129150-02931	1	28
129150-02941	1	36

Parts No. Index

Parts No.	Fig. No.	Ref. No.
129150-03070	8	3
129150-03100	38	23
129150-11230	7	31
129150-11280	7	27
129150-11370	7	17
129150-11750	7	33
129150-11810	7	7
129150-14101	11	7
129150-14200	11	1
129150-14400	11	2
129150-23601	13	14
129150-23611	13	17
129150-25301	11	14
129150-35042	14	1
	43	15
129150-35111	14	12
	43	16
129150-35170	14	13
129150-42059	17	2
129150-42301	17	4
129150-49811	17	28 -1
	43	21 -1
129150-59120	28	1
129150-59131	28	4
		8
129150-77511	9	12
	43	13
129155-51280	25	5
129155-61460	25	18
129156-44760	17	18
129171-85900	34	1
129202-22300	13	7
129255-61410	25	15
129263-42120	17	3
129270-44501	18	24
129270-49400	17	19
129270-59550	29	8
129270-59580	29	10
129270-81110	33	1
129270-81120	33	2
129270-81210	33	3
129270-81220	33	4
129270-92100	42	1
129270-92600	42	2
129270-92610	42	5
129270-92620	42	6
129270-92630	42	7
129270-92640	42	8
129270-92650	42	3
129270-92690	42	4

Parts No.	Fig. No.	Ref. No.
129271-01500	2	1
129271-12290	9	24
129271-12311	9	14
129271-12810	9	17
129271-21350	38	11
129271-34880	5	11
129271-42001	17	1
129271-42501	16	1
129271-42510	16	8
129271-42700	16	21
129271-49110	19	4
		17
		24
	20	4
129271-51590	24	65 -1
129271-51600	24	71 A
129271-77311	38	12
129271-77330	38	13
129271-77390	37	10
129271-77401	37	3
129271-77410	37	4
	38	3
129271-77411	37	4 -1
	38	3 -1
129271-77420	37	7
	38	4
129271-77421	37	7 -1
	38	4 -1
129271-77430	37	8
	38	5
129271-77440	38	6
129271-77480	38	27
129271-77490	38	28
129271-77501	38	7
		7 -1
129271-77510	38	8
129271-77921	39	13
129271-77931	38	14
129271-77950	25	61
129271-91111	40	1
129271-91112	40	1 -1
129271-91113	40	1 -2
129271-91120	40	2
129271-91130	40	3
	44	2
129271-91131	40	3 -1
	44	2 -1
129271-91132	40	3 -2
	44	2 -2
129271-91140	40	4

Parts No.	Fig. No.	Ref. No.
129271-91140	44	3
129271-91150	40	5
129271-91161	41	1
129271-91162	41	1 -1
129271-91163	41	1 -2
129271-91170	41	2
129271-91180	41	3
	45	2
129271-91181	41	3 -1
	45	2 -1
129271-91182	41	3 -2
	45	2 -2
129271-91190	41	4
	45	3
129271-91200	41	5
129271-91210	40	6
	41	6
	44	4
	45	4
129271-91211	40	6 -1
	41	6 -1
	44	4 -1
	45	4 -1
129271-91220	40	7
	41	7
129271-91230	40	8
	41	8
	44	5
	45	5
129271-91240	41	9
	45	6
129271-91250	41	11
	45	7
129271-91260	40	10
	41	12
129271-91300	44	1
129271-91301	44	1 -1
129271-91302	44	1 -2
129271-91310	44	6
129271-91320	44	7
129271-91330	44	8
	45	8
129271-91340	44	9
	45	9
129271-91350	45	1
129271-91351	45	1 -1
129271-91352	45	1 -2
129271-91360	45	10
129271-91370	45	11
129400-01730	5	5

Parts No.	Fig. No.	Ref. No.
129407-01340	1	32
	43	2
129410-03990	8	18
129417-33110	14	8
129417-33111	14	8 -1
129417-35150	14	11
129418-32320	2	10
129470-07230	7	37
129470-12120	9	3
129470-12130	9	7
	43	11
129470-13541	10	4
129470-49540	17	25
129470-49801	17	27
129470-49810	17	28
	43	21
129470-67200	32	2
129470-83750	34	22
129470-85900	34	14
129470-86500	32	19
129470-92300	42	9
129470-92310	42	10
129470-92320	42	11
129472-13560	10	5
129472-18090	10	2
		10
	43	14
129473-85900	34	3
129486-01670	3	9
129486-42050	17	16
	43	19
129495-55610	30	25
129495-55620	30	26
129495-59563	29	9
129495-77330	17	34
129508-32111	2	18
129508-32120	2	19
129508-33010	14	6
129508-33050	14	7
129508-49030	14	20
129550-13110	18	18
	43	22
129550-42350	17	17
129550-59120	28	5
129570-77960	39	24
129574-77710	39	27
129574-77720	39	28
129574-77740	39	30
129574-77980	39	25
129601-11241	7	24

Parts No. Index

Parts No.	Fig. No.	Ref. No.
129601-11251	7	28
129601-11310	8	10
	43	8
129601-11350	8	1
129601-21002	12	1
129601-51250	24	119
129602-11700	7	1
129608-77010	35	1
129608-77110	35	4
129642-61060	25	62
129657-49020	14	15
129657-49180	14	17
129670-01600	3	2
129670-01601	3	2 -1
129670-01700	5	1
129670-03090	8	17
129670-03091	8	17 -1
129670-07230	7	37 -1
		37 -2
	18	17 A
129670-07570	6	11
129670-08211	4	3
129670-08220	4	4
129670-08231	4	1
129670-08241	4	2
129670-08340	4	8
129670-08341	4	8 -1
129670-08350	4	7
129670-08351	4	7 -1
129670-08390	4	14 -1
129670-11960	8	20
129670-12360	9	15
129670-12410	9	16
129670-12411	9	16 -1
129670-13560	10	1
129670-13561	10	1 -1
129670-13600	18	17
	33	14
129670-21591	12	13
129670-22020	13	1
129670-34800	5	10
129670-35090	14	2
129670-39600	39	19
129670-39990	14	29 -1
129670-42520	16	6
129670-42531	16	3
129670-42540	16	5
129670-42550	16	7
129670-42560	16	11
129670-42570	16	15

Parts No.	Fig. No.	Ref. No.
129670-42580	16	17
129670-44150	18	6
129670-44430	18	8
129670-44450	18	11
129670-44460	18	7
129670-44570	18	26
129670-44910	18	1
129670-44911	18	1 -1
129670-49020	19	1
129670-49090	19	8
129670-49150	19	15
129670-49220	19	9
129670-49230	19	12
129670-49240	19	13
129670-49250	19	26
129670-49260	19	19
129670-49270	19	20
		27
129670-49280	10	6
129670-49360	19	3
129670-49390	17	33
129670-49410	19	10
129670-49500	10	9
	19	5
		11
		16
		21
		28
	20	3
	21	13
129670-51600	24	60
129670-55010	26	2
129670-55670	29	2
129670-55750	30	22
129670-55810	30	13
129670-59110	26	3
129670-59140	29	12
129670-59150	29	6
129670-59710	28	10
129670-59720	28	11
129670-59730	28	12
129670-59740	28	13
129670-67110	32	16
129670-67120	32	1
129670-77030	35	27
129670-77350	36	23
129670-77370	36	24 -1
129670-77380	36	25 -1
129670-77800	33	17
129670-77810	33	18

Parts No.	Fig. No.	Ref. No.
129670-77820	33	19
129670-77830	33	20
129670-77920	39	1
129670-77940	39	2 -1
		2 -2
129670-77980	39	40
129670-81040	33	9
129670-81050	33	10
129670-81060	33	11
129670-81100	33	12
129670-81110	33	13
129670-81200	33	5
129670-81210	33	6
129670-81220	33	7
129670-81230	33	8
129670-81850	12	25
129670-85900	34	2
129671-49110	19	18
		25
129671-49120	19	2
129671-49210	20	1
129671-49220	20	2
129671-49990	39	37
129671-92110	42	13
129671-92120	42	14
129671-92130	42	15
129672-77950	39	3 -1
129673-44090	18	4
129673-44131	18	5
129673-81250	12	23
129673-85100	34	15
129693-44300	7	34
129695-77371	36	24
129695-77380	36	25
129698-12100	9	1
129698-77020	35	2
129698-77101	35	3
129698-77120	35	5
129698-77130	35	7
129698-77140	35	6
129698-77150	35	8
129698-77161	35	9
129698-77170	35	10
129698-77180	35	17
129698-77190	35	18
129698-77200	35	19
129698-77210	35	20
129698-77220	35	21
129698-77230	35	22
129698-77240	35	15

Parts No.	Fig. No.	Ref. No.
129698-77250	35	16
129698-77260	35	11
129698-77270	35	13
129698-77280	35	14
129795-01780	3	8
129795-01800	2	6
129795-01950	2	16
129795-02412	1	14
129795-11120	7	12
129795-11180	7	13
129795-21661	12	10
129795-48800	21	1
129795-49551	17	26
	43	20
129900-07900	7	38
129900-32130	2	9
129907-51300	24	26
129916-49740	17	7
129916-59020	24	115
129C26-01890	16	26 -1
		29 -1
	43	18 -1
138603-59380	31	4
158552-51151	24	58
158552-51570	24	49
		50
158552-51571	24	49 -1
		50 -1
158552-51580	24	62
158552-51600	24	64
158552-51670	24	113
158552-51781	24	11
158552-52100	24	84
158552-52310	24	86
158552-52311	24	86 -1
158552-52400	24	42
158552-52500	24	85
158552-61441	25	17
158552-61900	25	47
158553-51630	24	72
158553-51660	24	76
158553-51670	24	67
158553-51680	24	77
158553-51741	24	9
158553-51770	24	38
158553-51930	24	15 -1
	25	31 -1
158553-61050	25	2
158553-61070	25	3
158557-51570	24	61

Parts No. Index

Parts No.	Fig. No.	Ref. No.
158563-51281	24	44
		45
158563-51330	24	33 A
		47
158600-51270	24	46
158601-51340	24	48
158601-51550	24	57
158601-51650	24	75
158601-51770	24	10
158601-51790	24	12
171008-03990	14	19 -1
		21
171051-01921	1	6
177070-03520	12	21
177073-02431	6	13
177088-02430	6	5
177090-03500	12	17
194250-51660	39	33
		38
196440-02380	4	10
196440-02390	4	11
196440-04310	12	19
196630-12980	6	12
22137-080000	10	11
	36	26
	38	15
		16
	39	4
22137-100000	36	27
22157-080000	37	5
	38	9
	39	12
22190-080002	2	25
	9	8
	15	4
		6
	43	12
22190-100002	15	7
	43	17
22190-120002	24	13
		87
		88
	25	29
	43	23
22190-140002	5	14
	30	15
	43	7
22190-180002	24	14
22217-050000	32	7
22217-060000	39	43

Parts No.	Fig. No.	Ref. No.
22217-080000	5	15
	32	8
	39	5
22217-100000	5	16
22217-120000	4	12
22217-140000	24	74
22242-000100	32	6
22252-000260	13	8
22312-050140	24	78
22351-030010	12	8
22351-050010	24	63
22351-060012	7	21
22414-250150	32	9
22512-070140	11	8
	12	6
22724-800380	35	26
22857-500100	8	11
		12
23000-013000	26	6
	29	11
	30	16
23000-016000	29	7
		7 -1
23000-022000	19	14
23000-048000	9	20
23000-060000	9	19
		19 -1
		23
23010-013000	18	27
23010-014000	31	5
23061-070300	14	31
	18	20
23072-101000	21	12
23080-015000	14	18
		23
23080-018000	14	19
23414-080000	32	10
	43	24
23414-100000	9	4
	43	10
23414-140000	5	3
23414-170000	18	15
23857-030000	15	5
23857-060000	24	54
23857-080000	5	17
	30	17
23875-010000	39	20
23875-030000	17	21
	39	42
23876-030000	2	4

Parts No.	Fig. No.	Ref. No.
23876-040000	2	5
23887-100002	9	5
23887-120002	24	15
	25	31
23887-140002	5	4
23887-180002	39	22
23893-030002	18	16
23894-030002	18	16 -1
24311-000060	21	11
24311-000070	24	43
24311-000120	8	16
	30	34
	43	9
24311-000320	2	23
	8	14
	43	5
24341-000240	2	29
	43	6
24356-010180	24	41
24356-010200	24	40
		70
24356-190180	24	41 -1
24356-190200	24	40 -1
		71 B
24358-240310	17	5
24372-000150	24	71
25132-003800	38	17
25152-004300	17	24
26013-080142	12	27
26013-080652	17	35
26106-060082	39	44
26106-060102	17	22
	24	39
	25	33
	39	14
26106-060122	26	7
26106-060142	25	48
		49
26106-060162	2	30
	39	15
26106-060202	17	8
	25	50
26106-080122	9	9
	19	6
		22
		29
	32	15
26106-080142	11	16
26106-080162	2	26
		31

Parts No.	Fig. No.	Ref. No.
26106-080162	5	9
		18
	7	39
		40
	9	21
	12	18
		22
	16	30
	19	7
	24	117
	39	6
26106-080202	9	10
	12	20 -1
	14	27
	16	23
	24	118
	33	15
	39	16
26106-080222	12	20
26106-080252	5	7
	7	35
	12	24
	16	27
	17	29
	29	4
	32	11
	36	28
	38	19
26106-080302	30	18
26106-080352	3	10
	7	23
	9	13
	14	32
	17	30
26106-080402	11	13
26106-080452	5	8
26106-080502	5	21
	7	36
26106-080552	2	32
	17	23
		36
26106-080702	26	8
26106-080852	2	22 -1
26106-081002	18	21
26106-100122	5	19
26106-100162	5	19 -1
26106-100222	4	5
26106-100252	29	5
26106-100302	30	19
	38	18

Parts No. Index

Parts No.	Fig. No.	Ref. No.
26106-100302	38	20
26106-100322	34	9
		16
		19
		25
26116-060162	17	9
26116-080302	21	14
26116-080904	38	21
26116-120252	4	6
26116-120302	35	24
26206-100252	3	3
26206-100302	3	4
26226-080182	7	29
26306-080002	2	27
	16	20
	37	6
	38	10
		22
26366-060002	15	8
26366-080002	5	20
	18	22
	19	23
		30
	26	9
	30	20
	32	12
	33	16
26366-100002	30	21
26450-080162	18	17 B
26450-080282	34	20
26450-080302	34	20 -1
26450-080452	24	34
26450-120402	34	24
26476-060142	9	6
26557-050202	32	13
26577-060142	17	10
26664-080002	21	7
26703-080002	10	3
		8
	21	15
26706-100002	34	10
		17
		21
		26
26716-120002	4	13
	42	12
26756-060002	25	34
26756-080002	34	11
	35	28
26776-140002	24	79

Parts No.	Fig. No.	Ref. No.
27241-120000	1	12
27241-300000	1	13
27241-400000	7	9
27310-080001	7	14
27730-301400	32	18 -1
29622-250001	39	33 -1
		38 -1
41650-502320	30	32
41710-000380	32	18
41710-000410	32	17
41730-000681	32	20
43530-500570	19	31
43662-025030	19	32
43662-025031	19	32 -1
43720-001220	14	29
48110-028071	34	4
48110-030061	34	6
48110-032065	34	7
48110-032411	34	12
48110-032502	34	5
48110-034071	34	8
729008-53100	27	1
729402-14580	11	3
729402-23100	13	9
729602-01560	1	1
729670-51320	24	1
729670-92600	43	1
796440-08630	4	9
83213-003012	31	7
977780-01200	23	1
977780-01210	22	1
977780-01211	22	1 -1
	23	1 -1
	46	1
977780-01230	22	2
	23	2
977780-01240	23	3
977780-01250	22	3
977780-03000	22	9
	23	9
	46	9
X00190001	16	13
X00370017	16	16
X00371040	16	19
X0044021509	22	7
	23	7
	46	7
X0146531	16	4
X02230015	16	12
X02233001	16	14

Parts No.	Fig. No.	Ref. No.
X0300120414	30	8
X0311121522	30	6
X0313080110	30	12
X0313080922	30	12 -1
X0314080110	30	10
X0318101004	46	2
X03431483	16	10
X0580121073	30	7
X0582810173	30	5
X0588080273	30	11
X0600160122	30	9
X0993070671	30	12 A
X0993071171	30	12 A-1
X158606410X	46	3
X179100011X	23	5
X179100021X	22	5
X179100022X	46	5
X179100100X	22	6
	23	6
	46	6
X199903800X	22	8
	23	8
X199906101X	46	8
X2114535200	35	12
X2740134001	30	3
X2740134002	30	3 -1
X6303BM0000	36	18
X8636008003	22	4
	23	4
X8636015001	46	4
XL150M14041	36	17
XL155G1330	36	8
XL180120000	36	4
XL1808320	36	13
XL180G13012	36	6
XL180G43150	36	7
XL180G61000	36	2
XL180G63006	36	5
XL180G85001	36	22
XL225431800	36	11
XL225G1325	36	9
XL235340110	36	16
XTST25S001	21	2
XTST25S002	21	3
XTST25S003	21	4
XTST25S004	21	5
XTST25S005	21	6
XTST25S007	21	8
XTST25S008	21	9
XTST25S009	21	10

Parts No.	Fig. No.	Ref. No.