YANMAR

PARTS CATALOG

0CR10-M35102EN

Last update Sep., 2018

Introduction

1. This parts catalog for 4JH2E, 4JH2-TE, 4JH2-HTE, 4JH2-DTE, 4JH2-UTE is published as a revised edition of the Diesel engine.

	Parts catalog No.	Date of issue	Remarks
1st revised edition	000Y00R3511	Apr.,1989	No need
2nd revised edition	000Y00R3512	June,1991	

2. Standard finish color. Yanmar ecole silver Metallic

Parts No.	977620-10070	1L(Packed in a can)
Parts No.	977620-40070	4L(Packed in a can)
Parts No.	TOR-90090003	Spray(1 piece)

3. This parts catalog dose not contain the technical data needed for maintenance service.

4. The illustrations used in this parts catalog have been simplified for clarity.

5. Model code and Reduction reversing gear(clutch)

4JH2E	Q29570A	4JH2E	KBW20
		4JH2BE	KM4A
		4JH2PE	KM3P2
4JH2-TE	Q29571A	4JH2-TE	KBW20
		4JH2-TBE	KM4A
4JH2-HTE	Q29572A	4JH2-HTE	KBW21
		4JH2-HTBE	KM4A
4JH2-DTE	Q29573A	4JH2-DTE	KBW21
		4JH2-DTBE	KM4A
4JH2-UTE	129574A	4JH2-UTE	KBW21
		4JH2-UTBE	KM4A

6. The contents of this parts catalog are subject to change without notice.

7. Be sure to use only Yanmar genuine part for repairs. If imitation parts are used, it may cause engine defects.

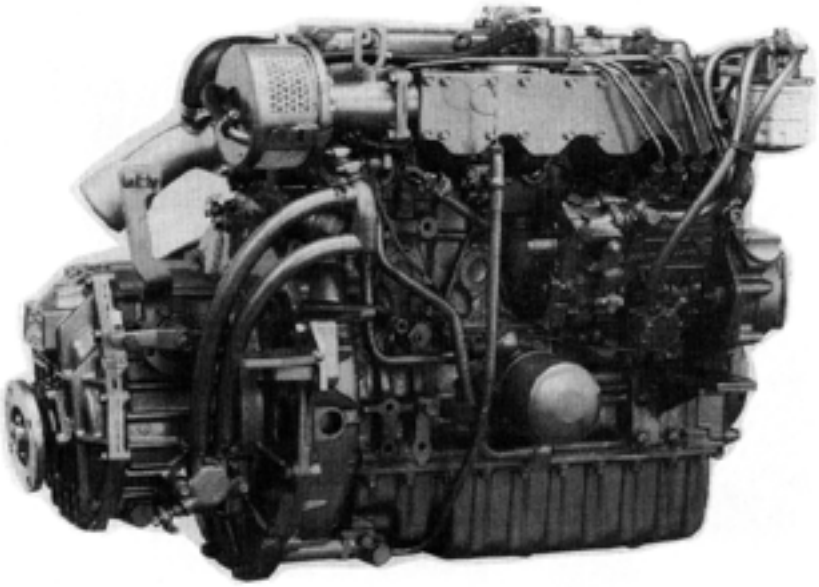

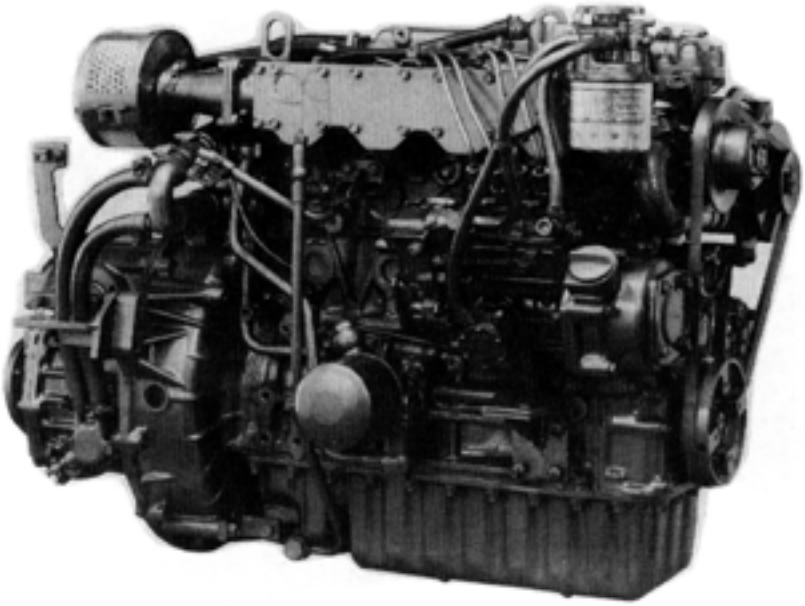

MODEL 4 JH2E

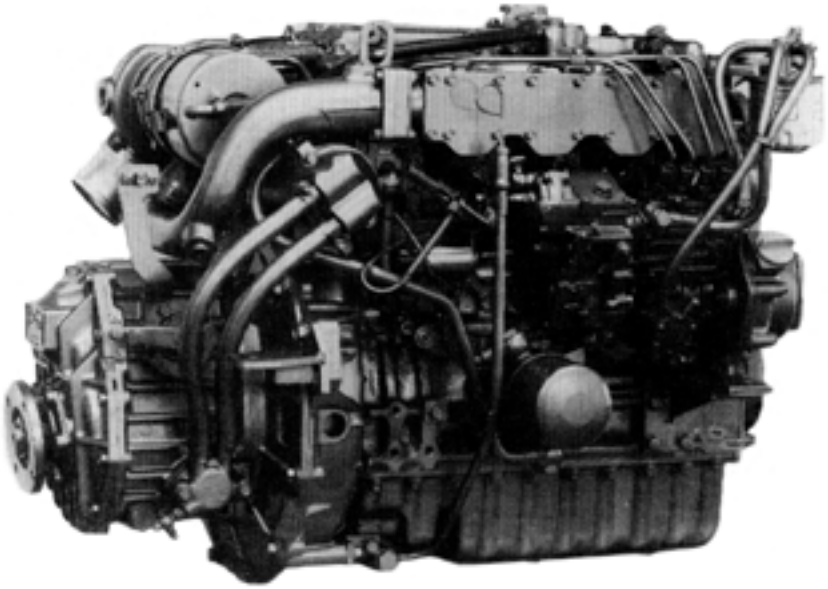

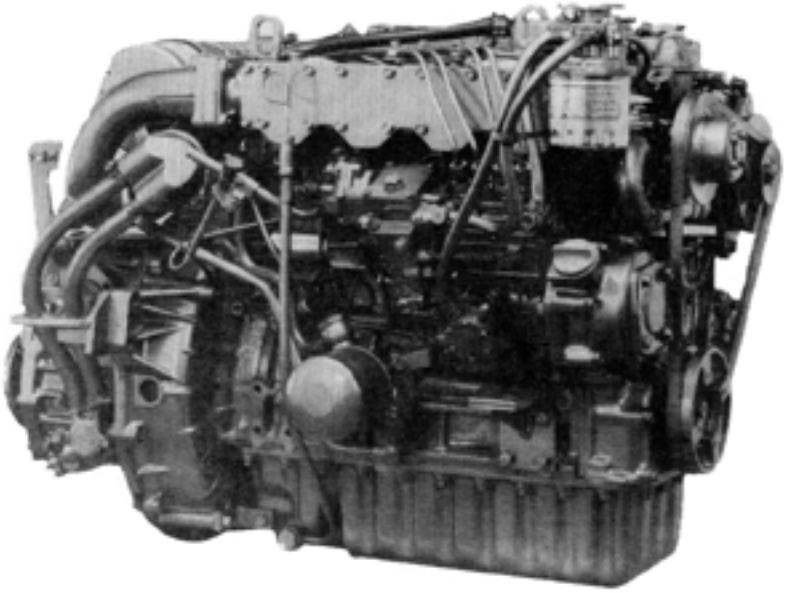

MODEL 4 JH2-TE

MODEL

4JH2-HTE
4JH2-DTE

Contents

Fig. No.	Fig. Name
4JH2BE(T,HT,DT,UT)	
1.	CYLINDER BLOCK
2.	GEAR HOUSING
3.	FLYWHEEL HOUSING
4.	LUB. OIL SUMP
5.	LABEL
6.	MOUNTING FOOT
7.	CYLINDER HEAD
8.	BONNET & BREATHER
9.	SUCTION MANIFOLD(4JH2E)
10.	SUCTION MANIFOLD(4JH2-TE)
11.	SUCTION MANIFOLD(4JH2-HTE,DTE,UTE)
12.	CAMSHAFT & DRIVING GEAR
13.	MIXING ELBOW
14.	TURBINE
15.	INTER COOLER(4JH2-HTE)
16.	INTER COOLER(4JH2-DTE,UTE)
17.	CRANKSHAFT & FLYWHEEL
18.	PISTON & CONNECTING ROD
19.	LUB.OIL COOLER
20.	LUB. OIL SYSTEM
21.	LUB. OIL PIPE
22.	COOLING SEA WATER PUMP
23.	COOLING FRESH WATER PUMP
24.	COOLING FRESH WATER COOLER
25.	COOLING SEA WATER PIPE(4JH2-HTE,DTE,UTE)
26.	COOLING SEA WATER PIPE(4JH2E)
27.	COOLING SEA WATER PIPE(4JH2-TE)
28.	COOLING FRESH WATER PIPE
29.	FUEL INJECTION PUMP(4JH2-TE,HTE,DTE)
30.	FUEL INJECTION PUMP(4JH2E)
31.	FUEL INJECTION PUMP(4JH2-UTE)
32.	FUEL INJECTION PIPE(4JH2-E,TE,HTE,DTE)
33.	FUEL INJECTION PIPE(4JH2-UTE)
34.	TIMER(4JH2-E,DTE)
35.	FUEL PIPE(4JH2-E,TE,HTE,DTE)
36.	FUEL PIPE(4JH2-UTE)
37.	GOVERNOR(4JH2-TE,HTE,DTE)
38.	GOVERNOR(4JH2E)
39.	ENGINE STOP & COLD START DEVICE
40.	SPEED REMOTE CONTROL DEVICE
41.	STARTING MOTOR
42.	GENERATOR
43.	CLUTCH REMOTE CONTROL(KBW20 & KBW21)
44.	WIRE HARNESS & SENSOR(4JH2-UTE)
45.	TOOL
46.	SPARE PART
47.	GENERATOR
48.	MIXING ELBOW
49.	ELECTRIC BILGE PUMP(12V)

Contents

Fig. No.	Fig. Name
50.	SEA WATER FILTER
51.	FUEL TANK
52.	ENGINE STOP DEVICE
53.	WIRE HARNESS & SENSOR(B-2 TYPE)
54.	WIRE HARNESS & SENSOR(C,D,E TYPE)
55.	COUPLING
56.	SINGLE LEVER CONTROL
57.	INSTRUMENT PANEL(B-2 TYPE)
93.	(57A)INSTRUMENT PANEL(B-TYPE,NEW)
58.	INSTRUMENT PANEL(C-TYPE)
94.	(58A)INSTRUMENT PANEL(C-TYPE,NEW)
59.	INSTRUMENT PANEL(D-TYPE)
95.	(59A)INSTRUMENT PANEL(D-TYPE,NEW)
60.	INSTRUMENT PANEL(E-TYPE)
61.	REPAIR SET
62.	GASKET SET
63.	REEQUIP MENT KIT
64.	CLUTCH ASSY(KM4A)
73.	CLUTCH ASSY(KBW20)
80.	CLUTCH ASSY(KBW21)

KM3P2

Fig. No.	Fig. Name
87.	CLUTCH ASSY(KM3P2)
88.	CLUTCH HOUSING
89.	INPUT SHAFT & COUNTER SHAFT
90.	OUTPUT SHAFT
91.	CONTROL DEVICE
92.	TOOL(OPTIONAL)

Fig.1. CYLINDER BLOCK

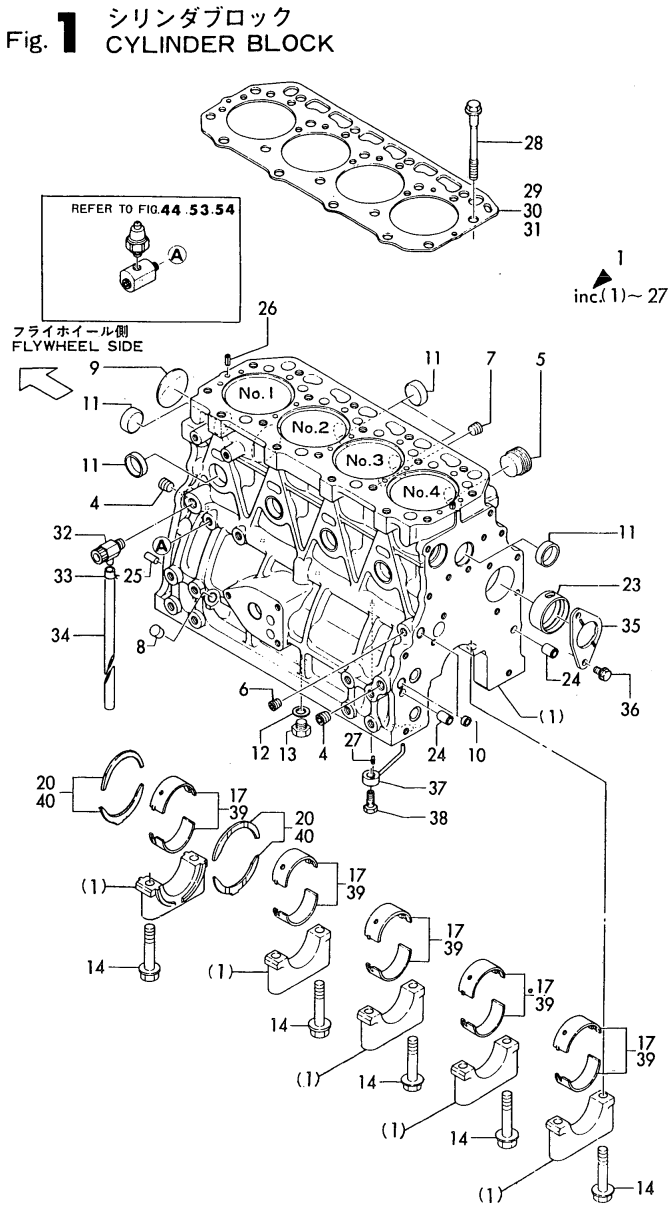

Remarks
1) STANDARD
2) ADJUSTMENT
3) UNDER-SIZED METAL(0.25)
4) OVER-SIZED METAL(0.25)

(A)=4JH2E
(B)=4JH2-TE
(C)=4JH2-HTE
(D)=4JH2-DTE
(E)=4JH2-UTE(B)
(F)=

No.	Lev.	Parts No.	Description	Q'ty (A)	(B)	(C)	(D)	(E)	(F)	I	R
1	1	729573-01560	BLOCK ASSY, CYLINDER	1	1	1	1	1			
4	3	124160-01910	PLUG, PT1/4	2	2	2	2	2			
5	3	171051-01921	PLUG, NPTF1	1	1	1	1	1			
6	3	23871-010000	PLUG, R01	1	1	1	1	1			
7	3	23871-030000	PLUG, R03	1	1	1	1	1			
8	3	27225-100140	PLUG, 10X14	1	1	1	1	1			
9	3	27231-500000	PLUG 50	1	1	1	1	1			
10	3	27241-120000	PLUG, 12	2	2	2	2	2			
11	3	27241-300000	PLUG 30	8	8	8	8	8			
12	2	23414-120000	GASKET, 12X1.0	1	1	1	1	1			
13	2	23887-120002	PLUG, 12	1	1	1	1	1			
14	2	129150-02020	BOLT, METAL CAP	10	10	10	10	10			
17	2	129150-02800	BEARING, MAIN	5	5	5	5	5			
20	2	129150-02930	BEARING, THRUST	2	2	2	2	2			
23	2	129795-02411	BUSH, CAMSHAFT	1	1	1	1	1			
24	2	129795-01950	PIPE, KNOCK L=18	2	2	2	2	2			
25	2	22312-080160	PIN, PARALLEL M8X16	2	2	2	2	2			
26	2	22351-060012	PIN, SPRING 6.0X12	2	2	2	2	2			
27	2	22351-030010	PIN, SPRING 3.0X10	4	4	4	4	4			
28	1	129150-01200	BOLT, HEAD	18	18	18	18	18			
29	1	129573-01341	GASKET, HEAD T=1.3	1	1	1	1	1			2
30	1	129573-01351	GASKET, HEAD	1	1	1	1	1			1
31	1	129573-01361	GASKET, HEAD T=1.5	1	1	1	1	1			2
32	1	128371-01800	COCK ASSY, 1/4	1	1	1	1	1			
33	1	124460-77680	RETAINER	1	1	1	1	1			
34	1	23061-070300	PIPE, 7X 300	1	1	1	1	1			
35	1	129150-02450	BEARING, THRUST	1	1	1	1	1			
36	1	26106-080162	BOLT, M8X 16 PLATED	2	2	2	2	2			
37	1	129553-39650	NOZZLE	4	4	4	4	4			
38	1	23857-030000	BOLT, JOINT 3	4	4	4	4	4			
39	1	129150-02870	BEARING, 0.25 US	5	5	5	5	5			3
40	1	129150-02940	BEARING, THRUST 0.25	2	2	2	2	2			4

N:Old $\xleftrightarrow[\text{No}]{\text{Yes}}$ New, Q:Old $\xleftrightarrow[\text{Yes}]{\text{No}}$ New, R:Old $\xleftrightarrow[\text{Yes}]{\text{Yes}}$ New, S:Old $\xleftrightarrow[\text{No}]{\text{No}}$ New, W:Add, Z:Discontinued, F:Interchangeable by set, K:Q'ty Change

Copyright (C) YANMAR CO., LTD. All RightsReserved.

Fig.2. GEAR HOUSING

Fig. 2 ギヤケース GEAR HOUSING

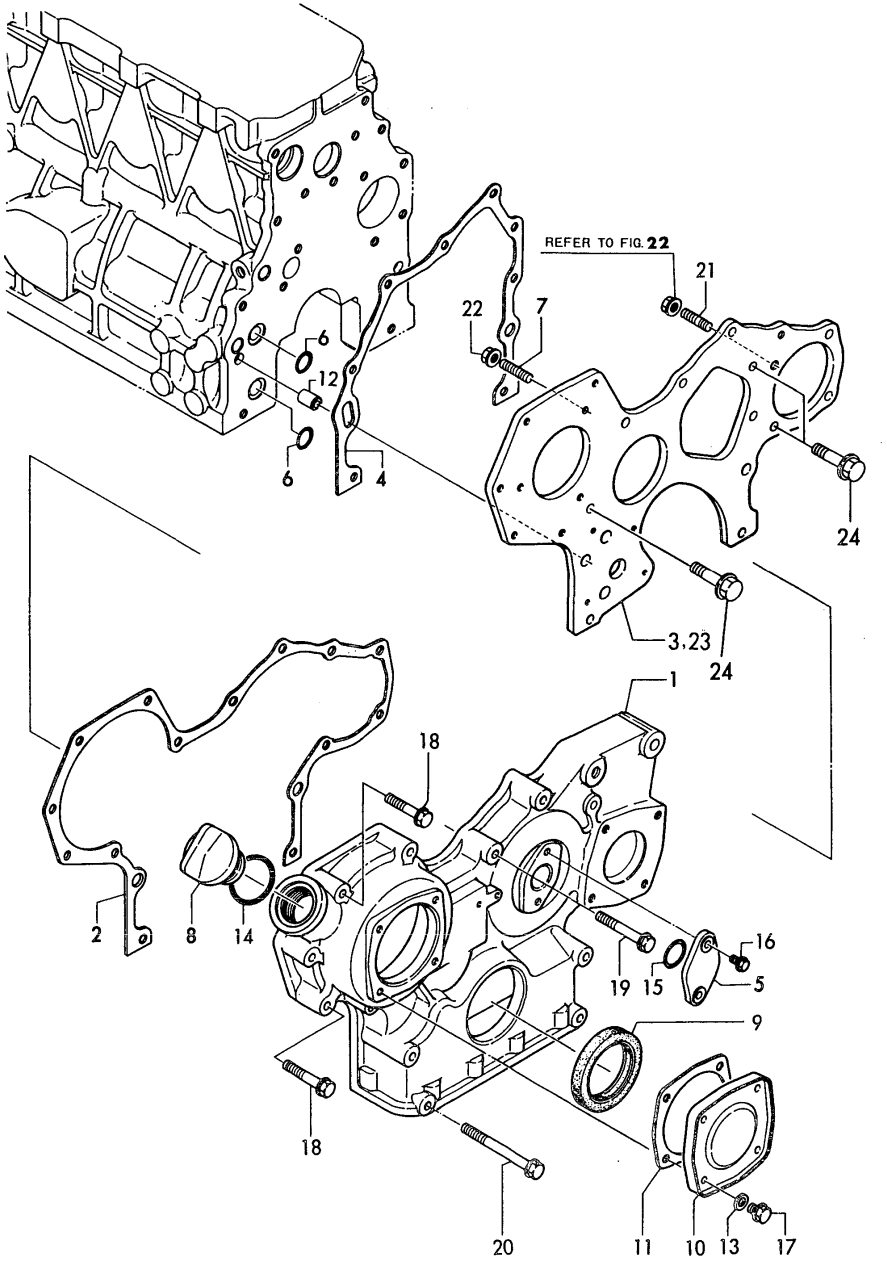

(A)=4JH2E (D)=4JH2-DTE
(B)=4JH2-TE (E)=4JH2-UTE(B)
(C)=4JH2-HTE (F)=

No.	Lev.	Parts No.	Description	Q'ty (A)	(B)	(C)	(D)	(E)	(F)	I	R
1	1	129470-01501	CASE, GEAR	1	1	1	1	1			
2	1	129150-01510	GASKET, GEAR CASE				1				
2-1	1	129470-01510	GASKET, GEAR CASE	1	1	1	1	1		N	
			(D=E31928)								
3	1	129150-01520	FLANGE, GEAR CASE	1	1	1	1				
4	1	129150-01530	GASKET, GEAR CASE				1				
4-1	1	129470-01530	GASKET	1	1	1	1	1		N	
			(D=E31928)								
5	1	121023-01550	COVER	1	1	1	1	1			
6	1	129470-01550	O-RING	2	2	2	2	2			
7	1	121450-01560	STUD, M8X22	3	3	3	3				
8	1	124160-01751	COVER, FILLER	1	1	1	1	1			
9	1	129795-01800	SEAL, OIL	1	1	1	1	1			
10	1	129150-01870	COVER	1	1	1	1	1			
11	1	129150-01880	GASKET				1				
11-1	1	129470-01880	GASKET, GEAR CASE	1	1	1	1	1		N	
			(D=E31928)								
11-2	1	129150-01881	GASKET	1	1	1	1	1		R	
	(A=*1991.01)	(B=*1991.01)	(C=*1991.01) (D=*1991.01)	(E=*1991.01)							
11-3	1	129C26-01890	GASKET, HO-P	1	1	1	1	1		R	
	(A=EXXXXX)	(B=EXXXXX)	(C=EXXXXX) (D=EXXXXX)	(E=EXXXXX)							
12	1	129795-01950	PIPE, KNOCK L=18	2	2	2	2	2			
13	1	23414-080000	GASKET, 8X1.0	4	4	4	4	4			
14	1	24311-000320	O-RING, 1AP32.0	1	1	1	1	1			
15	1	24341-000260	O-RING, 1AS26.0	1	1	1	1	1			
16	1	26106-060162	BOLT, M6X 16 PLATED	2	2	2	2	2			
17	1	26106-080122	BOLT, M8X 12 PLATED	4	4	4	4	4			
18	1	26106-080452	BOLT, M8X 45 PLATED	6	6	6	6	6			
19	1	26106-080552	BOLT, M8X 55 PLATED	3	3	3	3	3			
20	1	26106-080852	BOLT, M8X 85 PLATED	4	4	4	4	4			
21	1	26216-080182	STUD, M8X 18	1	1	1	1	1			
22	1	26366-080002	NUT, M8	3	3	3	3				
23	1	129574-01520	FLANGE, GEAR CASE					1			
24	1	26106-080162	BOLT, M8X 16 PLATED	3	3	3	3	3		W	
	(A=EXXX)	(B=EXXX)	(C=EXXX) (D=EXXX)	(E=EXXX)							

N:Old $\xleftarrow[\text{No}]{\text{Yes}}$ New, Q:Old $\xleftarrow[\text{Yes}]{\text{No}}$ New, R:Old $\xleftarrow[\text{Yes}]{\text{Yes}}$ New, S:Old $\xleftarrow[\text{No}]{\text{No}}$ New, W:Add, Z:Discontinued, F:Interchangeable by set, K:Q'ty Change

Copyright (C) YANMAR CO., LTD. All RightsReserved.

Fig.3. FLYWHEEL HOUSING

Fig. 3 フライホイールハウジング FLYWHEEL HOUSING

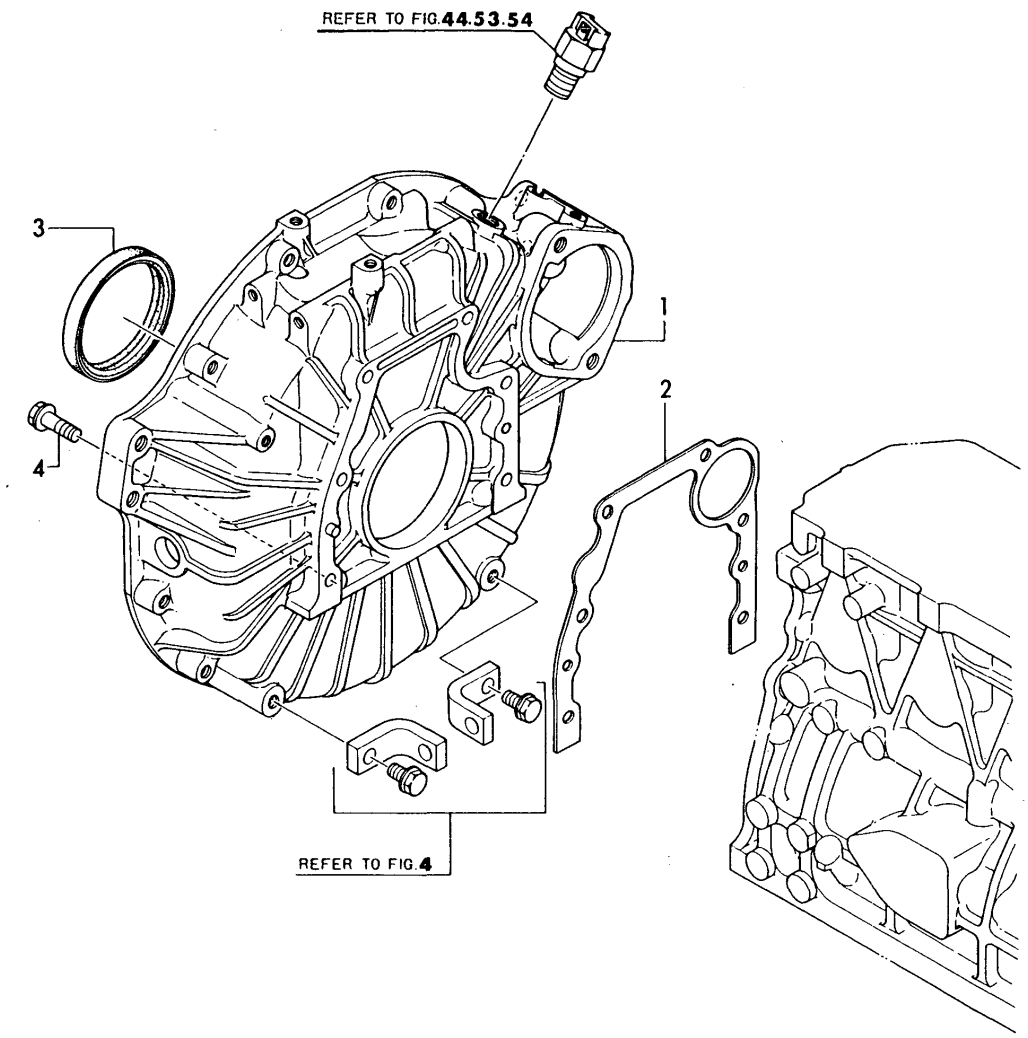

(A)=4JH2E (D)=4JH2-DTE
(B)=4JH2-TE (E)=4JH2-UTE(B)
(C)=4JH2-HTE (F)=

No.	Lev.	Parts No.	Description	Q'ty (A)	(B)	(C)	(D)	(E)	(F)	I	R
1	1	129400-01600	HOUSING, FLYWHEEL	1	1	1	1	1			
2	1	129100-01620	GASKET				1				
2-1	1	129470-01620	GASKET	1	1	1	1	1		N	
			(D=E31928)								
3	1	129795-01780	SEAL, OIL	1	1	1	1	1			
4	1	26106-100302	BOLT, M10X 30 PLATED	6	6	6	6	6			

N:Old ◄Yes/No► New, Q:Old ◄No/Yes► New, R:Old ◄Yes/Yes► New, S:Old ◄No/No► New, W:Add, Z:Discontinued, F:Interchangeable by set, K:Q'ty Change

Copyright (C) YANMAR CO., LTD. All RightsReserved.

Fig.4. LUB. OIL SUMP

Fig.4 オイルパン LUB. OIL SUMP

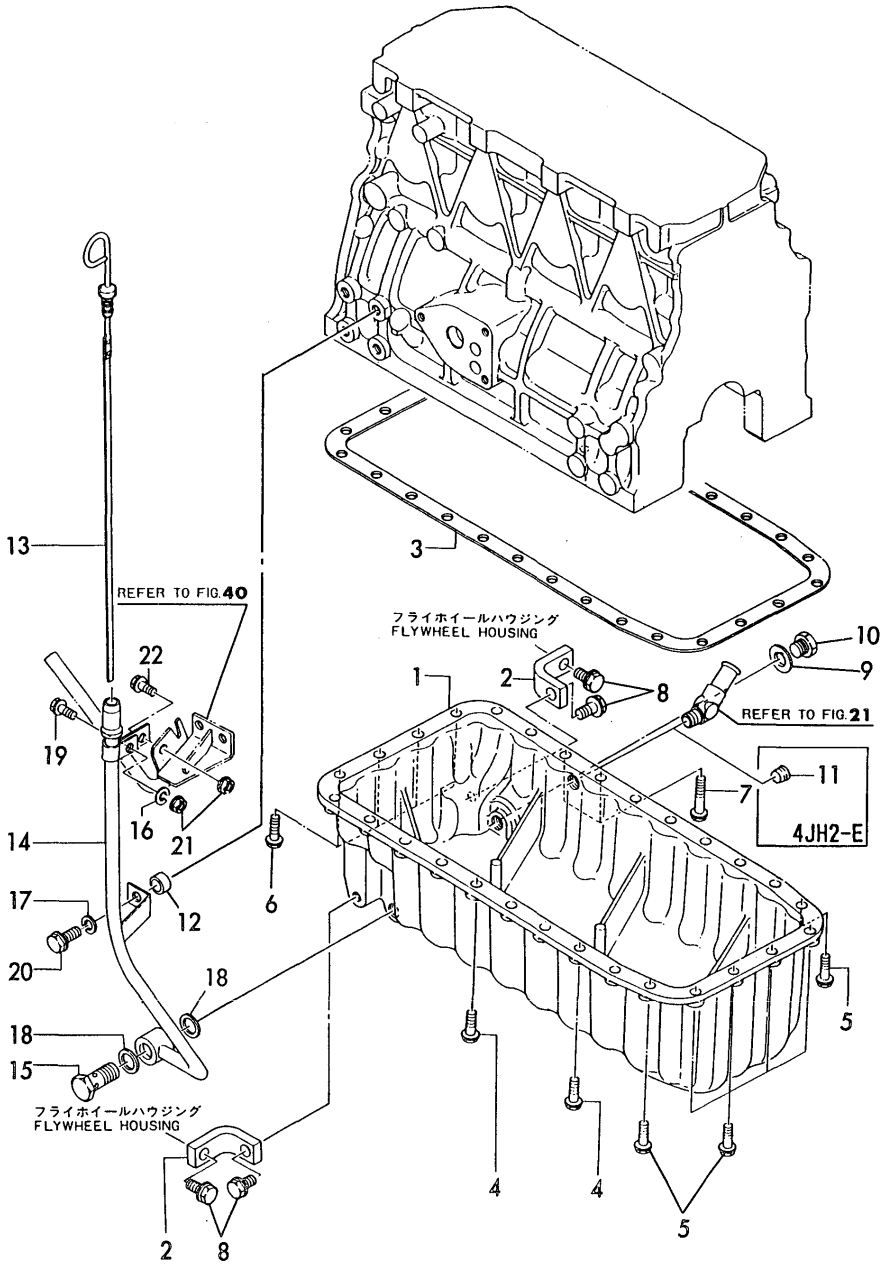

(A)=4JH2E (D)=4JH2-DTE
(B)=4JH2-TE (E)=4JH2-UTE(B)
(C)=4JH2-HTE (F)=

No.	Lev.	Parts No.	Description	Q'ty (A)	(B)	(C)	(D)	(E)	(F)	I	R
1	1	129473-01700	SUMP, OIL	1	1	1	1	1			
2	1	129470-01710	BRACKET	2	2	2	2	2			
3	1	129400-01750	GASKET, OIL SUMP				1				
3-1	1	129470-01750	GASKET, OIL SUMP (D=E31928)	1	1	1	1	1		N	
4	1	26106-080252	BOLT, M8X 25 PLATED	16	16	16	16	16			
5	1	26106-080252	BOLT, M8X 25 PLATED	6	6	6	6	6			
6	1	26106-080252	BOLT, M8X 25 PLATED	4	4	4	4	4			
7	1	26106-080402	BOLT, M8X 40 PLATED	2	2	2	2	2			
8	1	26106-100252	BOLT, M10X 25 PLATED	4	4	4	4	4			
9	1	23414-160021	GASKET, 16X1.0 (D=E31928)	1	1	1	1	1		W	
10	1	23887-160002	PLUG, 16 (D=E31928)	1	1	1	1	1		W	
11	1	23871-030000	PLUG, R03	1							
12	1	129301-34830	SPACER	1	1	1	1	1			
13	1	129473-34850	DIPSTICK, OIL	1	1	1	1	1			
14	1	129473-34861	GUIDE, DIPSTICK	1	1	1	1	1			
14-1	1	129473-34880	GUIDE ASSY, DIPSTICK	1	1	1	1	1		R	
	(A=*1990.11)	(B=*1990.11)	(C=*1990.11) (D=*1990.11)	(E=*1990.11)							
15	1	104214-39720	BOLT	1	1	1	1	1			
16	1	22217-080000	WASHER, SPRING 8	1	1	1	1	1			
17	1	22217-100000	WASHER, SPRING 10	1	1	1	1	1			
18	1	23414-160000	GASKET, 16X1.0	2	2	2	2	2			
19	1	26106-080162	BOLT, M8X 16 PLATED	1	1	1	1	1			
20	1	26106-100252	BOLT, M10X 25 PLATED	1	1	1	1	1			
21	1	26366-080002	NUT, M8	2	2	2	2	2			
22	1	26106-080122	BOLT, M8X 12 PLATED	1	1	1	1	1			

N:Old ←Yes/No→ New, Q:Old ←No/Yes→ New, R:Old ←Yes/Yes→ New, S:Old ←No/No→ New, W:Add, Z:Discontinued, F:Interchangeable by set, K:Q'ty Change

Copyright (C) YANMAR CO., LTD. All RightsReserved.

Fig.5. LABEL

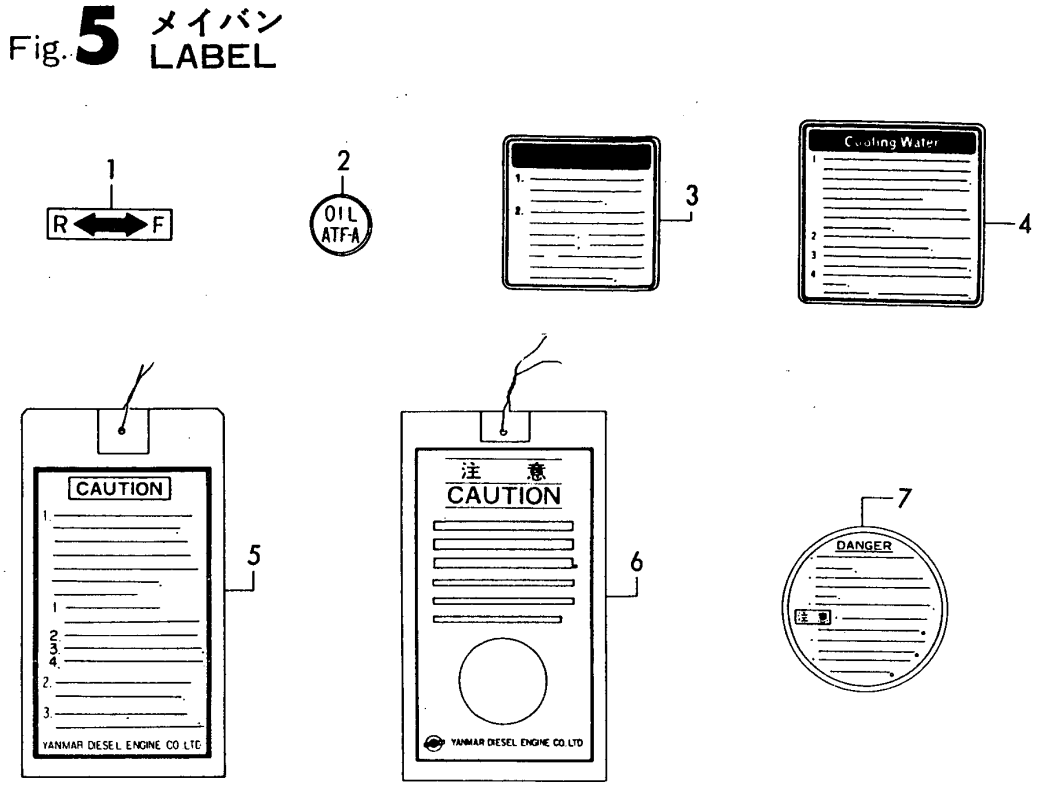

(A)=4JH2E (D)=4JH2-DTE
(B)=4JH2-TE (E)=4JH2-UTE(B)
(C)=4JH2-HTE (F)=

No.	Lev.	Parts No.	Description	Q'ty (A)	(B)	(C)	(D)	(E)	(F)	I	R
1	1	177088-02430	LABEL	1	1	1	1	1			
2	1	177075-02550	LABEL	1	1	1	1	1			
3	1	135665-07210	LABEL, WATER PUMP	1	1	1	1	1			
4	1	127611-07350	LABEL	1	1	1	1	1			
4-1	1	129198-07350	LABEL	1	1	1	1	1		N	
	(A=*1989.10)	(B=*1989.10)	(C=*1989.10) (D=*1989.10)	(E=*1989.10)							
5	1	126630-07370	LABEL	1	1	1	1	1			
6	1	123682-07850	LABEL, CAUTION	1	1	1	1	1			
7	1	120445-44620	LABEL, CAUTION	1	1	1	1	1			
17	1	129570-07500	LABEL, BSO	1						W	
	(A=E07330)										
17-1	1	129570-07501	LABEL	1						S	
	(A=E09284)										
18	1	129571-07500	LABEL,BSO		1					W	
		(B=E14398)									
18-1	1	129571-07501	LABEL		1					S	
		(B=E15060)									
19	1	129572-07500	LABEL, BSO			1				W	
			(C=E23324)								
19-1	1	129572-07501	LABEL			1				S	
			(C=E23721)								
20	1	129573-07500	LABEL, BSO				1			W	
			(D=E34692)								
20-1	1	129573-07501	LABEL				1			S	
			(D=E35651)								
21	1	129574-07500	LABEL,BSO					1		W	
				(E=E40779)							
21-1	1	129574-07501	LABEL					1		S	
				(E=E41481)							

N:Old $\xleftarrow[\text{No}]{\text{Yes}}$ New, Q:Old $\xleftarrow[\text{Yes}]{\text{No}}$ New, R:Old $\xleftarrow[\text{Yes}]{\text{Yes}}$ New, S:Old $\xleftarrow[\text{No}]{\text{No}}$ New, W:Add, Z:Discontinued, F:Interchangeable by set, K:Q'ty Change

Copyright (C) YANMAR CO., LTD. All RightsReserved.

Fig.6. MOUNTING FOOT

P/C NEWS No:Y00R3512-9
PUBLISHED:2002/2

Fig.6 マウンティングフート
MOUNTING FOOT

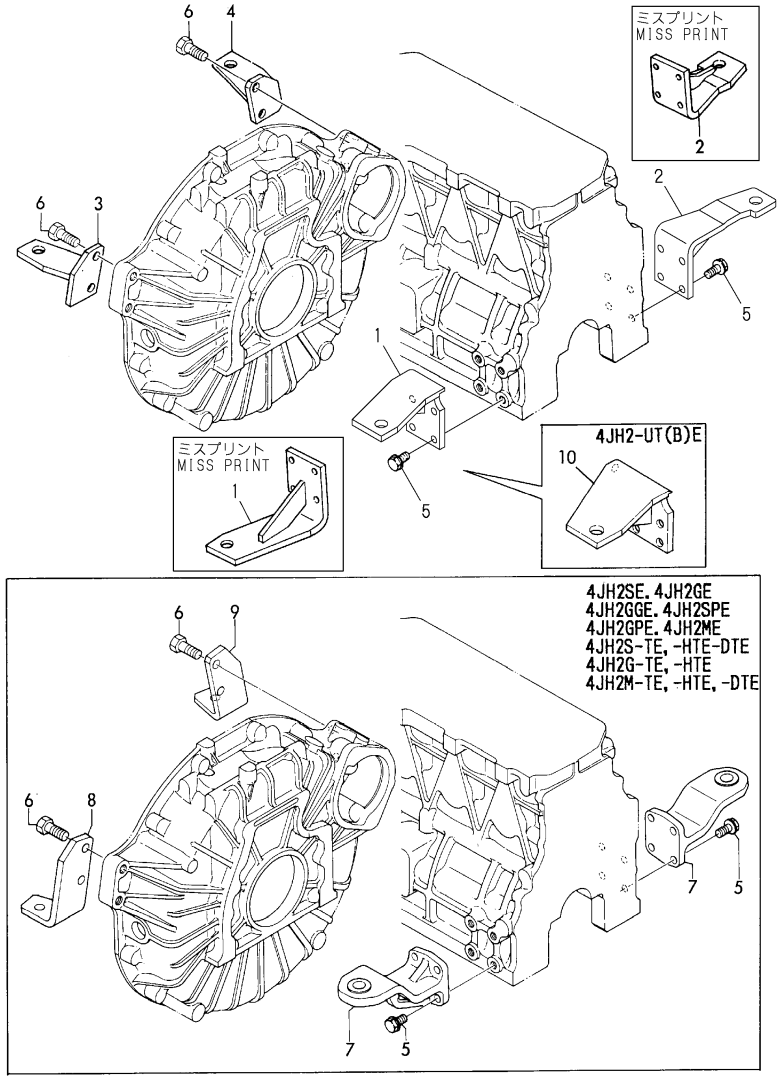

(A)=4JH2E (D)=4JH2-DTE
(B)=4JH2-TE (E)=4JH2-UTE(B)
(C)=4JH2-HTE (F)=

No.	Lev.	Parts No.	Description	Q'ty (A)	(B)	(C)	(D)	(E)	(F)	I	R
1	1	129473-08100	FOOT	1	1	1	1				
2	1	129473-08110	FOOT	1	1	1	1	1			
3	1	129473-08120	FOOT	1	1	1	1	1			
4	1	129473-08130	FOOT	1	1	1	1	1			
5	1	26106-100202	BOLT, M10X 20 PLATED	8	8	8	8	8			
6	1	26116-120302	BOLT, M12X 30 PLATED	4	4	4	4	4			
7	1	129470-08100	FOOT	2	2	2	2				1
8	1	129470-08110	FOOT	1	1	1	1				1
9	1	129470-08120	FOOT	1	1	1	1				1
10	1	129574-08100	FOOT					1			

N:Old $\xleftarrow[\text{No}]{\text{Yes}}$ New, Q:Old $\xleftarrow[\text{Yes}]{\text{No}}$ New, R:Old $\xleftarrow[\text{Yes}]{\text{Yes}}$ New, S:Old $\xleftarrow[\text{No}]{\text{No}}$ New, W:Add, Z:Discontinued, F:Interchangeable by set, K:Q'ty Change

Copyright (C) YANMAR CO., LTD. All RightsReserved.

Fig.7. CYLINDER HEAD

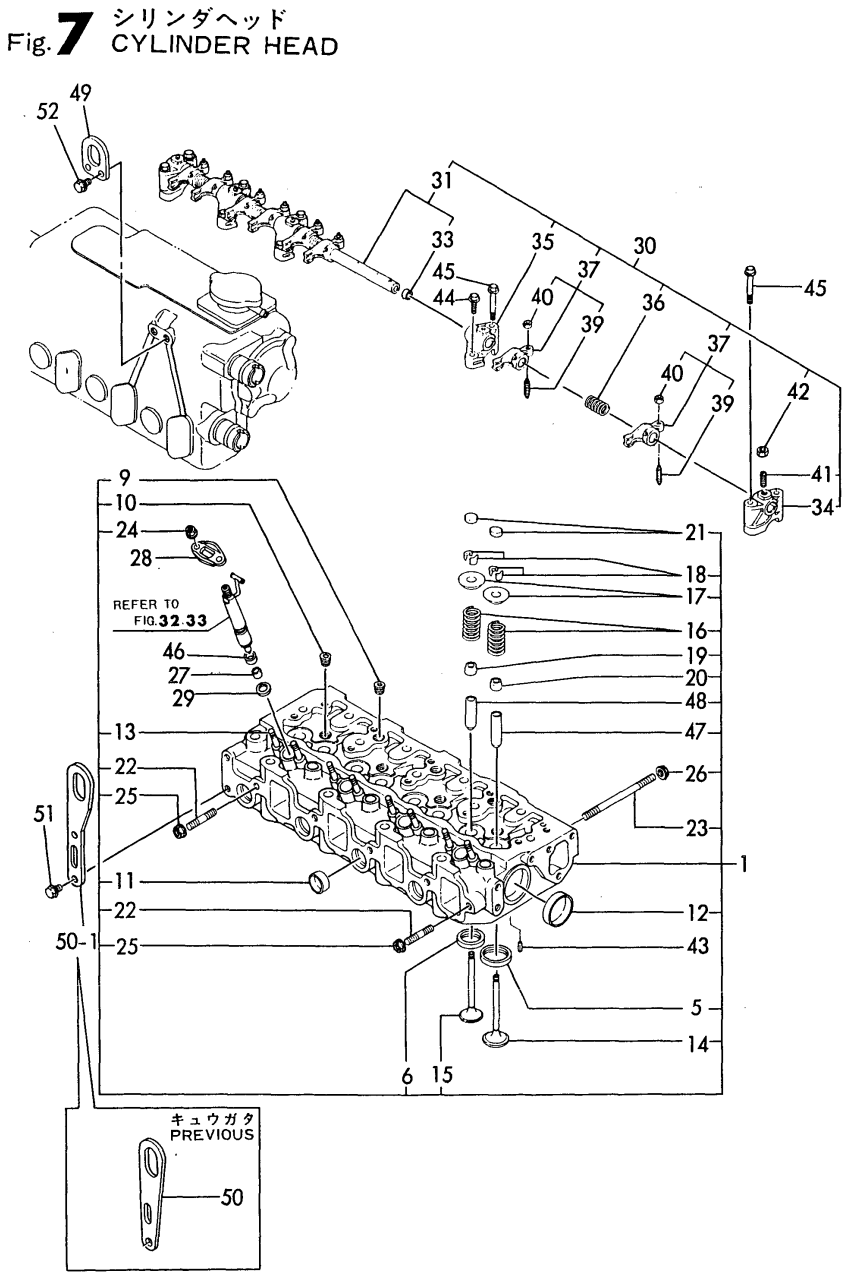

Remarks
(1) REPAIR PART

(A)=4JH2E (B)=4JH2-TE (C)=4JH2-HTE (D)=4JH2-DTE (E)=4JH2-UTE(B) (F)=

No.	Lev.	Parts No.	Description	Q'ty (A)	(B)	(C)	(D)	(E)	(F)	I	R
1A	1	729473-11700	HEAD ASSY, CYLINDER			1	1				
1B	1	729474-11701	HEAD ASSY, CYLINDER	1	1						
1C	1	729574-11700	HEAD ASSY, CYLINDER					1			
5	3	129470-11850	SEAT, EXHAUST VALVE	4	4	4	4	4			
6	3	129470-11090	SEAT, EXHAUST VALVE	4	4	4	4	4			
9	3	121850-11860	PLUG, PT1/4	3	3	3	3	3			
10	3	23871-030000	PLUG, R03	4	4	4	4	4			
11	3	27241-220000	PLUG, 22	4	4	4	4	4			
12	3	27241-400000	PLUG, 40	2	2	2	2	2			
13	3	26216-060202	STUD, M6X 20	8	8	8	8	8			
14	2	129100-11100	VALVE, INTAKE	4	4	4	4	4			
15	2	129100-11110	VALVE, EXHAUST	4	4	4	4	4			
16	2	129795-11120	SPRING, VALVE	8	8	8	8	8			
17	2	129795-11180	RETAINER, SPRING	8	8	8	8	8			
18	2	103338-11190	COTTER	8	8	8	8	8			
18-1	2	103338-11190	COTTER	16	16	16	16	16		K	
	(A=*1991.01)	(B=*1991.01)	(C=*1991.01)	(D=*1991.01)	(E=*1991.01)						
19	2	121400-11340	SEAL, VALVE STEM	4	4	4	4	4			
20	2	124460-11340	SEAL, VALVE STEM	4	4	4	4	4			
21	2	129150-11370	CAP, VALVE	8	8	8	8	8			
22	2	26216-080222	STUD, M8X 22	2	2	2	2	2			
23	2	26216-081002	STUD, M8X100	2	2	2	2	2			
24	2	26367-060002	NUT, M6	8	8	8	8	8			
25	2	26366-080002	NUT, M8	2	2	2	2	2			
26	2	26366-080002	NUT, M8	2	2	2	2	2			
27	1	119625-11870	PROTECTOR, NOZZLE	4	4	4	4	4			
28	1	119625-11900	RETAINER, NOZZLE	4	4	4	4	4			
29	1	119625-11880	SEAT, NOZZLE	4	4	4	4	4			
30	1	129555-11241	SHAFT ASSY, ROCKER	1	1	1	1	1			
31	2	129550-11290	SHAFT, ROCKER ARM	1	1	1	1	1			
33	3	27241-100000	PLUG, 10	2	2	2	2	2			
34	2	129155-11260	SUPPORT, ROCKER ARM	2	2	2	2	2			
35	2	129155-11270	SUPPORT, ROCKER ARM	3	3	3	3	3			
36	2	129150-11280	SPRING	4	4	4	4	4			
37	2	729150-11650	ARM ASSY, ROCKER	8	8	8	8	8			
37-1	2	729402-11650	ARM ASSY, ROCKER	8	8	8	8	8		N	
	(A=EXXX)	(B=EXXX)	(C=EXXX)	(D=EXXX)	(E=EXXX)						
39	3	129150-11230	SCREW, VALVE ADJUST	8	8	8	8	8			
40	3	129150-11750	NUT, M8	8	8	8	8	8			
41	2	26226-080182	STUD, M8X 18	3	3	3	3	3			
42	2	26756-080002	NUT, LOCK M8	3	3	3	3	3			
43	1	22351-060012	PIN, SPRING 6.0X12	2	2	2	2	2			
44	1	26106-080252	BOLT, M8X 25 PLATED	3	3	3	3	3			
45	1	26106-080502	BOLT, M8X 50 PLATED	7	7	7	7	7			
46	1	129470-11920	GASKET			4	4	4		W	
			(C=EXXX)	(D=EXXX)							
47	1	120130-11860	GUIDE, VALVE	4	4	4	4	4			1
48	1	129150-11810	GUIDE, VALVE	4	4	4	4	4			1
49	1	129470-07230	LIFTER	1	1	1	1	1			
50	1	124736-07900	LIFTER	1	1	1	1	1			
50-1	1	129171-07900	LIFTER	1	1	1	1	1		R	

N:Old $\xleftarrow[\text{No}]{\text{Yes}}$ New, Q:Old $\xleftarrow[\text{Yes}]{\text{No}}$ New, R:Old $\xleftarrow[\text{Yes}]{\text{Yes}}$ New, S:Old $\xleftarrow[\text{No}]{\text{No}}$ New, W:Add, Z:Discontinued, F:Interchangeable by set, K:Q'ty Change

++ CONTINUE ++

Copyright (C) YANMAR CO., LTD. All RightsReserved.

Fig.7. CYLINDER HEAD

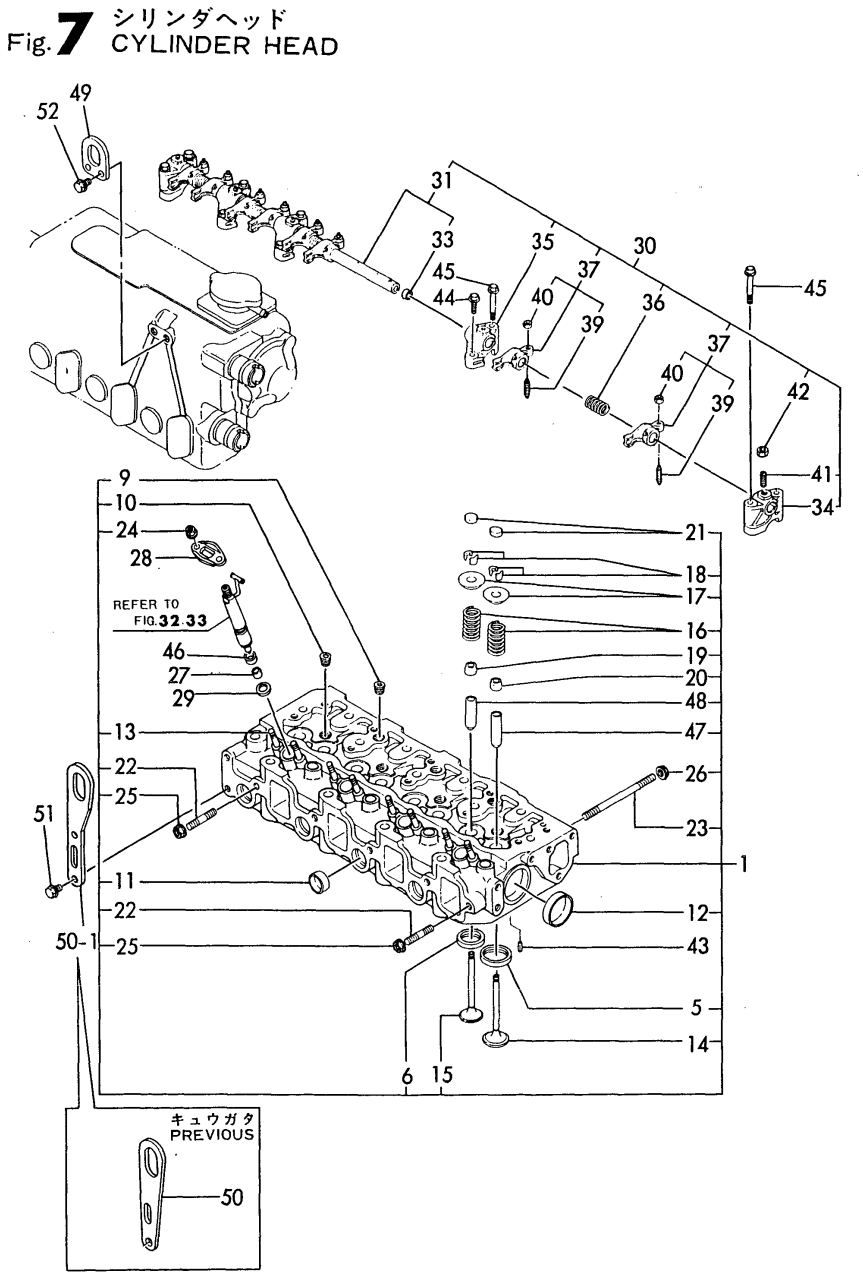

(A)=4JH2E
(B)=4JH2-TE
(C)=4JH2-HTE
(D)=4JH2-DTE
(E)=4JH2-UTE(B)
(F)=

No.	Lev.	Parts No.	Description	Q'ty (A)	(B)	(C)	(D)	(E)	(F)	I	R
		(A=*1990.12)	(B=*1990.12) (C=*19901.12) (D=*1990.12) (E=*1990.12)								
51	1	26106-080142	BOLT, M8X 14 PLATED	2	2	2	2	2			
52	1	26106-080162	BOLT, M8X 16 PLATED	2	2	2	2	2			

Remarks
(1) REPAIR PART

N:Old ←Yes/No→ New, Q:Old ←No/Yes→ New, R:Old ←Yes/Yes→ New, S:Old ←No/No→ New, W:Add, Z:Discontinued, F:Interchangeable by set, K:Q'ty Change

Copyright (C) YANMAR CO., LTD. All RightsReserved.

Fig.8. BONNET & BREATHER

Fig. 8 ボンネット＆ブリーザ
BONNET & BREATHER

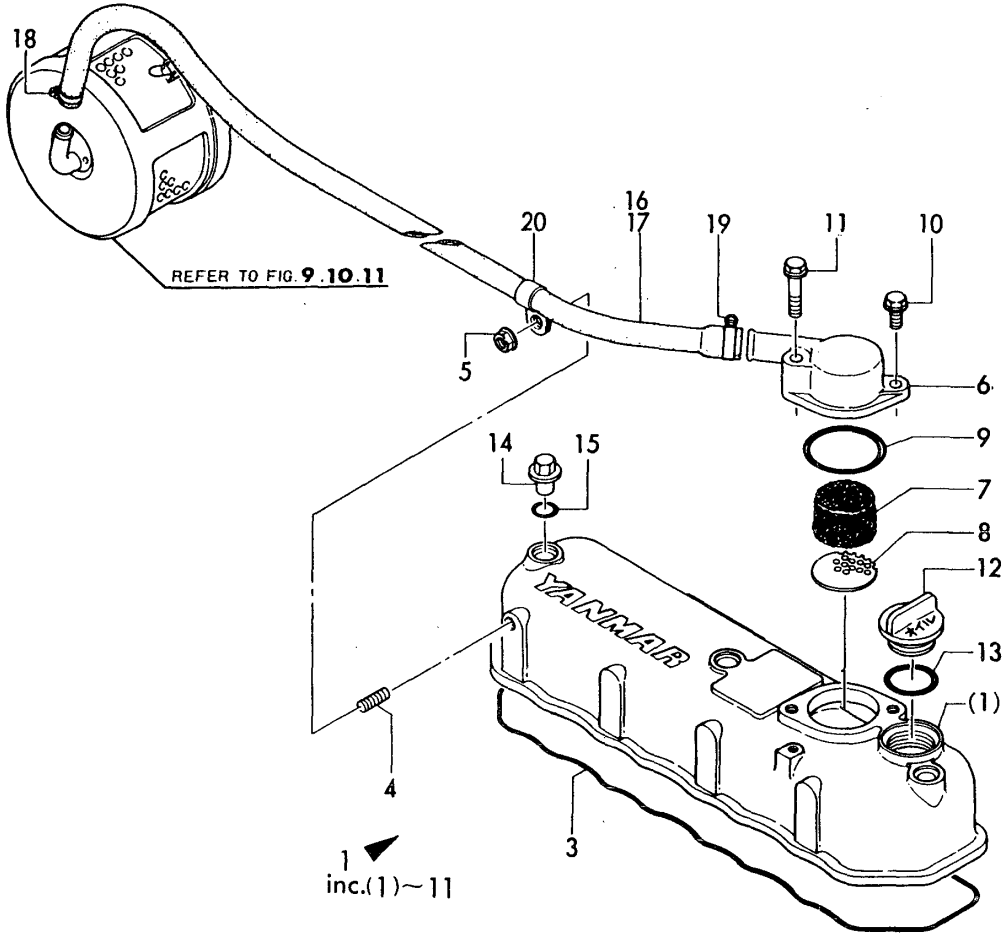

(A)=4JH2E
(B)=4JH2-TE
(C)=4JH2-HTE
(D)=4JH2-DTE
(E)=4JH2-UTE(B)
(F)=

No.	Lev.	Parts No.	Description	Q'ty (A)	(B)	(C)	(D)	(E)	(F)	I	R
1	1	729470-11520	BONNET ASSY, HEAD	1	1	1	1	1			
3	2	129550-11310	GASKET, BONNET	1	1	1	1	1			
4	2	121850-01910	STUD, M8X12	1	1	1	1	1			
5	2	26366-080002	NUT, M8	1	1	1	1	1			
6	2	129470-03010	COVER, BREATHER	1	1	1	1	1			
7	2	129150-03070	BAFFLE, BREATHER	1	1	1	1	1			
8	2	121750-03080	PLATE, BAFFLE	1	1	1	1	1			
9	2	24341-000500	O-RING, 1AS50.0	1	1	1	1	1			
10	2	26106-080202	BOLT, M8X 20 PLATED	1	1	1	1	1			
11	2	26106-080402	BOLT, M8X 40 PLATED	1	1	1	1	1			
12	1	124160-01751	COVER, FILLER	1	1	1	1	1			
13	1	24311-000320	O-RING, 1AP32.0	1	1	1	1	1			
14	1	124160-11360	KNOB	3	3	3	3	3			
15	1	24311-000120	O-RING, 1AP12.0	3	3	3	3	3			
16	1	129472-03090	PIPE , BREATHER		1	1	1	1			
17	1	129470-03090	PIPE, BREATHER	1							
18	1	23000-016000	CLAMP, 16	1	1	1	1	1			
18-1	1	129301-03660	CLAMP 16	1	1	1	1	1		R	
	(A=*1990.11)	(B=*1990.11)	(C=*1990.11)	(D=*1990.11)	(E=*1990.11)						
19	1	23000-025000	CLAMP, 25	1	1	1	1	1			
19-1	1	129410-03990	CLIP	1	1	1	1	1		R	
	(A=*1990.11)	(B=*1990.11)	(C=*1990.11)	(D=*1990.11)	(E=*1990.11)						
20	1	23297-160081	CLAMP, A16X 8	1	1	1	1	1			

N:Old ←Yes/No→ New, Q:Old ←No/Yes→ New, R:Old ←Yes/Yes→ New, S:Old ←No/No→ New, W:Add, Z:Discontinued, F:Interchangeable by set, K:Q'ty Change

Copyright (C) YANMAR CO., LTD. All RightsReserved.

Fig.9. SUCTION MANIFOLD(4JH2E)

Fig. 9 キュウキマニホールド(4JH2-E)
SUCTION MANIFOLD

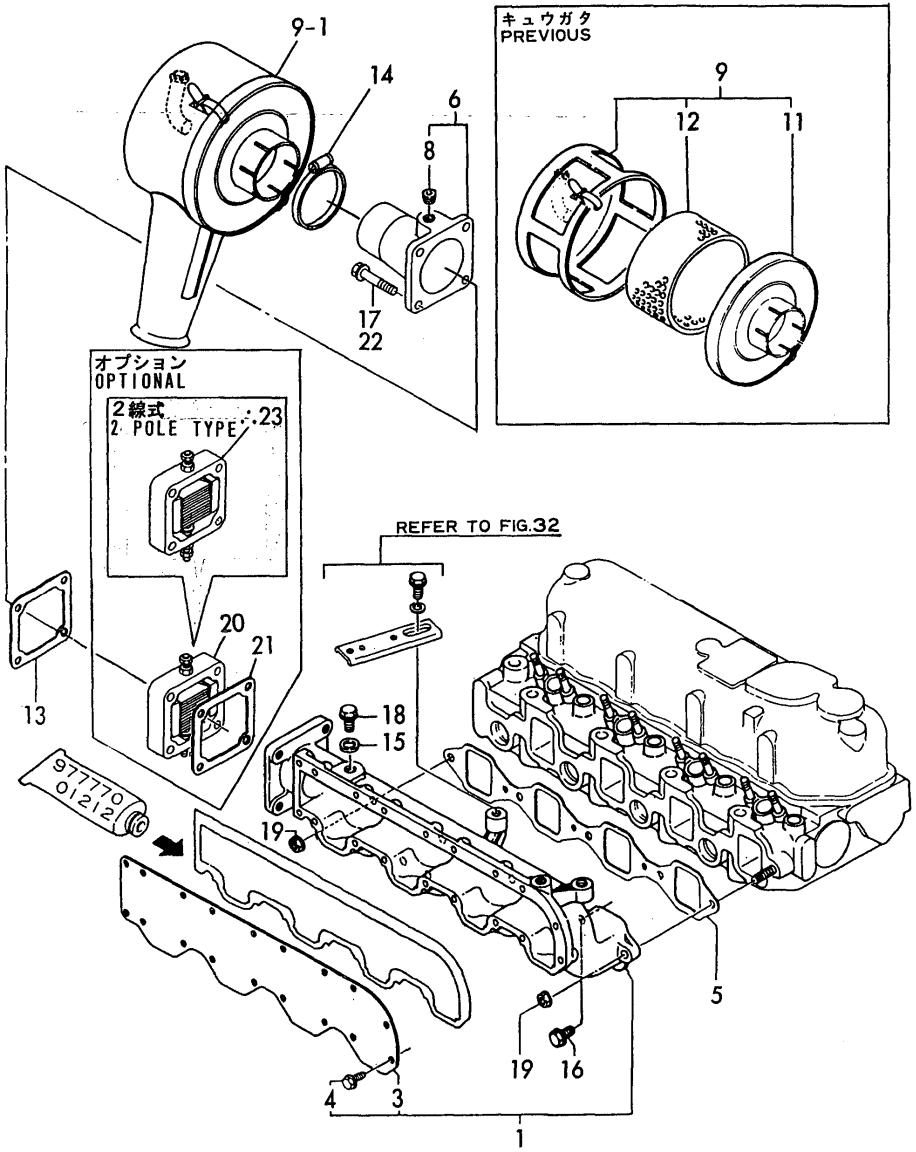

(A)=4JH2E (D)=4JH2-DTE
(B)=4JH2-TE (E)=4JH2-UTE(B)
(C)=4JH2-HTE (F)=

No.	Lev.	Parts No.	Description	Q'ty (A)	(B)	(C)	(D)	(E)	(F)	I	R
1	1	129470-12100	MANIFOLD ASSY,INTAKE	1							
3	2	129470-12120	COVER, MANIFOLD	1							
4	2	26476-060142	SCREW, TAPPING M6X14	18							
5	1	129470-12130	GASKET, MANIFOLD	1							
6	1	129470-12210	JOINT ASSY	1							
8	2	23871-010000	PLUG, R01	1							
9	1	129470-12300	SILENCER ASSY	1							
9-1	1	129570-12300	SILENCER ASSY	1						N	
	(A=*1990.07)										
11	2	129470-12320	PLATE	1						Z	
	(A=*1990.07)										
12	2	129470-12330	ELEMENT ASSY	1						Z	
	(A=*1990.07)										
13	1	129470-77590	GASKET	1							
14	1	23000-054000	CLAMP, 54	1							
15	1	23414-100000	GASKET, 10X1.0	1							
16	1	26106-080202	BOLT, M8X 20 PLATED	3							
17	1	26106-080202	BOLT, M8X 20 PLATED	4							
18	1	26106-100122	BOLT, M10X 12 PLATED	1							
19	1	26366-080002	NUT, M8	2							
20	1	129100-77500	HEATER, AIR 12V	1							1
21	1	129100-77510	GASKET	1							1
22	1	26106-080402	BOLT, M8X 40 PLATED	4							1
23	1	129400-77501	HEATER	1						W	2
	(A=E07940)										

Remarks
(1) OPTIONAL
(2) OPTIONAL : 2POLE TYPE.

N:Old $\xleftarrow[\text{No}]{\text{Yes}}$ New, Q:Old $\xleftarrow[\text{Yes}]{\text{No}}$ New, R:Old $\xleftarrow[\text{Yes}]{\text{Yes}}$ New, S:Old $\xleftarrow[\text{No}]{\text{No}}$ New, W:Add, Z:Discontinued, F:Interchangeable by set, K:Q'ty Change

Copyright (C) YANMAR CO., LTD. All RightsReserved.

Fig.10. SUCTION MANIFOLD(4JH2-TE)

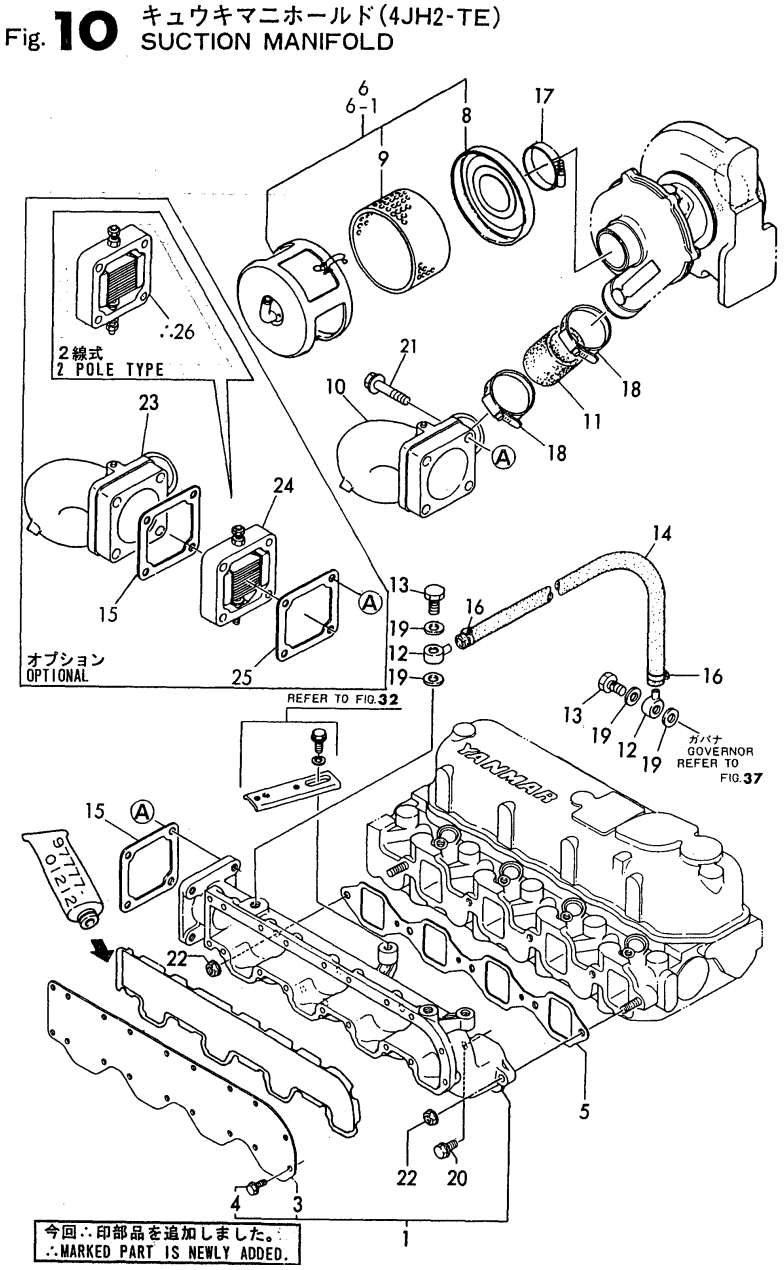

Remarks
(1) OPTIONAL
(2) OPTIONAL : 2POLE TYPE.

(A)=4JH2E (D)=4JH2-DTE
(B)=4JH2-TE (E)=4JH2-UTE(B)
(C)=4JH2-HTE (F)=

No.	Lev.	Parts No.	Description	Q'ty (A)	(B)	(C)	(D)	(E)	(F)	I	R
1	1	129470-12100	MANIFOLD ASSY,INTAKE		1						
3	2	129470-12120	COVER, MANIFOLD		1						
4	2	26476-060142	SCREW, TAPPING M6X14		18						
5	1	129470-12130	GASKET, MANIFOLD		1						
6	1	129470-12300	SILENCER ASSY		1						
6-1	1	129470-12301	SILENCER ASSY		1					S	
		(B=*1991.01)									
8	2	129470-12320	PLATE		1						
9	2	129470-12330	ELEMENT ASSY		1						
10	1	129571-18130	DUCT, AIR		1						
11	1	129595-18141	JOINT, RUBBER		1						
12	1	129590-18520	JOINT		2						
13	1	124160-39140	BOLT, PIPE JOINT M10		2						
14	1	124070-59110	PIPE, FUEL L=155		1						
15	1	129470-77590	GASKET		1						
16	1	23000-013000	CLAMP, 13		2						
17	1	23000-054000	CLAMP, 54		1						
18	1	23000-060000	CLAMP, 60		2						
19	1	23414-100000	GASKET, 10X1.0		4						
20	1	26106-080202	BOLT, M8X 20 PLATED		3						
21	1	26106-080402	BOLT, M8X 40 PLATED		4						
22	1	26366-080002	NUT, M8		2						
23	1	129571-18140	DUCT, AIR		1						1
24	1	129100-77500	HEATER, AIR 12V		1						1
25	1	129100-77510	GASKET		1						1
26	1	129400-77501	HEATER		1					W	2
		(B=E14619)									

N:Old ←Yes/No→ New, Q:Old ←No/Yes→ New, R:Old ←Yes/Yes→ New, S:Old ←No/No→ New, W:Add, Z:Discontinued, F:Interchangeable by set, K:Q'ty Change

Copyright (C) YANMAR CO., LTD. All RightsReserved.

Fig.11. SUCTION MANIFOLD(4JH2-HTE,DTE,UTE)

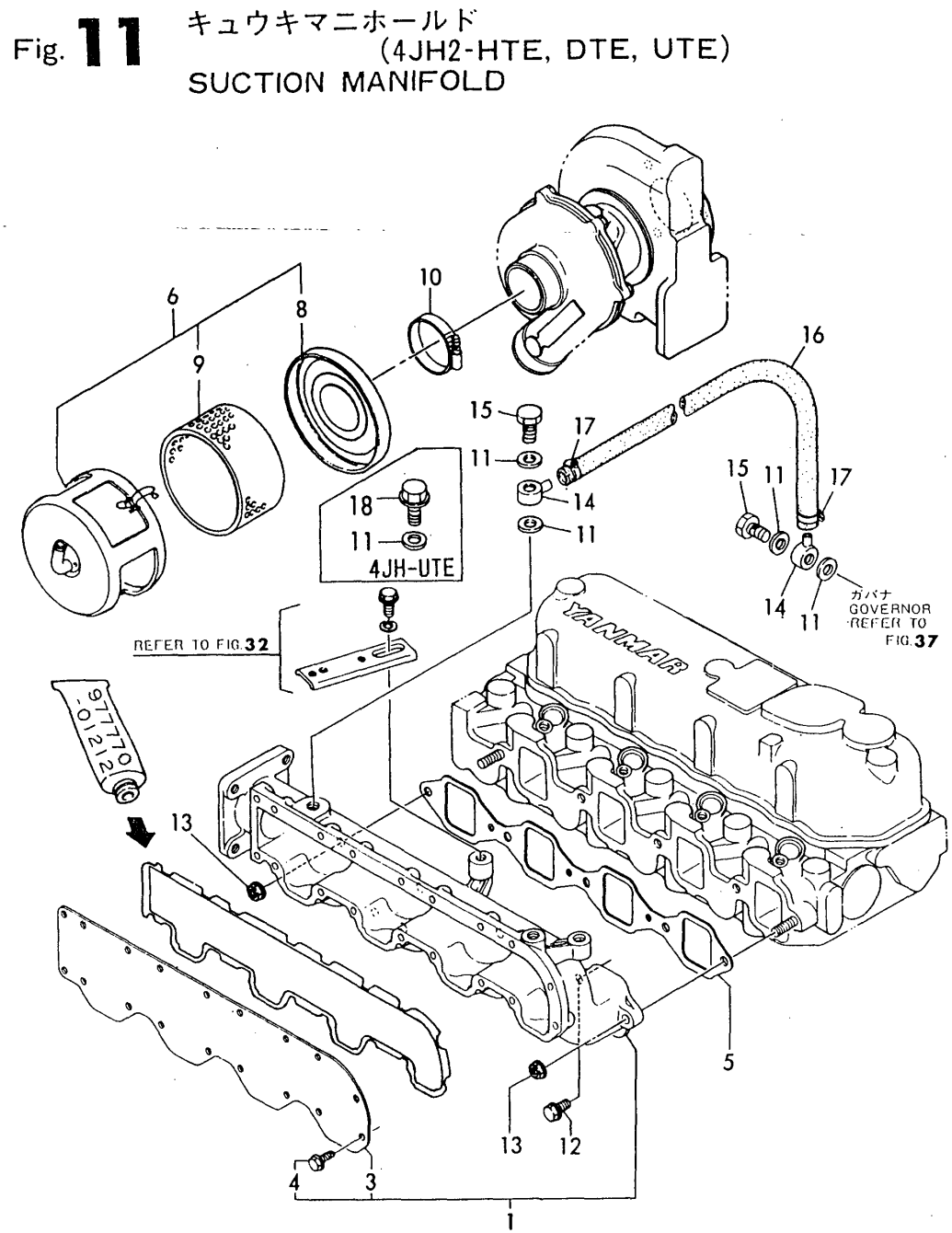

(A)=UJH2E
(B)=4JH2-TE
(C)=4JH2-HTE
(D)=4JH2-DTE
(E)=4JH2-UTE(B)
(F)=

No.	Lev.	Parts No.	Description	Q'ty (A)	(B)	(C)	(D)	(E)	(F)	I	R
1	1	129470-12100	MANIFOLD ASSY,INTAKE			1	1	1			
3	2	129470-12120	COVER, MANIFOLD			1	1	1			
4	2	26476-060142	SCREW, TAPPING M6X14			18	18	18			
5	1	129550-12110	GASKET, MANIFOLD				1				
5-1	1	129470-12130	GASKET, MANIFOLD (D=E31928)			1	1	1		N	
6	1	129470-12300	SILENCER ASSY			1	1	1			
6-1	1	129470-12301	SILENCER ASSY (C=*1991.01) (D=*1991.01)			1	1	1		S	
8	2	129470-12320	PLATE			1	1	1			
9	2	129470-12330	ELEMENT ASSY			1	1	1			
10	1	23000-054000	CLAMP, 54			1	1	1			
11	1	23414-100000	GASKET, 10X1.0			4	4	1			
12	1	26106-080202	BOLT, M8X 20 PLATED			3	3	3			
13	1	26366-080002	NUT, M8			2	2	2			
14	1	129590-18520	JOINT			2	2				
15	1	124160-39140	BOLT, PIPE JOINT M10			2	2				
16	1	124070-59110	PIPE, FUEL L=155			1	1				
17	1	23000-013000	CLAMP, 13			2	2				
18	1	26106-100122	BOLT, M10X 12 PLATED					1			

N:Old $\xleftarrow[\text{No}]{\text{Yes}}$ New, Q:Old $\xleftarrow[\text{Yes}]{\text{No}}$ New, R:Old $\xleftarrow[\text{Yes}]{\text{Yes}}$ New, S:Old $\xleftarrow[\text{No}]{\text{No}}$ New, W:Add, Z:Discontinued, F:Interchangeable by set, K:Q'ty Change

Copyright (C) YANMAR CO., LTD. All RightsReserved.

Fig.12. CAMSHAFT & DRIVING GEAR

Fig. 12 カムシャフト＆クドウギヤ CAMSHAFT & DRIVING GEAR

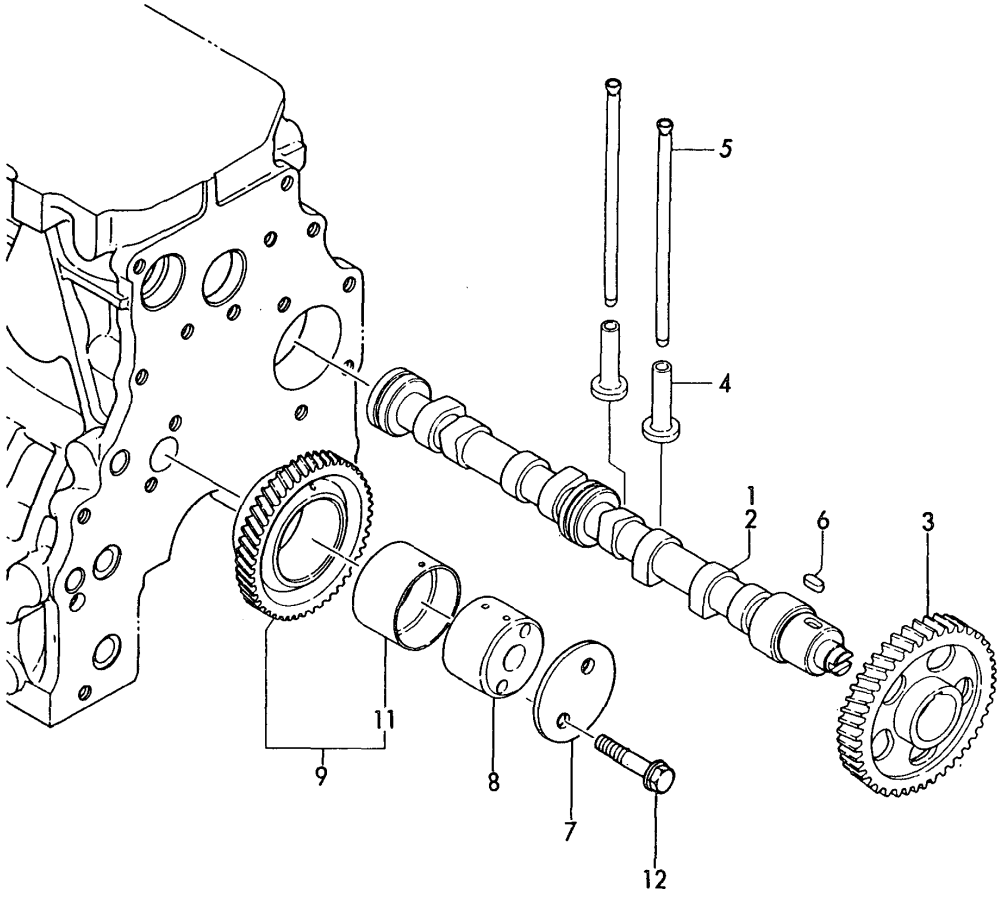

(A)=4JH2E (D)=4JH2-DTE
(B)=4JH2-TE (E)=4JH2-UTE(B)
(C)=4JH2-HTE (F)=

No.	Lev.	Parts No.	Description	Q'ty (A)	(B)	(C)	(D)	(E)	(F)	I	R
1	1	129472-14011	CAMSHAFT		1	1	1	1			
2	1	129470-14011	CAMSHAFT	1							
3	1	129150-14101	GEAR, CAMSHAFT	1	1	1	1	1			
4	1	129150-14200	TAPPET	8	8	8	8	8			
5	1	119171-14400	ROD, PUSH L=178	8	8	8	8	8			
6	1	22512-070140	KEY, 7X 14	1	1	1	1	1			
7	1	129150-25020	RETAINER	1	1	1	1	1			
8	1	129150-25052	SHAFT, IDLE	1	1	1	1	1			
9	1	129150-25101	GEAR ASSY, IDLE	1	1	1	1	1			
9-1	1	129573-25100	GEAR ASSY, IDLE	1	1	1	1	1		N	
	(A=*1989.07)	(B=*1989.07)	(C=*1989.07) (D=*1989.07)	(E=*1989.07)							
11	2	129150-25061	BUSH, IDLE GEAR	1	1	1	1	1			
11-1	2	129573-25060	BUSH, IDLE GEAR	1	1	1	1	1		N	
	(A=*1989.07)	(B=*1989.07)	(C=*1989.07) (D=*1989.07)	(E=*1989.07)							
12	1	26106-080452	BOLT, M8X 45 PLATED	2	2	2	2	2			

N:Old ◄Yes/No► New, Q:Old ◄No/Yes► New, R:Old ◄Yes/Yes► New, S:Old ◄No/No► New, W:Add, Z:Discontinued, F:Interchangeable by set, K:Q'ty Change

Copyright (C) YANMAR CO., LTD. All RightsReserved.

Fig.13. MIXING ELBOW

(A)=4JH2E
(B)=4JH2-TE
(C)=4JH2-HTE
(D)=4JH2-DTE
(E)=4JH2-UTE(B)
(F)=

Fig. 13 ミキシングエルボ MIXING ELBOW

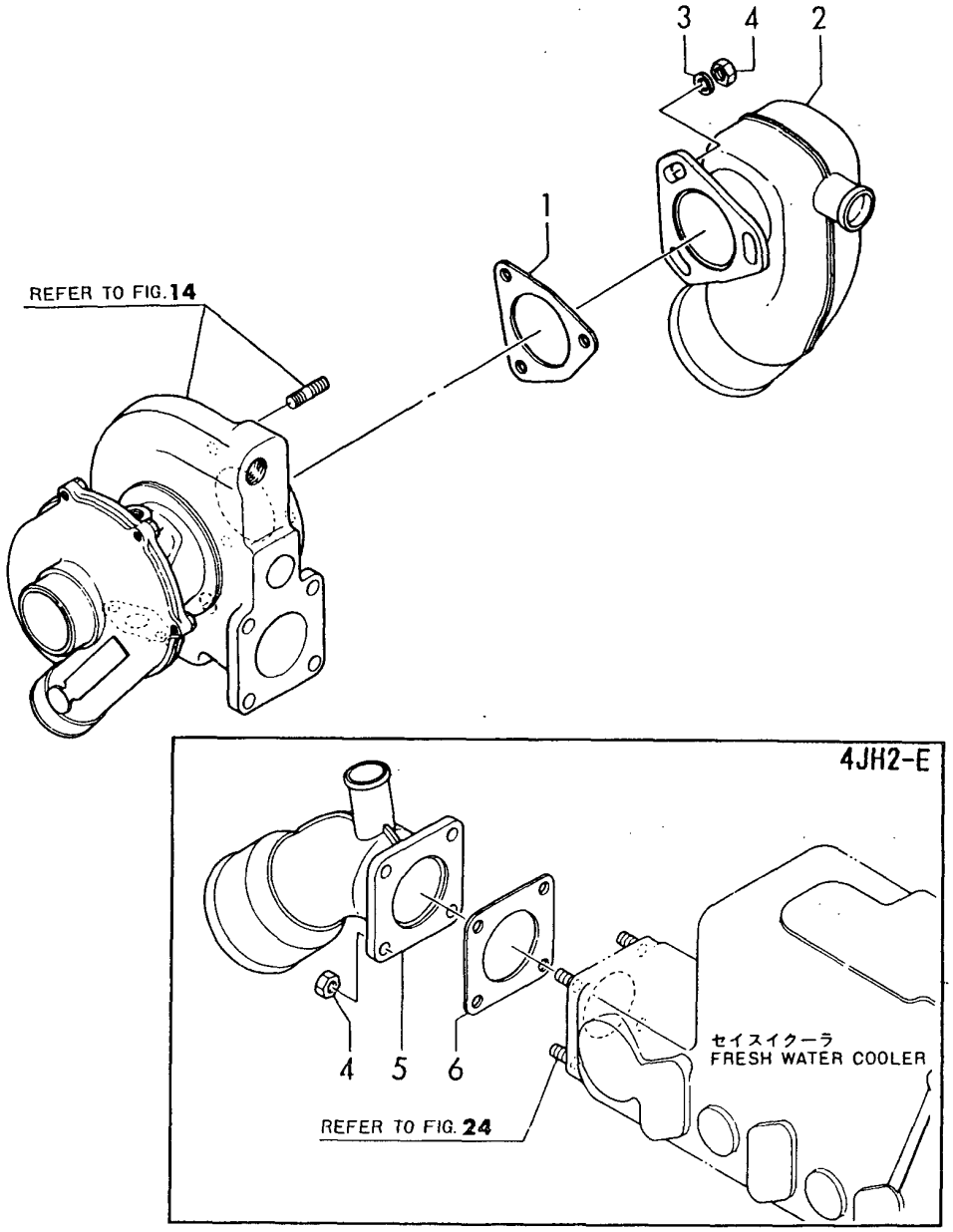

No.	Lev.	Parts No.	Description	Q'ty (A)	(B)	(C)	(D)	(E)	(F)	I	R
1	1	129472-13520	GASKET		1	1	1	1			
2	1	129792-13552	ELBOW		1	1	1	1			
3	1	22137-080000	WASHER, 8		3	3	3	3			
4	1	26703-080002	NUT, M8	4	3	3	3	3			
5	1	129470-13560	ELBOW	1							
6	1	129472-18090	GASKET	1							

N:Old $\xleftarrow[\text{No}]{\text{Yes}}$ New, Q:Old $\xleftarrow[\text{Yes}]{\text{No}}$ New, R:Old $\xleftarrow[\text{Yes}]{\text{Yes}}$ New, S:Old $\xleftarrow[\text{No}]{\text{No}}$ New, W:Add, Z:Discontinued, F:Interchangeable by set, K:Q'ty Change

Copyright (C) YANMAR CO., LTD. All RightsReserved.

Fig.14. TURBINE

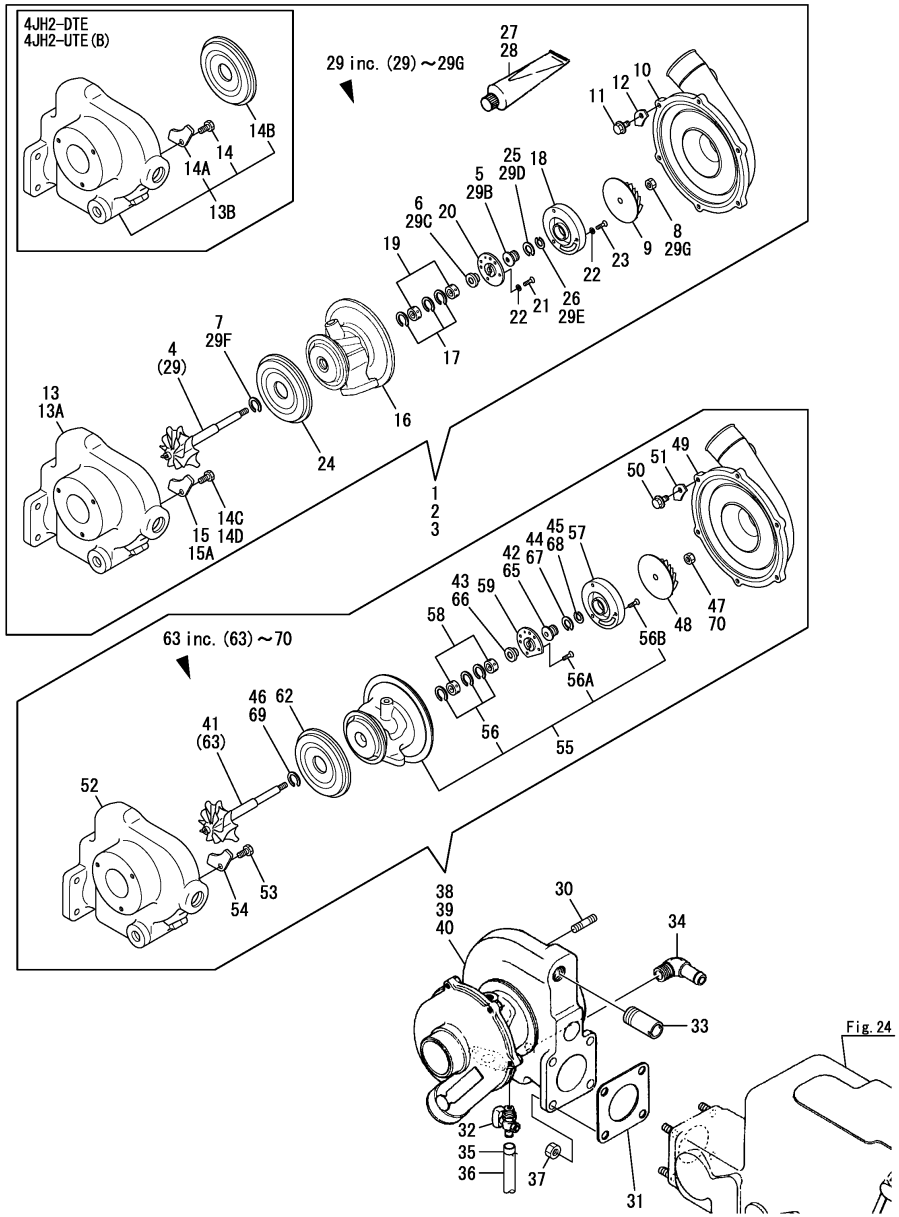

Remarks
(1)Interchangeability of No.2 applies to 'S'.
(2)Interchangeability of No.3 applies to 'S'.

(A)=4JH2E (D)=4JH2-DTE
(B)=4JH2-TE (E)=4JH2-UTE(B)
(C)=4JH2-HTE (F)=

No.	Lev.	Parts No.	Description	Q'ty (A)	(B)	(C)	(D)	(E)	(F)	I	R
1	1	129571-18000	TURBINE, RHB52HW		1						
2	1	129474-18001	TURBINE, RHB52HW (C=E23728)			1				Z	
3	1	129473-18000	TURBINE, RHB52HW (D=E35728) (E=E41490)				1	1		Z	
4	2	XNN131500	ROTOR SET		1						
4A	2	XNN131502	SHAFT,TURBO.				1	1			
5	2	XNN131004	OIL DRIP		1		1	1			
6	2	XNN131005	THRUST BUSH		1		1	1			
7	2	XNN131106	SEAL RING		1		1	1			
8	2	XNN131108	NUT		1		1	1			
9	2	XNN136607	IMPELLER		1						
9A	2	XNN136606	WHEEL BR348C			1	1	1			
10	2	XNE924350	HOUSING,BLOWER		1	1					
10A	2	XNN134092	HOUSING,BLOWER				1	1			
11	2	XNB134007	BOLT M 5		6	6	6	6			
12	2	XNB134035	RETAINER		6						
12A	2	XNN134035	RETAINER			6	6	6			
13	2	XNE929040	HOUSING, TURBINE		1						
13A	2	XNE929010	HOUSING,TURBO.			1					
13B	2	XNN139400	HOUSING,TURBO.				1	1			
14	3	XNN137007	BOLT, M8				4	4			
14A	3	XNN137423	RETAINER				4	4			
14B	3	XNN137055	PROTECTOR, HEAT				1	1			
14C	2	XNN196103	BOLT		4						
14D	2	XNN137007	BOLT, M8			4					
15	2	XNN197404	RETAINER		4						
15A	2	XNN137423	RETAINER			4					
16	2	XNE923301	HOUSING, BEARING		1						
16A	2	XNE923300	HOUSING,BEARING			1					
16B	2	XNN133442	HOUSING,BEARING				1	1			
17	2	XNN133204	CIRCLIP		3	3	3	3			
17-1	2	XNN133208	CIRCLIP		3	3	3	3		S	
			(B=*1991.01.) (C=*1991.01.) (D=*1991.01.) (E=*1991.01.)								
18	2	XNN133001	SEAL PLATE		1	1	1	1			
19	2	XNN133504	FLOATING BEARING		2	2	2	2			
20	2	XNN133505	THRUST METAL		1	1	1	1			
21	2	XNB133206	SCREW		4	4					
21A	2	XNN977006	SCREW				4	4			
22	2	XNN977007	WASHER				7	7			
23	2	XNB133208	SCREW(SEAL PLATE		3	3					
23A	2	XNN133207	SCREW				3	3			
24	2	XNN137055	PROTECTOR, HEAT		1	1	1	1			
25	2	XNN131008	SEAL RING,BLOW.SIDE		1	1	1	1			
26	2	XNB131008	SEAL RING,BLOW.SIDE		1	1	1	1			
27	2	XNN193653	GASKET, RIQUID		1	1	1	1			
28	2	XNN193655	BONDO		1	1	1	1			
29	2	XNN131570	ROTOR SET			1					
29B	3	XNN131578	SHELTER			1					
29C	3	XNN131579	BUSH, THRUST			1					
29D	3	XNN131008	SEAL RING,BLOW.SIDE			1					

N:Old $\xleftarrow[\text{No}]{\text{Yes}}$ New, Q:Old $\xleftarrow[\text{Yes}]{\text{No}}$ New, R:Old $\xleftarrow[\text{Yes}]{\text{Yes}}$ New, S:Old $\xleftarrow[\text{No}]{\text{No}}$ New, W:Add, Z:Discontinued, F:Interchangeable by set, K:Q'ty Change

++ CONTINUE ++

Copyright (C) YANMAR CO., LTD. All RightsReserved.

Fig.14. TURBINE

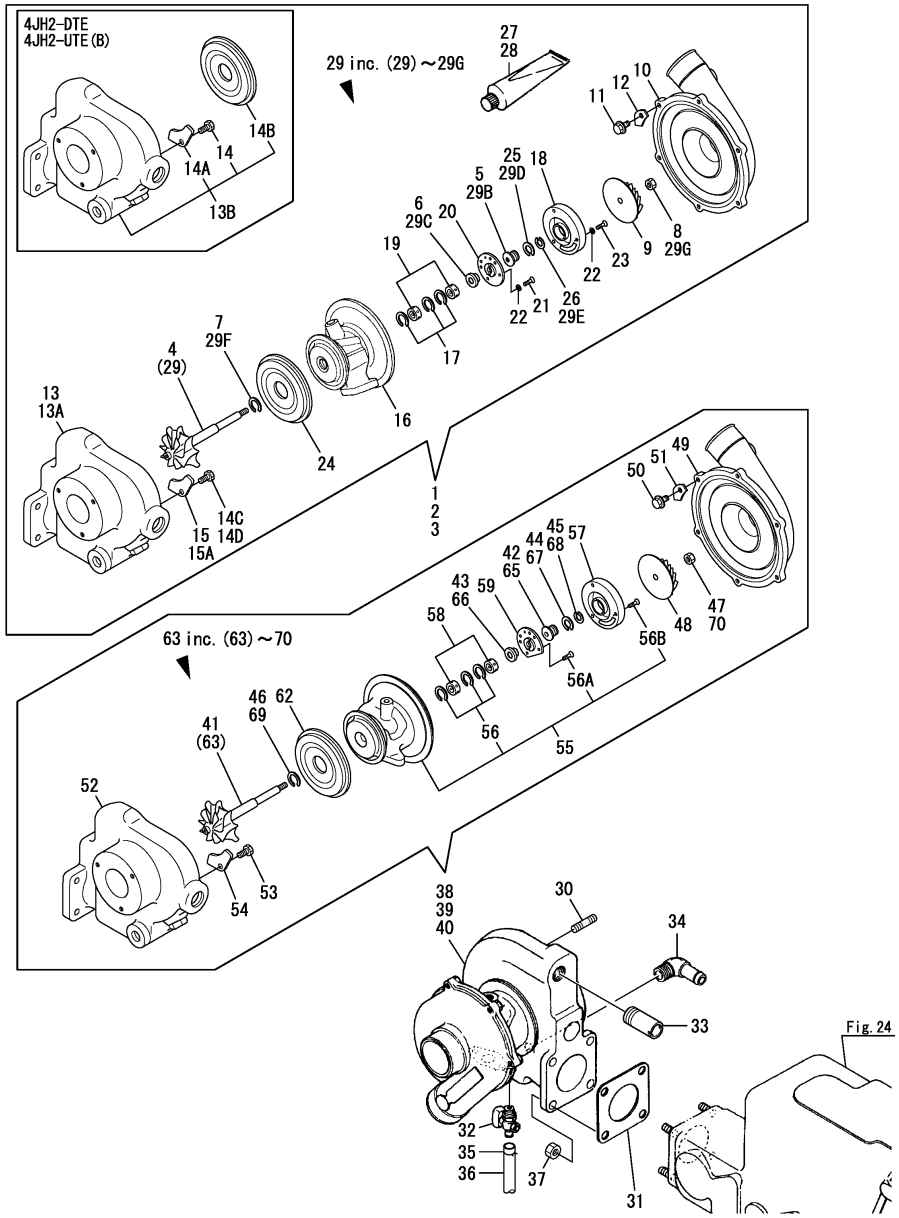

Remarks
(1)Interchangeability of No.2 applies to 'S'.
(2)Interchangeability of No.3 applies to 'S'.

(A)=4JH2E (D)=4JH2-DTE
(B)=4JH2-TE (E)=4JH2-UTE(B)
(C)=4JH2-HTE (F)=

No.	Lev.	Parts No.	Description	Q'ty (A)	(B)	(C)	(D)	(E)	(F)	I	R
29E	3	XNB131008	SEAL RING,BLOW.SIDE			1					
29F	3	XNN131536	SEALING			1					
29G	3	XN131108	NUT			1					
30	1	128170-13600	STUD, M8X31		3	3	3	3			
31	1	129792-18090	GASKET				1				
31-1	1	129472-18090	GASKET		1	1	1	1		N	
			(D=E31928)								
32	1	128695-44090	COCK		1	1	1	1			
33	1	129474-44480	JOINT		1	1	1	1			
33-1	1	104407-44480	JOINT		1	1	1	1		R	
			(B=*1991.01.) (C=*1991.01.) (D=*1991.01.)	(E=*1991.01.)							
34	1	171007-49400	JOINT		1	1	1	1			
35	1	124460-77680	RETAINER		1	1	1	1			
36	1	23061-070300	PIPE, 7X 300		1	1	1	1			
37	1	26703-080002	NUT, M8		4	4	4	4			
38	1	129572-18000	TURBINE, B52HW			1				W	1
			(C=E23728)								
39	1	129573-18000	TURBINE, B52HW				1			W	2
			(D=E35728)								
40	1	129574-18000	TURBINE, RHB52HW					1		W	2
				(E=E41490)							
41	2	XNN131614	SHAFT			1					
41B	2	XNN131502	SHAFT,TURBO.					1			
42	2	XNN131578	SHELTER			1		1			
43	2	XNN131579	BUSH, THRUST			1		1			
44	2	XNB131008	SEAL RING,BLOW.SIDE			1		1			
45	2	XNN131008	SEAL RING,BLOW.SIDE			1		1			
46	2	XNN131536	SEALING			1		1			
47	2	XNN131108	NUT			1		1			
48	2	XNN136613	IMPELLER			1		1			
48A	2	XNN136610	IMPELLER				1				
49	2	XNN133911	HOUSING,BLOWER			1		1			
49A	2	XNE924560	HOUSING,BLOWER				1				
50	2	XNB134007	BOLT M 5			6	6	6			
51	2	XNN134035	RETAINER			6	6	6			
52	2	XNE928722	HOUSING			1					
52A	2	XNE929010	HOUSING,TURBO.				1				
52B	2	XNE929000	HOUSING,TURBO.					1			
53	2	XNN137007	BOLT, M8			4	4	4			
54	2	XNN137423	RETAINER			4	4	4			
55	2	XNE923383	HOUSING,BEARING			1					
55A	2	XNE923301	HOUSING, BEARING				1				
55B	2	XNN133382	HOUSING,BEARING					1			
56	3	XNN133208	CIRCLIP			3	3	3			
56A	3	XNB133206	SCREW			4	4	4			
56B	3	XNB133208	SCREW(SEAL PLATE			3	3	3			
57	2	XNN133021	SEAL PLATE			1	1	1			
58	2	XNN133506	METAL, FLOATING			2	2	2			
59	2	XNN133596	METAL,THRUST			1	1	1			
62	2	XNN137055	PROTECTOR, HEAT			1	1	1			
63	2	XNN131570	ROTOR SET				1				

N:Old $\xleftarrow[\text{No}]{\text{Yes}}$ New, Q:Old $\xleftarrow[\text{Yes}]{\text{No}}$ New, R:Old $\xleftarrow[\text{Yes}]{\text{Yes}}$ New, S:Old $\xleftarrow[\text{No}]{\text{No}}$ New, W:Add, Z:Discontinued, F:Interchangeable by set, K:Q'ty Change

++ CONTINUE ++

Copyright (C) YANMAR CO., LTD. All RightsReserved.

Fig.14. TURBINE

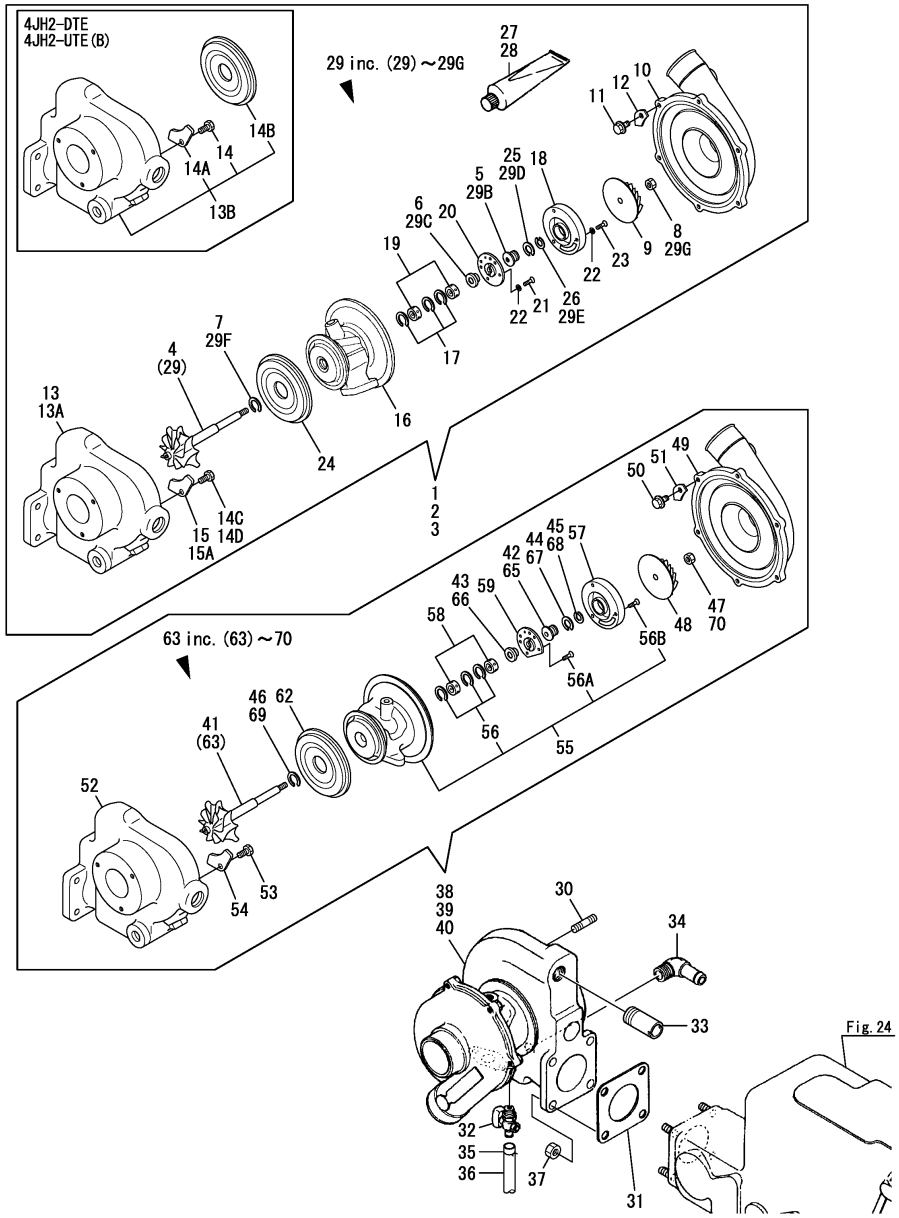

(A)=4JH2E
(B)=4JH2-TE
(C)=4JH2-HTE
(D)=4JH2-DTE
(E)=4JH2-UTE(B)
(F)=

No.	Lev.	Parts No.	Description	Q'ty (A)	(B)	(C)	(D)	(E)	(F)	I	R
65	3	XNN131578	SHELTER				1				
66	3	XNN131579	BUSH, THRUST				1				
67	3	XNN131008	SEAL RING,BLOW.SIDE				1				
68	3	XNB131008	SEAL RING,BLOW.SIDE				1				
69	3	XNN131536	SEALING				1				
70	3	XN131108	NUT				1				

Remarks
(1)Interchangeability of No.2 applies to 'S'.
(2)Interchangeability of No.3 applies to 'S'.

N:Old $\xleftarrow[\text{No}]{\text{Yes}}$ New, Q:Old $\xleftarrow[\text{Yes}]{\text{No}}$ New, R:Old $\xleftarrow[\text{Yes}]{\text{Yes}}$ New, S:Old $\xleftarrow[\text{No}]{\text{No}}$ New, W:Add, Z:Discontinued, F:Interchangeable by set, K:Q'ty Change

Copyright (C) YANMAR CO., LTD. All RightsReserved.

Fig.15. INTER COOLER(4JH2-HTE)

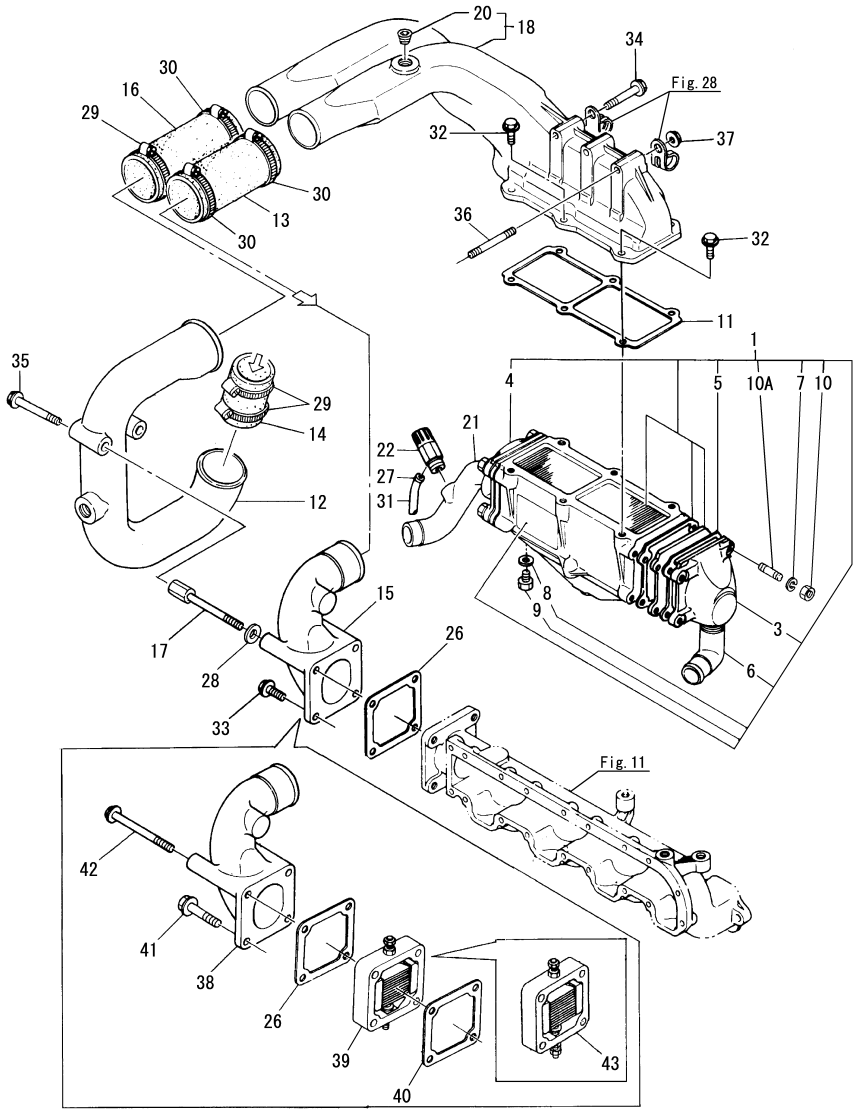

(A)=4JH2E (D)=4JH2-DTE
(B)=4JH2-TE (E)=4JH2-UTE(B)
(C)=4JH2-HTE (F)=

No.	Lev.	Parts No.	Description	Q'ty (A)	(B)	(C)	(D)	(E)	(F)	I	R
1	1	129474-18100	COOLER ASSY, INTER			1					
3	2	129474-18220	TANK(A)			1					
4	2	129474-18230	TANK(B)			1					
5	2	129474-18240	GASKET			2					
5-1	2	129474-18241	GASKET (C=*1984.05.)			2				N	
6	2	123325-49490	ELBOW			1					
7	2	22217-080000	WASHER, SPRING 8			8					
8	2	23414-130000	GASKET, 13X1.0			1					
9	2	23894-020002	PLUG, G1/4			1					
10	2	26366-080002	NUT, M8			8					
10A	2	X3916003482	STUD M6			8					
11	1	129573-18120	GASKET			1					
12	1	129595-18131	DUCT, AIR			1					
13	1	129474-18140	HOSE, RUBBER			1					
14	1	129595-18141	JOINT, RUBBER			1					
15	1	129474-18150	BEND			1					
16	1	129595-18151	JOINT, RUBBER			1					
17	1	129595-18160	BOLT			2					
18	1	129474-18180	DUCT, AIR			1					
20	2	23871-010000	PLUG, R01			1					
21	1	129474-49020	BEND			1					
22	1	120130-49350	COCK, 1/4			1					
26	1	129470-77590	GASKET			1					
27	1	124460-77680	RETAINER			1					
28	1	22137-080000	WASHER, 8			2					
29	1	23000-060000	CLAMP, 60			3					
30	1	23000-070000	CLAMP, 70			3					
31	1	23061-070300	PIPE, 7X 300			1					
32	1	26106-080202	BOLT, M8X 20 PLATED			6					
33	1	26106-080202	BOLT, M8X 20 PLATED			2					
34	1	26106-080502	BOLT, M8X 50 PLATED			1					
35	1	26106-080802	BOLT, M8X 80 PLATED			2					
36	1	26226-080502	STUD, M8X 50			2					
37	1	26366-080002	NUT, M8			2					
38	1	129474-18170	BEND			1					1
39	1	129100-77500	HEATER, AIR 11V			1					1
40	1	129100-77510	GASKET, AIR HEATER			1					1
41	1	26106-080402	BOLT, M8X 40 PLATED			2					1
42	1	26106-080952	BOLT, M8X 95 PLATED			2					1
43	1	129400-77501	HEATER (C=E23484)			1				W	2

Remarks
(1)Optional parts.
(2)Optional parts. : Erath float type.

N:Old $\frac{\text{Yes}}{\text{No}}$ New, Q:Old $\frac{\text{No}}{\text{Yes}}$ New, R:Old $\frac{\text{Yes}}{\text{Yes}}$ New, S:Old $\frac{\text{No}}{\text{No}}$ New, W:Add, Z:Discontinued, F:Interchangeable by set, K:Q'ty Change

Copyright (C) YANMAR CO., LTD. All RightsReserved.

Fig.16. INTER COOLER(4JH2-DTE,UTE)

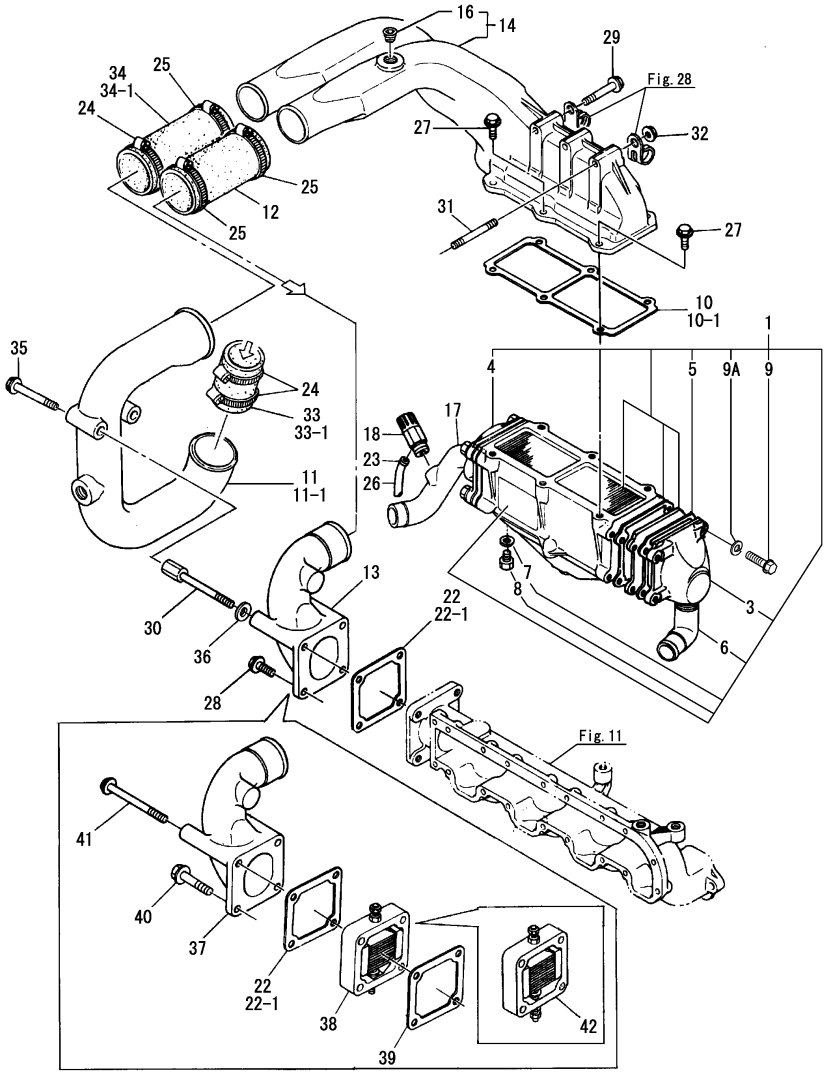

Remarks
(1)No.33-1 & 34-1 interchangeable by set.
(2)Optional parts.
(3)Optional parts. : Erath float type.

(A)=4JH2E (D)=4JH2-DTE
(B)=4JH2-TE (E)=4JH2-UTE(B)
(C)=4JH2-HTE (F)=

No.	Lev.	Parts No.	Description	Q'ty (A)	(B)	(C)	(D)	(E)	(F)	I	R
1	1	129473-18101	COOLER ASSY, INTER				1	1			
3	2	129474-18220	TANK(A)				1	1			
4	2	129474-18230	TANK(B)				1	1			
5	2	129474-18241	GASKET				2	2			
6	2	123325-49490	ELBOW				1	1			
7	2	23414-130000	GASKET, 13X1.0				1	1			
8	2	23894-020002	PLUG, G1/4				1	1			
9	2	26013-080302	BOLT, M8X 30				8	8			
9A	2	22217-080000	WASHER, SPRING 8				8	8		W	
			(D=*1987.09.)	(E=*1987.09.)							
10	1	129474-18120	GASKET				1				
10-1	1	129573-18120	GASKET				1	1		N	
			(D=E31928)								
11	1	129595-18130	DUCT, AIR				1				
11-1	1	129595-18131	DUCT, AIR				1	1		F	1
			(D=E31951)								
12	1	129474-18140	HOSE, RUBBER				1	1			
13	1	129474-18150	BEND				1	1			
14	1	129474-18180	DUCT, AIR				1	1			
16	2	23871-010000	PLUG, R01				1	1			
17	1	129474-49020	BEND				1	1			
18	1	120130-49350	COCK, 1/4				1	1			
22	1	129150-77510	GASKET				1				
22-1	1	129470-77590	GASKET				1	1		N	
			(D=E31928)								
23	1	124460-77680	RETAINER				1	1			
24	1	23000-060000	CLAMP, 60				3	3			
25	1	23000-070000	CLAMP, 70				3	3			
26	1	23061-070300	PIPE, 7X 300				1	1			
27	1	26106-080202	BOLT, M8X 20 PLATED				6	6			
28	1	26106-080202	BOLT, M8X 20 PLATED				2	2			
29	1	26106-080502	BOLT, M8X 50 PLATED				1	1			
30	1	129595-18160	BOLT				2	2			
31	1	26226-080502	STUD, M8X 50				2	2			
32	1	26366-080002	NUT, M8				2	2			
33	1	129595-18140	JOINT, RUBBER				1				
33-1	1	129595-18141	JOINT, RUBBER				1	1		S	
			(D=E31951)								
34	1	129595-18150	JOINT, RUBBER L=125				1				
34-1	1	129595-18151	JOINT, RUBBER				1	1		S	
			(D=E31951)								
35	1	26106-080802	BOLT, M8X 80 PLATED				2	2			
36	1	22137-080000	WASHER, 8				2	2			
37	1	129474-18170	BEND				1	1			2
38	1	129100-77500	HEATER, AIR 11V				1	1			2
39	1	129100-77510	GASKET, AIR HEATER				1	1			2
40	1	26106-080402	BOLT, M8X 40 PLATED				2	2			2
41	1	26106-080952	BOLT, M8X 95 PLATED				2	2			2
42	1	129400-77501	HEATER				1	1		W	3
			(D=E34965)	(E=E40923)							

N:Old $\overset{\text{Yes}}{\underset{\text{No}}{\leftrightarrow}}$ New, Q:Old $\overset{\text{No}}{\underset{\text{Yes}}{\leftrightarrow}}$ New, R:Old $\overset{\text{Yes}}{\underset{\text{Yes}}{\leftrightarrow}}$ New, S:Old $\overset{\text{No}}{\underset{\text{No}}{\leftrightarrow}}$ New, W:Add, Z:Discontinued, F:Interchangeable by set, K:Q'ty Change

Copyright (C) YANMAR CO., LTD. All RightsReserved.

Fig.17. CRANKSHAFT & FLYWHEEL

Fig. 17 クランクシャフト＆フライホイル CRANKSHAFT & FLYWHEEL

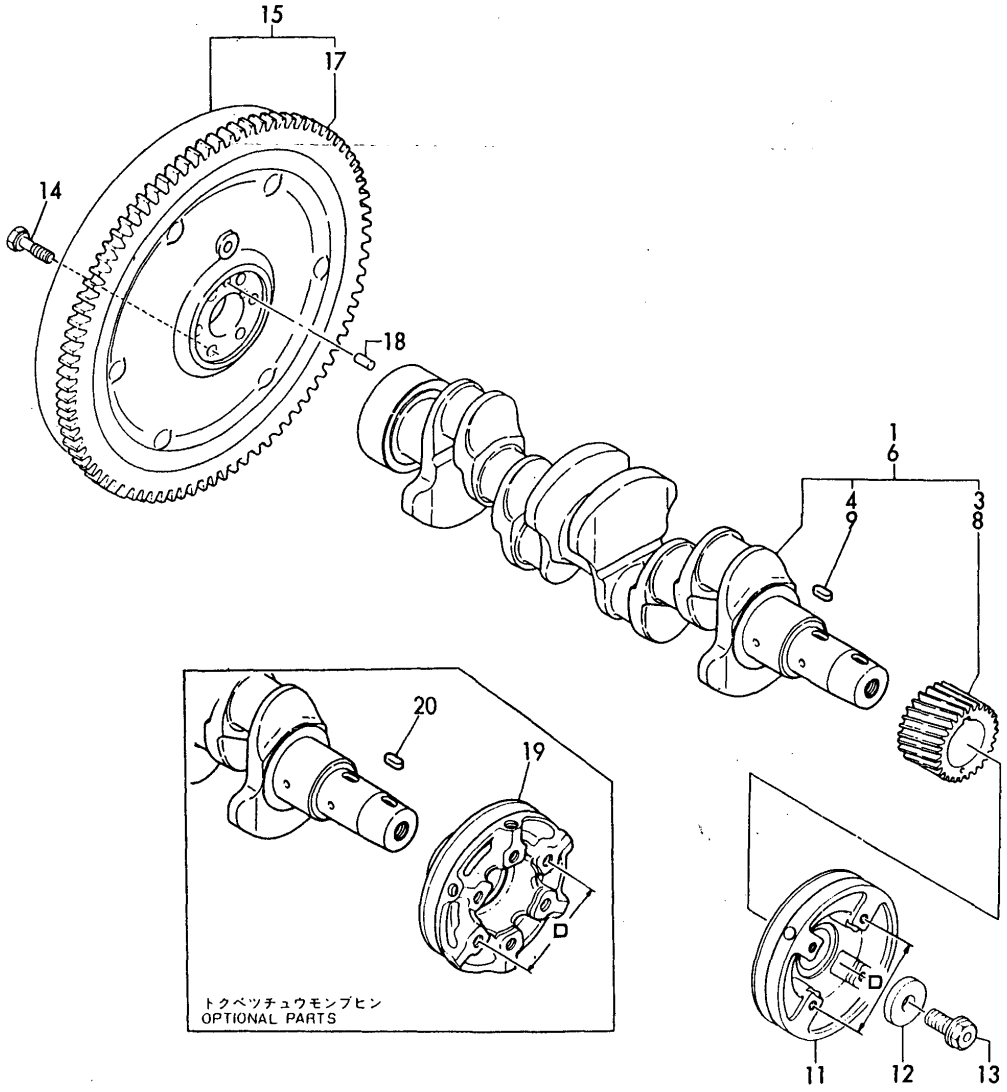

(A)=4JH2E (D)=4JH2-DTE
(B)=4JH2-TE (E)=4JH2-UTE(B)
(C)=4JH2-HTE (F)=

No.	Lev.	Parts No.	Description	Q'ty (A)	(B)	(C)	(D)	(E)	(F)	I	R
1	1	129470-21000	CRANKSHAFT ASSY	1							
1-1	1	129474-21000	CRANKSHAFT ASSY	1						N	
	(A=*1987.02)										
3	2	129150-21200	GEAR, CRANKSHAFT	1							
4	2	22512-070140	KEY, 7X 14	1							
6	1	129573-21000	CRANKSHAFT ASSY		1	1	1	1			
8	2	129150-21200	GEAR, CRANKSHAFT		1	1	1	1			
9	2	22512-070140	KEY, 7X 14		1	1	1	1			
11	1	129470-21650	V-PULLEY, 82.5	1	1	1	1	1			
12	1	129795-21661	WASHER	1	1	1	1	1			
13	1	121850-21680	BOLT	1	1	1	1	1			
14	1	121111-21501	BOLT, FLYWHEEL	6	6	6	6	6			
15	1	129573-21590	FLYWHEEL ASSY	1	1	1	1	1			
15-1	1	129570-21590	FLYWHEEL ASSY	1						N	
	(A=E00171)										
15A-2	1	129570-21591	FLYWHEEL ASSY	1			1			S	
	(A=E09282)		(D=E35370)								
15B-2	1	129572-21590	FLYWHEEL ASSY			1				S	
			(C=E23728)								
15C-2	1	129574-21590	FLYWHEEL ASSY		1			1		S	
		(B=E15092)			(E=E41481)						
17	2	124550-21600	GEAR, RING	1	1	1	1	1			
18	1	22312-080160	PIN, PARALLEL M8X16	1	1	1	1	1			
19	1	129490-21650	V-PULLEY, D82.5	1	1	1	1	1			1
20	1	22512-070160	KEY, 7X 16	1	1	1	1	1			1

Remarks
(1)OPTIONAL

N:Old $\overset{\text{Yes}}{\underset{\text{No}}{\leftrightarrow}}$ New, Q:Old $\overset{\text{No}}{\underset{\text{Yes}}{\leftrightarrow}}$ New, R:Old $\overset{\text{Yes}}{\underset{\text{Yes}}{\leftrightarrow}}$ New, S:Old $\overset{\text{No}}{\underset{\text{No}}{\leftrightarrow}}$ New, W:Add, Z:Discontinued, F:Interchangeable by set, K:Q'ty Change

Copyright (C) YANMAR CO., LTD. All RightsReserved.

Fig.18. PISTON & CONNECTING ROD

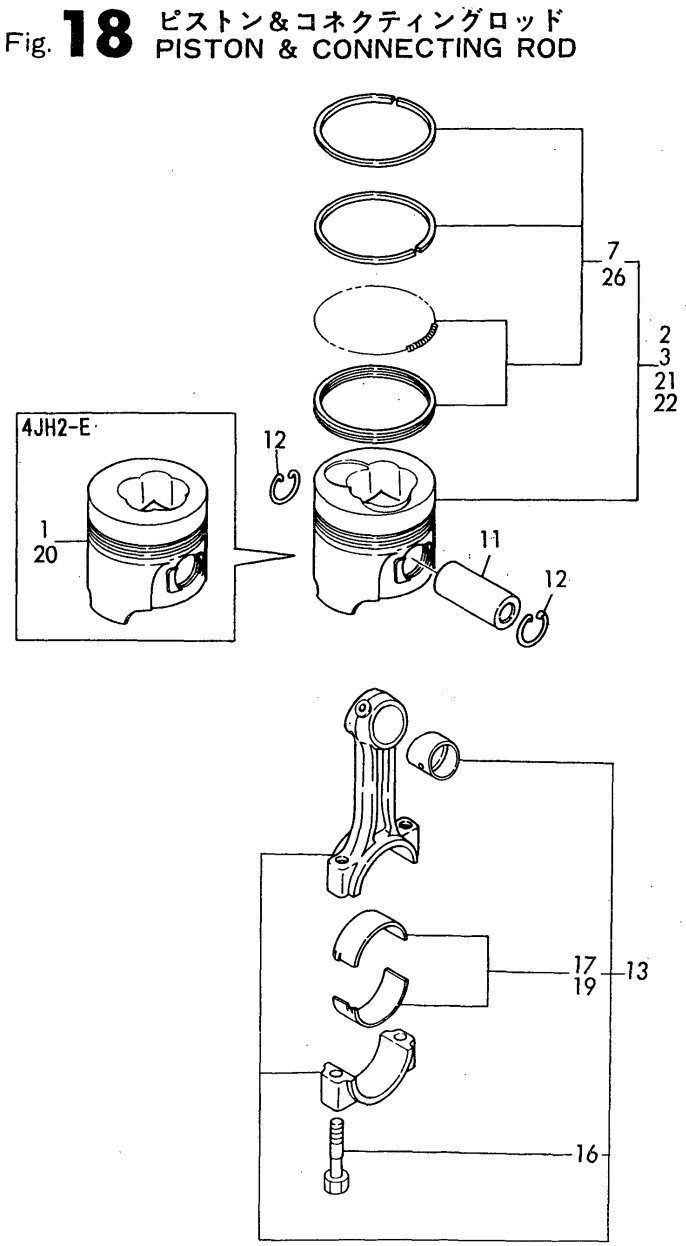

Remarks
1) UNDER-SIZED METAL(0.25)
2) OVER SIZE OPTIONAL PARTS

(A)=4JH2E
(B)=4JH2-TE
(C)=4JH2-HTE
(D)=4JH2-DTE
(E)=4JH2-UTE(B)
(F)=

No.	Lev.	Parts No.	Description	Q'ty (A)	(B)	(C)	(D)	(E)	(F)	I	R
1	1	129570-22000	PISTON ASSY	4							
2	1	129572-22000	PISTON ASSY		4	4					
3	1	129573-22000	PISTON ASSY				4	4			
7	2	729573-22500	RING SET, PISTON	4	4	4	4	4			
11	1	129573-22300	PIN, PISTON D28 L69	4	4	4	4	4			
12	1	22252-000280	RING, 28	8	8	8	8	8			
13	1	729573-23700	ROD ASSY, CONNECTING	4	4	4	4	4			
16	2	121550-23200	BOLT, CONNECTING ROD	8	8	8	8	8			
17	2	729150-23600	BEARING, CRANK PIN	4	4	4	4	4			
19	1	129150-23610	BEARING, 0.25 US	4	4	4	4	4			1
20	1	129570-22500	PISTON ASSY, 0.25 OS	4							2
21	1	129572-22500	PISTON ASSY, 0.25 OS		4	4					2
22	1	129573-22500	PISTON ASSY, 0.25 OS				4	4			2
26	2	729573-22540	RING SET, 0.25 OS	4	4	4	4	4			2

N:Old $\overset{\text{Yes}}{\underset{\text{No}}{\leftrightarrows}}$ New, Q:Old $\overset{\text{No}}{\underset{\text{Yes}}{\leftrightarrows}}$ New, R:Old $\overset{\text{Yes}}{\underset{\text{Yes}}{\leftrightarrows}}$ New, S:Old $\overset{\text{No}}{\underset{\text{No}}{\leftrightarrows}}$ New, W:Add, Z:Discontinued, F:Interchangeable by set, K:Q'ty Change

Copyright (C) YANMAR CO., LTD. All RightsReserved.

Fig.19. LUB.OIL COOLER

Fig. 19 LOクーラ
LUB. OIL COOLER

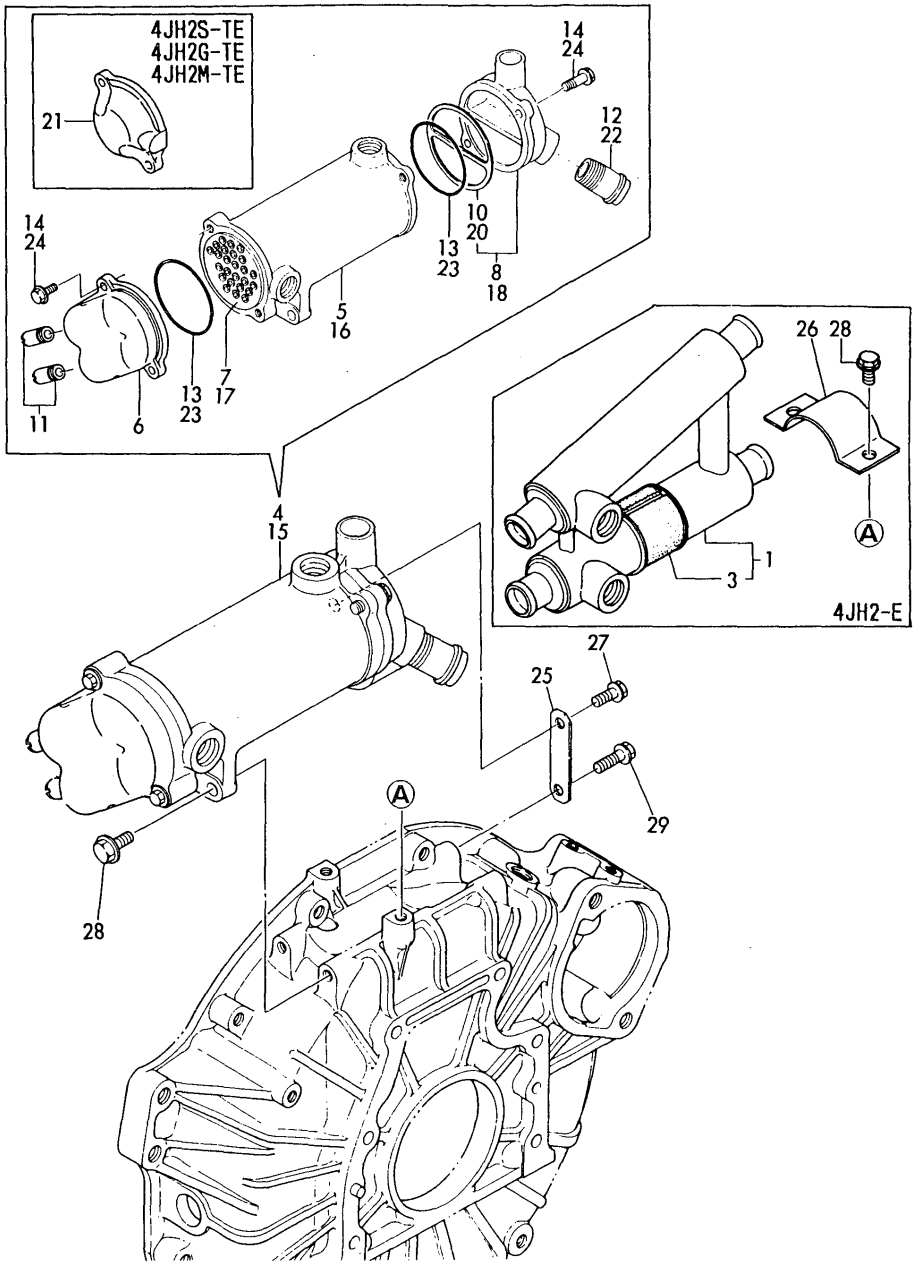

(A)=4JH2E
(B)=4JH2-TE
(C)=4JH2-HTE
(D)=4JH2-DTE
(E)=4JH2-UTE(B)
(F)=

No.	Lev.	Parts No.	Description	Q'ty (A)	(B)	(C)	(D)	(E)	(F)	I	R
1	1	129470-33000	COOLER ASSY, OIL	1							
3	2	129470-33550	SEAT, RUBBER	1							
4	1	129474-33000	COOLER ASSY, OIL		1	1	1	1			1
5	2	129474-33010	BODY, OIL COOLER		1	1	1	1			
6	2	129474-33030	COVER, B		1	1	1	1			
7	2	129474-33040	CORE ASSY, COOLER		1	1	1	1			
8	2	129474-33050	COVER ASSY		1	1	1	1			
10	3	120322-33050	GASKET		1	1	1	1			
11	2	104271-49060	JOINT, PIPE		2	2	2	2			
12	2	123325-49421	JOINT, PIPE		1	1	1	1			
13	2	24321-000750	O-RING, 1AG75.0		2	2	2	2			
14	2	26106-080252	BOLT, M8X 25 PLATED		4	4	4	4			
15	1	129499-33000	COOLER ASSY, OIL		1						2
16	2	129474-33010	BODY, OIL COOLER		1						
17	2	129474-33040	CORE ASSY, COOLER		1						
18	2	129474-33050	COVER ASSY		1						
20	3	120322-33050	GASKET		1						
21	2	129470-44450	COVER, B		1						
22	2	123325-49421	JOINT, PIPE		1						
23	2	24321-000750	O-RING, 1AG75.0		2						
24	2	26106-080252	BOLT, M8X 25 PLATED		4						
25	1	129474-33500	RETAINER		1	1	1	1			
26	1	129470-33510	RETAINER	1							
27	1	26106-080142	BOLT, M8X 14 PLATED		1	1	1	1			
28	1	26106-080162	BOLT, M8X 16 PLATED	2	2	2	2	2			
29	1	26106-080252	BOLT, M8X 25 PLATED		1	1	1	1			

N:Old $\frac{\text{Yes}}{\text{No}}$ New, Q:Old $\frac{\text{No}}{\text{Yes}}$ New, R:Old $\frac{\text{Yes}}{\text{Yes}}$ New, S:Old $\frac{\text{No}}{\text{No}}$ New, W:Add, Z:Discontinued, F:Interchangeable by set, K:Q'ty Change

Copyright (C) YANMAR CO., LTD. All RightsReserved.

Fig.20. LUB. OIL SYSTEM

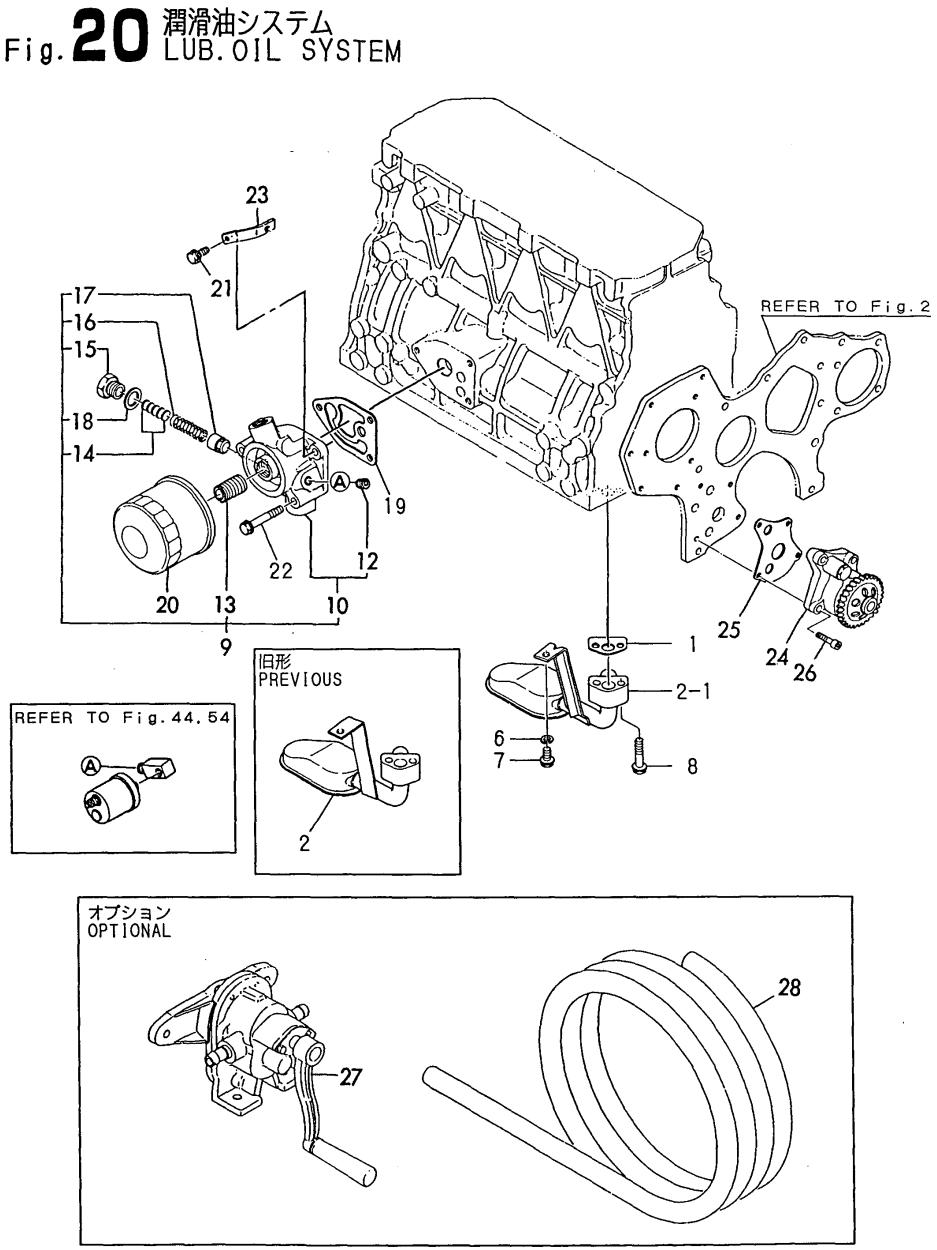

Remarks
(1)Optional parts.
(2)Fig.21 No.4-1(or 7-1) interchangeable by set.

(A)=4JH2E (D)=4JH2-DTE
(B)=4JH2-TE (E)=4JH2-UTE(B)
(C)=4JH2-HTE (F)=

No.	Lev.	Parts No.	Description	Q'ty (A)	(B)	(C)	(D)	(E)	(F)	I	R
1	1	129150-35040	GASKET				1				
1-1	1	129470-35040	GASKET (D=E31928)	1	1	1	1	1		N	
2	1	129473-35090	PIPE ASSY, OIL INLET	1	1	1	1	1			
2-1	1	129473-35091	PIPE ASSY, OIL INLET (A=E/#10589) (B=E/#15575) (C=E/#23963) (D=E/#36341) (E=E/#42069)	1	1	1	1	1		N	
6	1	22217-080000	WASHER, SPRING 8	1	1	1	1	1			
7	1	26106-080142	BOLT, M8X 14 PLATED	1	1	1	1	1			
8	1	26106-080352	BOLT, M8X 35 PLATED	2	2	2	2	2			
9	1	129470-35100	BRACKET ASSY, FILTER	1	1	1	1	1			
9-1	1	129470-35101	BRACKET ASSY, FILTER (A=*1991.01.) (B=*1991.01.) (C=*1991.01.) (D=*1991.01.) (E=*1991.01.)	1	1	1	1	1		F	2
10	2	129470-35130	BRACKET ASSY	1	1	1	1	1			
10-1	2	129470-35131	BRACKET ASSY (A=*1991.01.) (B=*1991.01.) (C=*1991.01.) (D=*1991.01.) (E=*1991.01.)	1	1	1	1	1		F	2
12	3	23871-020000	PLUG, R02	1	1	1	1	1			
13	2	129100-35140	BOLT, STUD	1	1	1	1	1			
14	2	121850-35200	SHIM SET	1	1	1	1	1			
15	2	124223-35510	RETAINER, SPRING	1	1	1	1	1			
16	2	121850-35520	SPRING	1	1	1	1	1			
17	2	121850-35531	VALVE, CONTROL	1	1	1	1	1			
18	2	23414-180000	GASKET, 18X1.0	1	1	1	1	1			
19	1	129470-35120	GASKET				1				
19-1	1	129470-35121	GASKET (D=E/#31928)	1	1	1	1	1		N	
20	1	129150-35150	FILTER 90X80L	1	1	1	1	1			
21	1	26106-080202	BOLT, M8X 20 PLATED	1	1	1	1	1			
22	1	26106-080552	BOLT, M8X 55 PLATED	2	2	2	2	2			
23	1	129590-59200	RETAINER, PIPE (B=E/#XXX) (C=E/#XXX) (D=E/#XXX) (E=E/#XXX)		1	1	1	1		W	
24	1	129470-32000	PUMP ASSY, OIL	1	1	1	1	1			
25	1	129150-32020	GASKET, PUMP	1	1	1	1	1			
26	1	26450-060252	BOLT, M6X 25	4	4	4	4	4			
27	1	124413-39100	PUMP ASSY, WASTE	1	1	1	1	1			1
28	1	43720-001220	PIPE	1	1	1	1	1			1

N:Old $\xleftarrow[\text{No}]{\text{Yes}}$ New, Q:Old $\xleftarrow[\text{Yes}]{\text{No}}$ New, R:Old $\xleftarrow[\text{Yes}]{\text{Yes}}$ New, S:Old $\xleftarrow[\text{No}]{\text{No}}$ New, W:Add, Z:Discontinued, F:Interchangeable by set, K:Q'ty Change

Copyright (C) YANMAR CO., LTD. All RightsReserved.

Fig.21. LUB. OIL PIPE

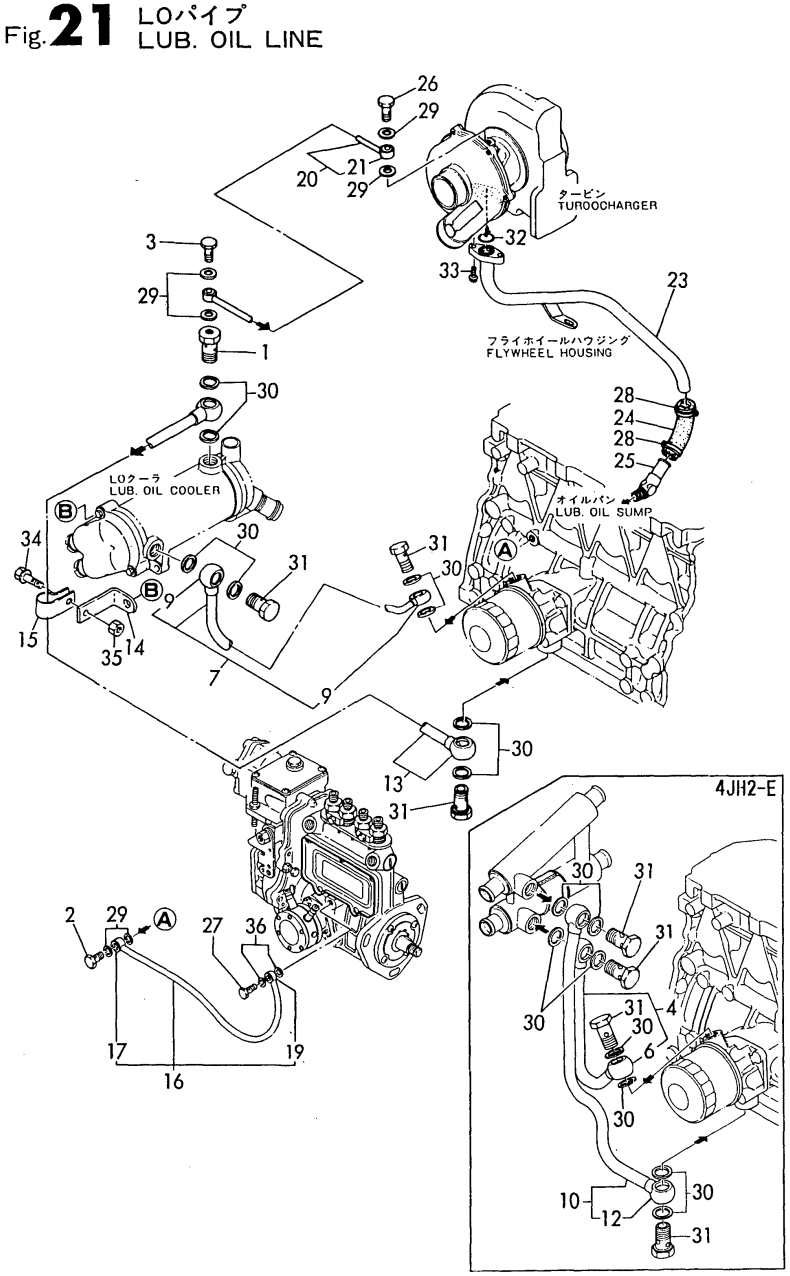

(A)=4JH2E (D)=4JH2-DTE
(B)=4JH2-TE (E)=4JH2-UTE(B)
(C)=4JH2-HTE (F)=

No.	Lev.	Parts No.	Description	Q'ty (A)	(B)	(C)	(D)	(E)	(F)	I	R
1	1	129472-39020	BOLT, M20XM10		1	1	1	1			
2	1	124160-39140	BOLT, PIPE JOINT M10	1	1	1	1	1			
3	1	121252-39150	BOLT, JOINT M10X1.5		1	1	1				
4	1	129470-39200	PIPE ASSY, OIL	1							
4-1	1	129470-39201	PIPE ASSY, OIL	1						F	1
	(A=*1990.12.)										
6	2	23341-150000	JOINT, PIPE 15-20	2							
7	1	129474-39200	PIPE ASSY, OIL		1	1	1	1			
7-1	1	129474-39201	PIPE ASSY, OIL		1	1	1	1		F	1
		(B=*1990.12.)	(C=*1990.12.) (D=*1990.12.)	(E=*1990.12.)							
9	2	23341-150000	JOINT, PIPE 15-20		2	2	2	2			
10	1	129470-39300	PIPE ASSY, OIL	1							
12	2	23341-150000	JOINT, PIPE 15-20	2							
13	1	129495-39320	PIPE ASSY, OIL		1	1	1	1			
14	1	129495-39350	STAY		1	1	1	1			
15	1	129495-39360	RETAINER		1	1	1	1			
16	1	129470-39451	PIPE ASSY, OIL	1	1	1	1				
17	2	135210-39140	JOINT, PIPE	1	1	1	1				
19	2	120220-59150	JOINT	1	1	1	1				
20	1	129474-39450	PIPE ASSY, OIL		1	1	1	1			
21	2	129553-39190	JOINT		2	2	2	2			
23	1	129472-39600	PIPE, OIL		1	1	1	1			
24	1	129792-39610	JOINT, RUBBER		1	1	1	1			
25	1	129472-39620	ELBOW, PT3/8		1	1	1	1			
26	1	124413-39710	BOLT, PIPE JOINT M10		1	1	1	1			
27	1	124550-59820	BOLT, PIPE JOINT M8	1	1	1	1				
28	1	23000-025000	CLAMP, 25		2	2	2	2			
29	1	23414-100000	GASKET, 10X1.0	2	6	6	6	4			
30	1	23414-200000	GASKET, 20X1.0	8	8	8	8	8			
31	1	23857-150000	BOLT, JOINT 15	4	3	3	3	3			
32	1	24314-000180	O-RING, 4CP18.0		1	1	1	1			
33	1	26106-060162	BOLT, M6X 16 PLATED		2	2	2	2			
34	1	26106-060202	BOLT, M6X 20 PLATED		1	1	1	1			
35	1	26756-060002	NUT, LOCK M6		1	1	1	1			
36	1	43400-500410	SEAL WASHER 8S	2	2	2	2				

Remarks
(1)Fig.20 No.10-1 interchangeable by set.

N:Old $\xleftarrow[\text{No}]{\text{Yes}}$ New, Q:Old $\xleftarrow[\text{Yes}]{\text{No}}$ New, R:Old $\xleftarrow[\text{Yes}]{\text{Yes}}$ New, S:Old $\xleftarrow[\text{No}]{\text{No}}$ New, W:Add, Z:Discontinued, F:Interchangeable by set, K:Q'ty Change

Copyright (C) YANMAR CO., LTD. All RightsReserved.

Fig.22. COOLING SEA WATER PUMP

Fig. 22 カイスイポンプ COOLING SEA WATER PUMP

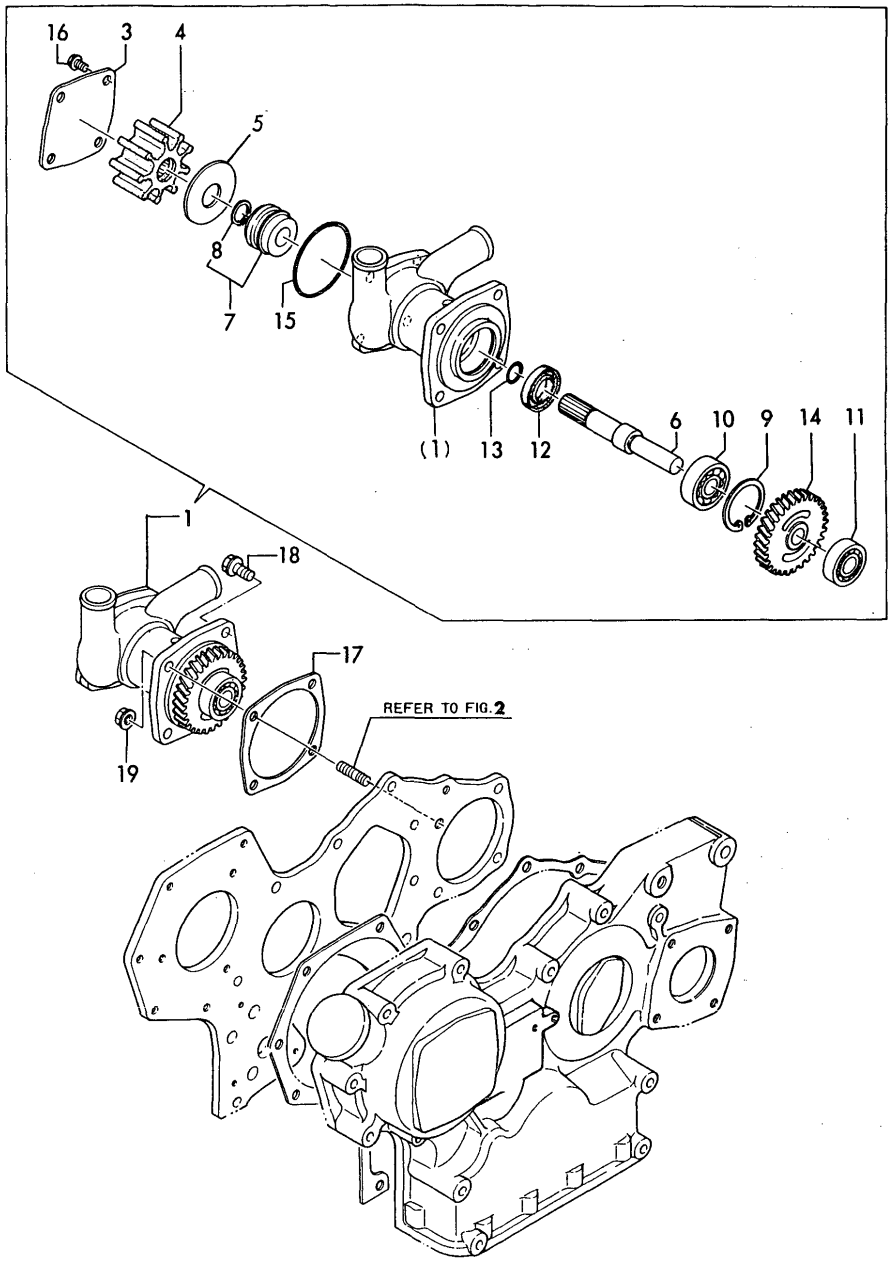

(A)=4JH2E (D)=4JH2-DTE
(B)=4JH2-TE (E)=4JH2-UTE(B)
(C)=4JH2-HTE (F)=

No.	Lev.	Parts No.	Description	Q'ty (A)	(B)	(C)	(D)	(E)	(F)	I	R
1	1	129573-42500	PUMP ASSY, WATER	1	1	1	1	1			
3	2	129470-42520	COVER	1	1	1	1	1			
4	2	129470-42530	IMPELLER	1	1	1	1	1			
5	2	129573-42540	PLATE	1	1	1	1	1			
6	2	129470-42550	SHAFT	1	1	1	1	1			
7	2	129795-42670	SEAL	1	1	1	1	1			
8	3	145410-46190	CIRCLIP	1	1	1	1	1			
9	2	22252-000420	RING, 42	1	1	1	1	1			
10	2	24101-063024	BEARING, BALL 6302	1	1	1	1	1			
11	2	24101-062024	BEARING, BALL 6202	1	1	1	1	1			
12	2	24421-203508	SEAL, OIL TC203508	1	1	1	1	1			
13	2	24311-000150	O-RING, 1AP15.0	1	1	1	1	1			
14	2	129470-42700	GEAR	1	1	1	1	1			
15	2	24341-000600	O-RING, 1AS60.0	1	1	1	1	1			
16	2	26203-060102	BOLT, M6X 10 PLATED	4	4	4	4	4			
17	1	129150-01880	GASKET				1				
17-1	1	129470-01880	GASKET, GEAR CASE (D=E31928)	1	1	1	1	1		N	
17-2	1	129150-01881	GASKET	1	1	1	1	1		R	
	(A=*1991.01)	(B=*1991.01)	(C=*1991.01) (D=*1991.01)	(E=*1991.01)							
18	1	26106-080162	BOLT, M8X 16 PLATED	3	3	3	3	3			
19	1	26366-080002	NUT, M8	1	1	1	1	1			

N:Old ◄Yes/No► New, Q:Old ◄No/Yes► New, R:Old ◄Yes/Yes► New, S:Old ◄No/No► New, W:Add, Z:Discontinued, F:Interchangeable by set, K:Q'ty Change

Copyright (C) YANMAR CO., LTD. All RightsReserved.

Fig.23. COOLING FRESH WATER PUMP

Fig. 23 セイスイポンプ COOLING FRESH WATER PUMP

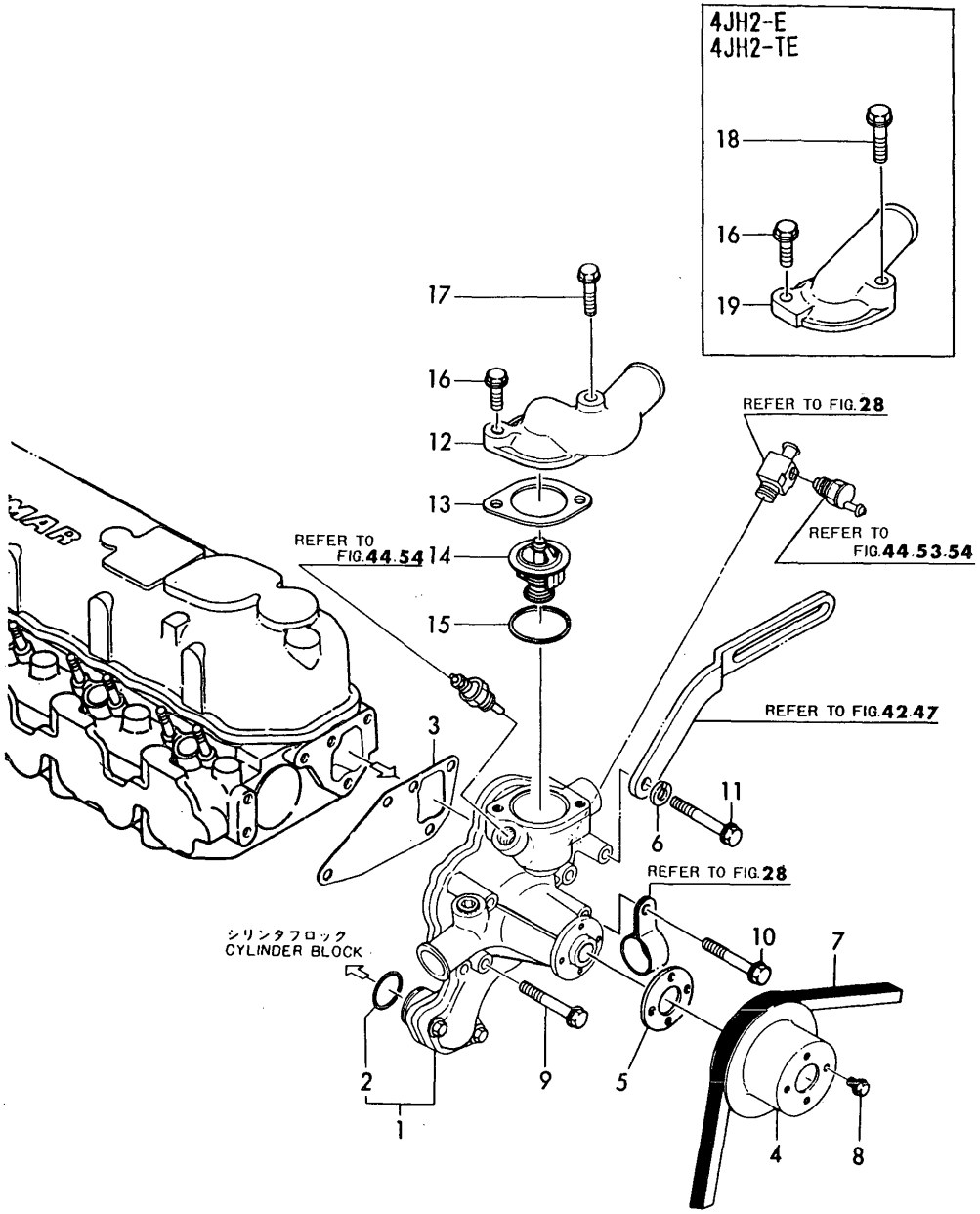

(A)=4JH2E (D)=4JH2-DTE
(B)=4JH2-TE (E)=4JH2-UTE(B)
(C)=4JH2-HTE (F)=

No.	Lev.	Parts No.	Description	Q'ty (A)	(B)	(C)	(D)	(E)	(F)	I	R
1	1	129470-42000	PUMP ASSY, WATER	1	1	1	1	1			
1-1	1	129470-42001	PUMP ASSY, WATER	1	1	1	1	1		N	
	(A=*1991.01)	(B=*1991.01)	(C=*1991.01) (D=*1991.01)	(E=*1991.01)							
2	2	129150-42320	O-RING	1	1	1	1	1			
3	1	129150-42020	GASKET, WATER PUMP	1	1	1	1	1			
4	1	129550-42350	V-PULLEY, D=120	1	1	1	1	1			
5	1	129156-44760	WASHER	1	1	1	1	1			
6	1	22217-080000	WASHER, SPRING 8	1	1	1	1	1			
7	1	25132-004600	V-BELT, A46	1	1	1	1	1			
8	1	26106-060102	BOLT, M6X 10 PLATED	4	4	4	4	4			
9	1	26106-080552	BOLT, M8X 55 PLATED	2	2	2	2	2			
10	1	26106-080602	BOLT, M8X 60 PLATED	1	1	1	1	1			
11	1	26106-080652	BOLT, M8X 65 PLATED	1	1	1	1	1			
12	1	129573-49540	COVER, THERMOSTAT			1	1	1			
13	1	129795-49550	GASKET				1				
13-1	1	129470-49550	GASKET (D=E31928)	1	1	1	1	1		N	
14	1	129470-49801	THERMOSTAT, 76.5	1	1	1	1	1			
15	1	129150-49810	GASKET, THERMOSTAT				1				
15-1	1	129470-49810	GASKET, THERMOSTAT (D=E31928)	1	1	1	1	1		N	
16	1	26106-080252	BOLT, M8X 25 PLATED	1	1	1	1	1			
17	1	26106-080502	BOLT, M8X 50 PLATED			1	1	1			
18	1	26106-080352	BOLT, M8X 35 PLATED	1	1						
19	1	129470-49540	COVER, THERMOSTAT	1	1						

N:Old ←Yes/No→ New, Q:Old ←No/Yes→ New, R:Old ←Yes/Yes→ New, S:Old ←No/No→ New, W:Add, Z:Discontinued, F:Interchangeable by set, K:Q'ty Change

Copyright (C) YANMAR CO., LTD. All RightsReserved.

Fig.24. COOLING FRESH WATER COOLER

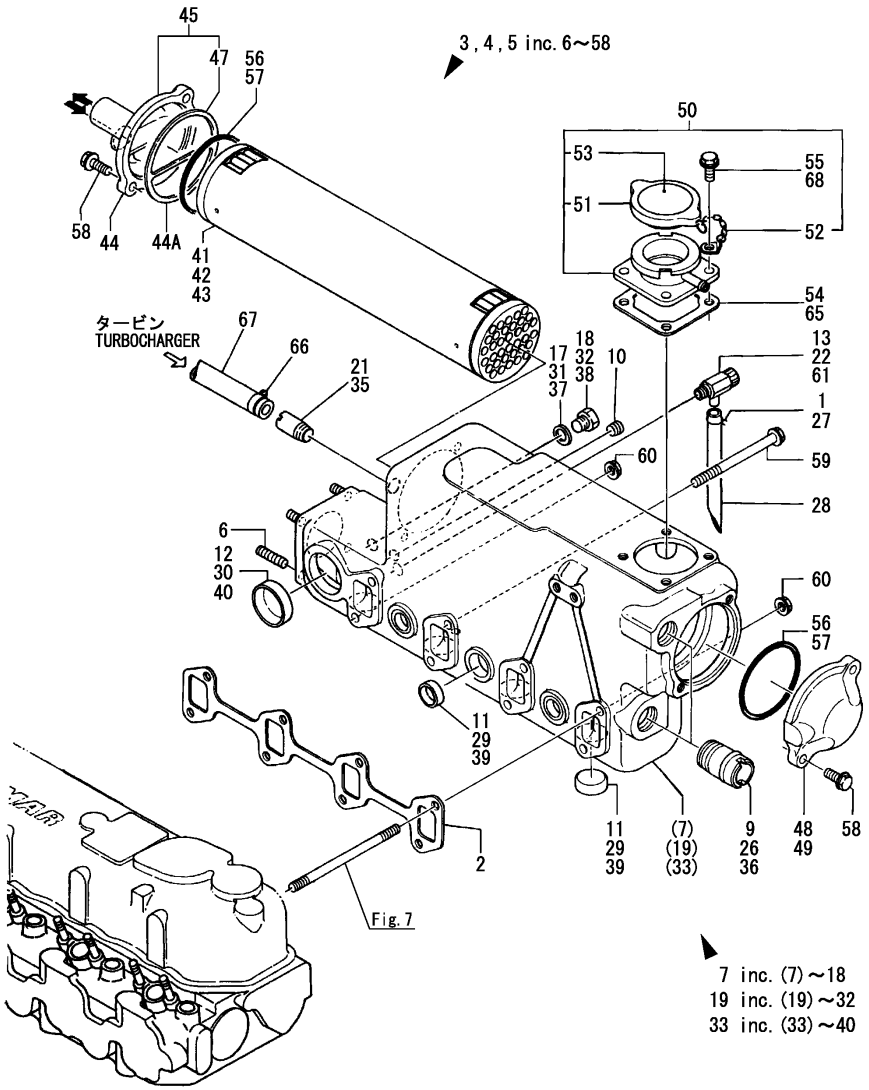

(A)=4JH2E (D)=4JH2-DTE
(B)=4JH2-TE (E)=4JH2-UTE(B)
(C)=4JH2-HTE (F)=

No.	Lev.	Parts No.	Description	Q'ty (A)	(B)	(C)	(D)	(E)	(F)	I	R
1	1	124000-03300	CLIP, HOSE 13	1							
2	1	129550-13110	GASKET	1	1	1	1	1			
3	1	729470-44501	COOLER ASSY, WATER	1							
3-1	1	129470-44900	COOLER ASSY, WATER	1						N	
	(A=*1991.01)										
4	1	729473-44501	COOLER ASSY, WATER		1						
4-1	1	129473-44900	COOLER ASSY, WATER		1					N	
		(B=*1991.01)									
5	1	729573-44501	COOLER ASSY, WATER			1	1	1			
5-1	1	129573-44900	COOLER ASSY, WATER			1	1	1		N	
			(C=*1991.01) (D=*1991.01) (E=*1991.01)								
6	2	128170-13600	STUD, M8X31	4	4	4	4	4			
7	2	129470-44000	COOLER ASSY, WATER	1							
9	3	124160-49480	JOINT, PIPE	2							
10	3	23871-030000	PLUG, R03	1							
11	3	27241-280000	PLUG, 28	7							
12	3	27241-400000	PLUG, 40	1							
13	3	43600-500310	COCK	1							
17	3	23414-170000	GASKET, 17X1.0	1						W	
	(A=E09456)										
18	3	23893-030002	PLUG, G3/8	1						W	
	(A=E09456)										
19	2	129473-44000	COOLER ASSY, WATER		1						
21	3	129474-44480	JOINT		1						
21-1	3	104407-44480	JOINT		1					N	
		(B=*1991.01)									
22	3	120130-49350	COCK, 1/4		1						
26	3	124160-49480	JOINT, PIPE		2						
27	3	124460-77680	RETAINER		1						
28	3	23061-070300	PIPE, 7X 300		1						
29	3	27241-280000	PLUG, 28		7						
30	3	27241-400000	PLUG, 40		1						
31	3	23414-170000	GASKET, 17X1.0		1					W	
		(B=E15101)									
32	3	23893-030002	PLUG, G3/8		1					W	
		(B=E15101)									
33	2	129573-44001	COOLER ASSY, WATER			1	1	1			
35	3	129474-44480	JOINT			1	1	1			
35-1	3	104407-44480	JOINT			1	1	1		N	
			(C=*1991.01) (D=*1991.01) (E=*1991.01)								
36	3	124160-49480	JOINT, PIPE			2	2	2			
37	3	23414-170000	GASKET, 17X1.0			1	1	1			
38	3	23893-030002	PLUG, G3/8			1	1	1			
39	3	27241-280000	PLUG, 28			7	7	7			
40	3	27241-400000	PLUG, 40			1	1	1			
41	2	129470-44110	CORE ASSY, COOLER	1							
42	2	129473-44111	CORE ASSY, COOLER		1						
43	2	129573-44111	CORE ASSY, COOLER			1	1	1			
44	2	129470-44440	COVER, A	1	1						
44A	2	120322-33050	GASKET	1	1					W	
	(A=FROM 1ST)		(B=FROM 1ST)								

N:Old $\overset{\text{Yes}}{\underset{\text{No}}{\leftrightarrow}}$ New, Q:Old $\overset{\text{No}}{\underset{\text{Yes}}{\leftrightarrow}}$ New, R:Old $\overset{\text{Yes}}{\underset{\text{Yes}}{\leftrightarrow}}$ New, S:Old $\overset{\text{No}}{\underset{\text{No}}{\leftrightarrow}}$ New, W:Add, Z:Discontinued, F:Interchangeable by set, K:Q'ty Change

++ CONTINUE ++

Copyright (C) YANMAR CO., LTD. All RightsReserved.

Fig.24. COOLING FRESH WATER COOLER

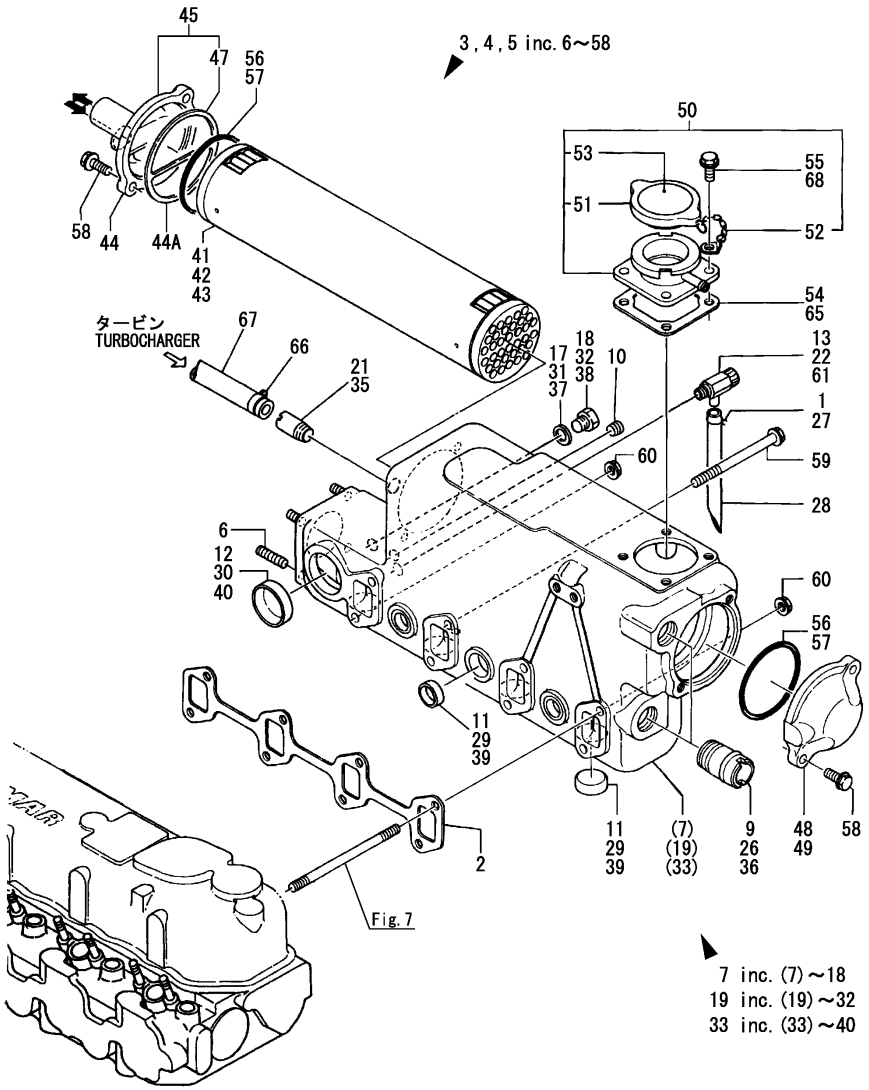

(A)=4JH2E
(B)=4JH2-TE
(C)=4JH2-HTE
(D)=4JH2-DTE
(E)=4JH2-UTE(B)
(F)=

No.	Lev.	Parts No.	Description	Q'ty (A)	(B)	(C)	(D)	(E)	(F)	I	R
45	2	129573-44440	COVER ASSY, COOLER			1	1	1			
47	3	129573-44470	GASKET, COOLER			1	1	1			
48	2	129470-44450	COVER, B	1	1						
49	2	129573-44450	COVER, COOLER			1	1	1			
50	2	120445-44600	FILLER ASSY	1	1	1	1	1			
51	3	123682-44210	CAP, RADIATOR	1	1	1	1	1			
52	3	123682-44220	CHAIN	1	1	1	1	1			
53	3	120445-44620	LABEL, CAUTION	1	1	1	1	1			
54	2	120445-44640	GASKET	1	1	1	1	1			
55	2	26106-080142	BOLT, M8X 14 PLATED	4	4	4	4	4			
56	2	24321-000750	O-RING, 1AG75.0	2	2						
57	2	24321-000800	O-RING, 1AG80.0			2	2	2			
58	2	26106-080252	BOLT, M8X 25 PLATED	4	4	4	4	4			
59	1	26106-081002	BOLT, M8X100 PLATED	6	6	6	6	6			
60	1	26366-080002	NUT, M8	2	2	2	2	2			
61	1	43600-500310	COCK		1	1	1	1			
65	1	120445-44640	GASKET	1	1	1	1	1			
66	1	23010-017000	CLAMP, 17		1	1	1	1			
67	1	23061-120300	PIPE, 12X 300	1	1	1	1	1			
68	1	26106-080162	BOLT, M8X 16 PLATED	4	4	4	4	4			

N:Old ◄Yes/No► New, Q:Old ◄No/Yes► New, R:Old ◄Yes/Yes► New, S:Old ◄No/No► New, W:Add, Z:Discontinued, F:Interchangeable by set, K:Q'ty Change

Copyright (C) YANMAR CO., LTD. All RightsReserved.

Fig.25. COOLING SEA WATER PIPE(4JH2-HTE,DTE,UTE)

(A)=4JH2E
(B)=4JH2-TE
(C)=4JH2-HTE
(D)=4JH2-DTE
(E)=4JH2-UTE(B)
(F)=

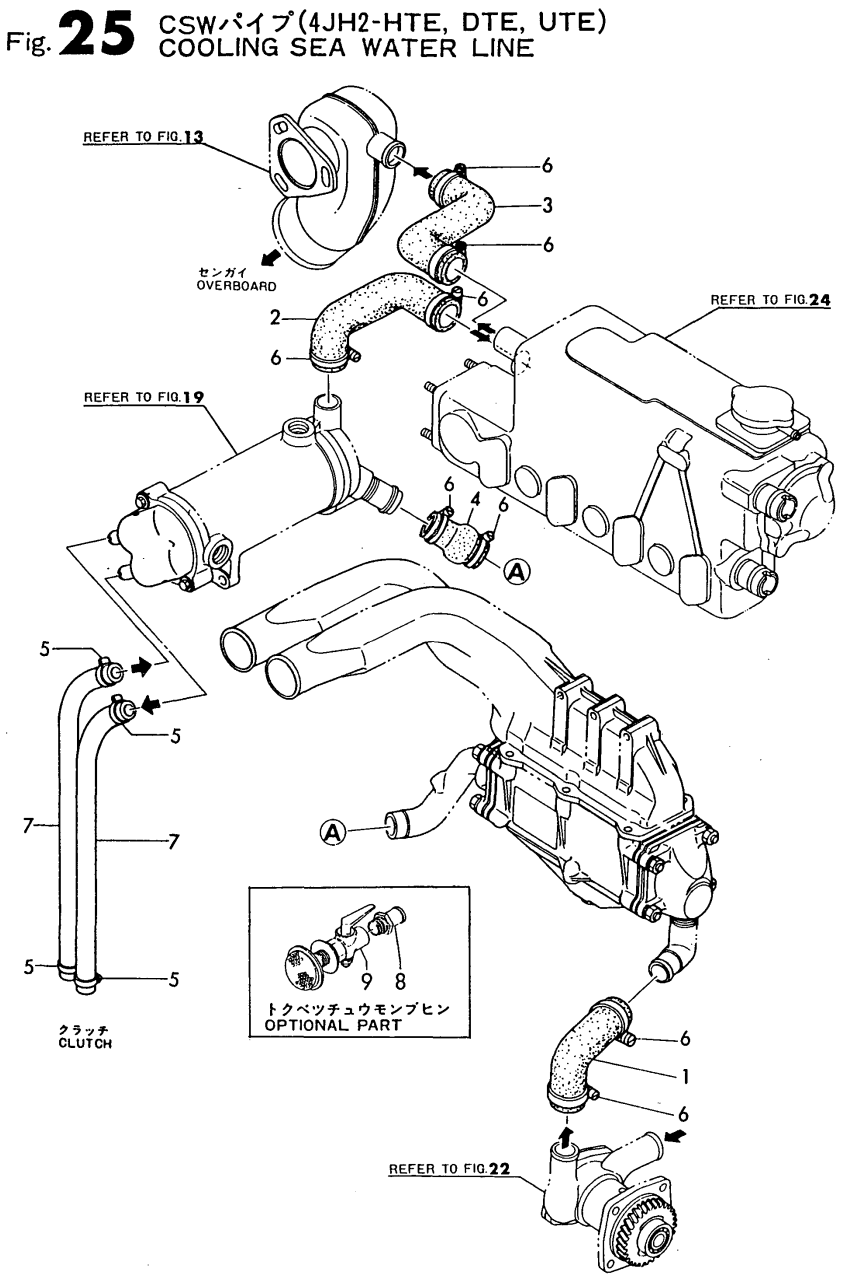

No.	Lev.	Parts No.	Description	Q'ty (A)	(B)	(C)	(D)	(E)	(F)	I	R
1	1	129474-49010	PIPE, WATER			1	1	1			
2	1	129474-49030	PIPE, WATER			1	1	1			
3	1	129472-49040	PIPE, WATER			1	1	1			
4	1	129474-49110	JOINT, RUBBER			1	1	1			
5	1	23000-022000	CLAMP, 22			4	4	4			
6	1	23000-035000	CLAMP, 35			8	8	8			
7	1	23072-040300	HOSE, 4X 300			2	2	2			
8	1	43530-500570	JOINT			1	1	1			1
9	1	43662-025030	COCK ASSY, SEA WATER			1	1	1			1

Remarks
1)OPTIONAL PART

N:Old $\overset{\text{Yes}}{\underset{\text{No}}{\leftrightarrow}}$ New, Q:Old $\overset{\text{No}}{\underset{\text{Yes}}{\leftrightarrow}}$ New, R:Old $\overset{\text{Yes}}{\underset{\text{Yes}}{\leftrightarrow}}$ New, S:Old $\overset{\text{No}}{\underset{\text{No}}{\leftrightarrow}}$ New, W:Add, Z:Discontinued, F:Interchangeable by set, K:Q'ty Change

Copyright (C) YANMAR CO., LTD. All RightsReserved.

Fig.26. COOLING SEA WATER PIPE(4JH2E)

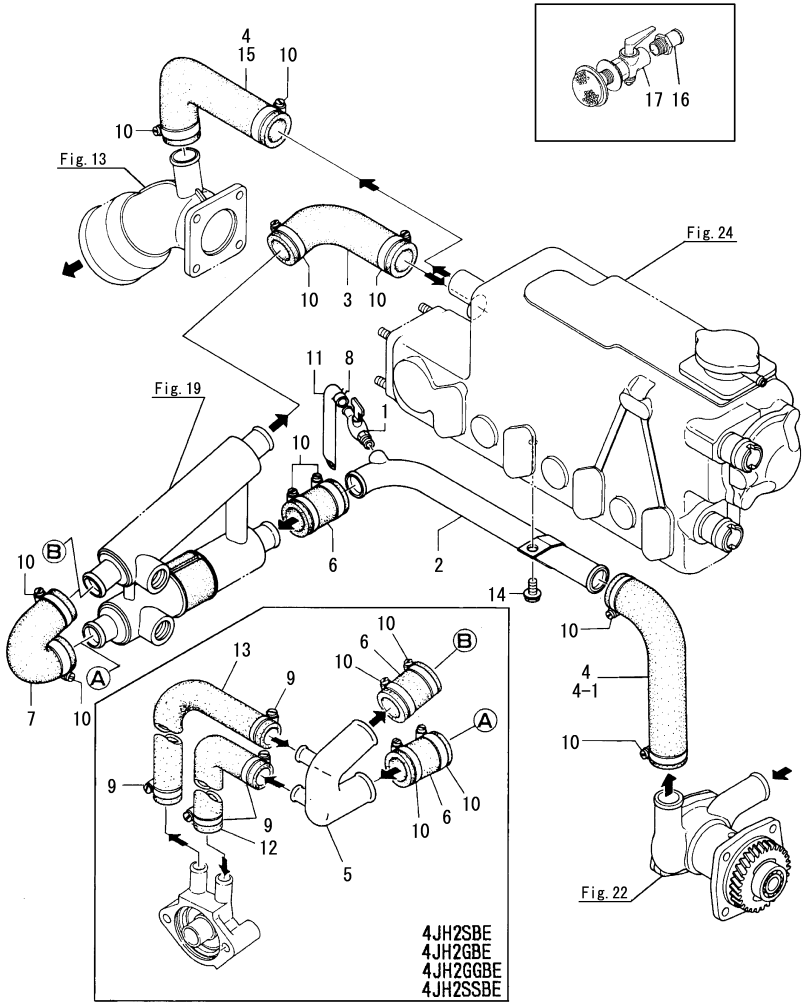

(A)=4JH2E (D)=4JH2-DTE
(B)=4JH2-TE (E)=4JH2-UTE(B)
(C)=4JH2-HTE (F)=

No.	Lev.	Parts No.	Description	Q'ty (A)	(B)	(C)	(D)	(E)	(F)	I	R
1	1	128695-44090	COCK	1							
2	1	129470-49010	PIPE, WATER	1							
3	1	129470-49030	PIPE, C. SEA WATER	1							
4	1	129470-49040	PIPE, WATER	2							
4-1	1	129470-49040	PIPE, WATER	1						K	
	(A=*1989.11)										
5	1	129470-49060	PIPE, WATER	1							
6	1	129470-49110	JOINT, 25X55	3							
7	1	129470-49240	JOINT, RUBBER 28	1							
8	1	124722-59050	CLIP, HOSE 9	1							
9	1	23000-022000	CLAMP, 22	4							
10	1	23000-035000	CLAMP, 35	12							
11	1	23061-070300	PIPE, 7X 300	1							
12	1	23072-040300	HOSE, 4X 300	1							
13	1	23072-040350	HOSE, 4X 350	1							
14	1	26106-080162	BOLT, M8X 16 PLATED	1							
15	1	129475-49040	PIPE, WATER	1						W	
	(A=*1989.11)										
16	1	43530-500570	JOINT	1							1
17	1	43662-025030	COCK ASSY, SEA WATER	1							1

Remarks
(1)Optional parts.

N:Old $\overset{\text{Yes}}{\underset{\text{No}}{\leftrightarrows}}$ New, Q:Old $\overset{\text{No}}{\underset{\text{Yes}}{\leftrightarrows}}$ New, R:Old $\overset{\text{Yes}}{\underset{\text{Yes}}{\leftrightarrows}}$ New, S:Old $\overset{\text{No}}{\underset{\text{No}}{\leftrightarrows}}$ New, W:Add, Z:Discontinued, F:Interchangeable by set, K:Q'ty Change

Copyright (C) YANMAR CO., LTD. All RightsReserved.

Fig.27. COOLING SEA WATER PIPE(4JH2-TE)

(A)=4JH2E
(B)=4JH2-TE
(C)=4JH2-HTE
(D)=4JH2-DTE
(E)=4JH2-UTE(B)
(F)=

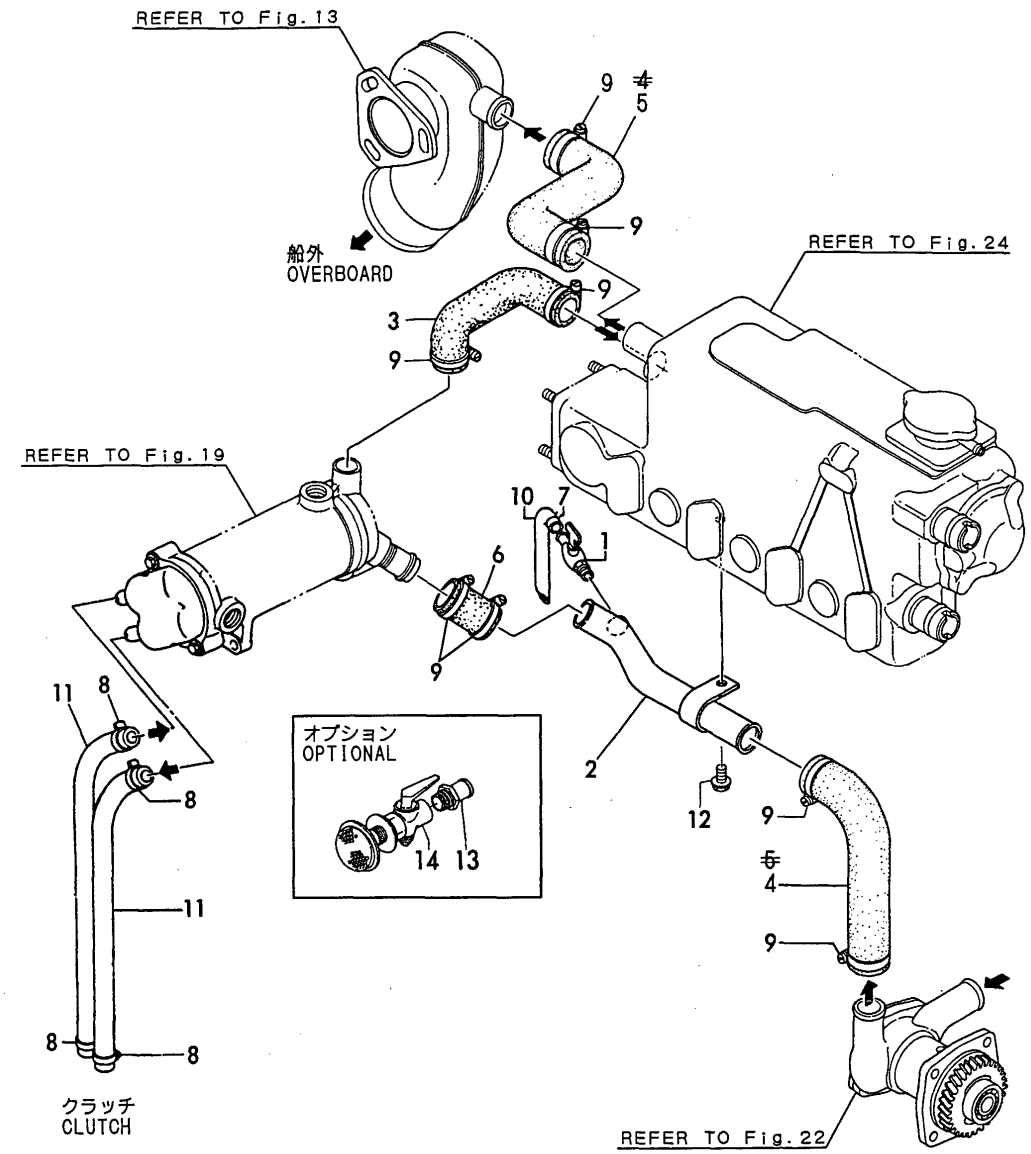

No.	Lev.	Parts No.	Description	Q'ty (A)	(B)	(C)	(D)	(E)	(F)	I	R
1	1	128695-44090	COCK		1						
2	1	129495-49010	PIPE, WATER		1						
3	1	129474-49030	PIPE, WATER		1						
4	1	129470-49040	PIPE, WATER		1						
5	1	129472-49040	PIPE, WATER		1						
6	1	129474-49110	JOINT, RUBBER		1						
7	1	124460-77680	RETAINER		1						
8	1	23000-022000	CLAMP, 22		4						
9	1	23000-035000	CLAMP, 35		8						
10	1	23061-070300	PIPE, 7X 300		1						
11	1	23072-040300	HOSE, 4X 300		2						
12	1	26106-080162	BOLT, M8X 16 PLATED		1						
13	1	43530-500570	JOINT		1						1
14	1	43662-025030	COCK ASSY, SEA WATER		1						1

Remarks
1)OPTIONAL PART

N:Old $\overset{\text{Yes}}{\underset{\text{No}}{\leftrightarrow}}$ New, Q:Old $\overset{\text{No}}{\underset{\text{Yes}}{\leftrightarrow}}$ New, R:Old $\overset{\text{Yes}}{\underset{\text{Yes}}{\leftrightarrow}}$ New, S:Old $\overset{\text{No}}{\underset{\text{No}}{\leftrightarrow}}$ New, W:Add, Z:Discontinued, F:Interchangeable by set, K:Q'ty Change

Copyright (C) YANMAR CO., LTD. All RightsReserved.

Fig.28. COOLING FRESH WATER PIPE

Fig. 28 CFWパイプ COOLING FRESH WATER LINE

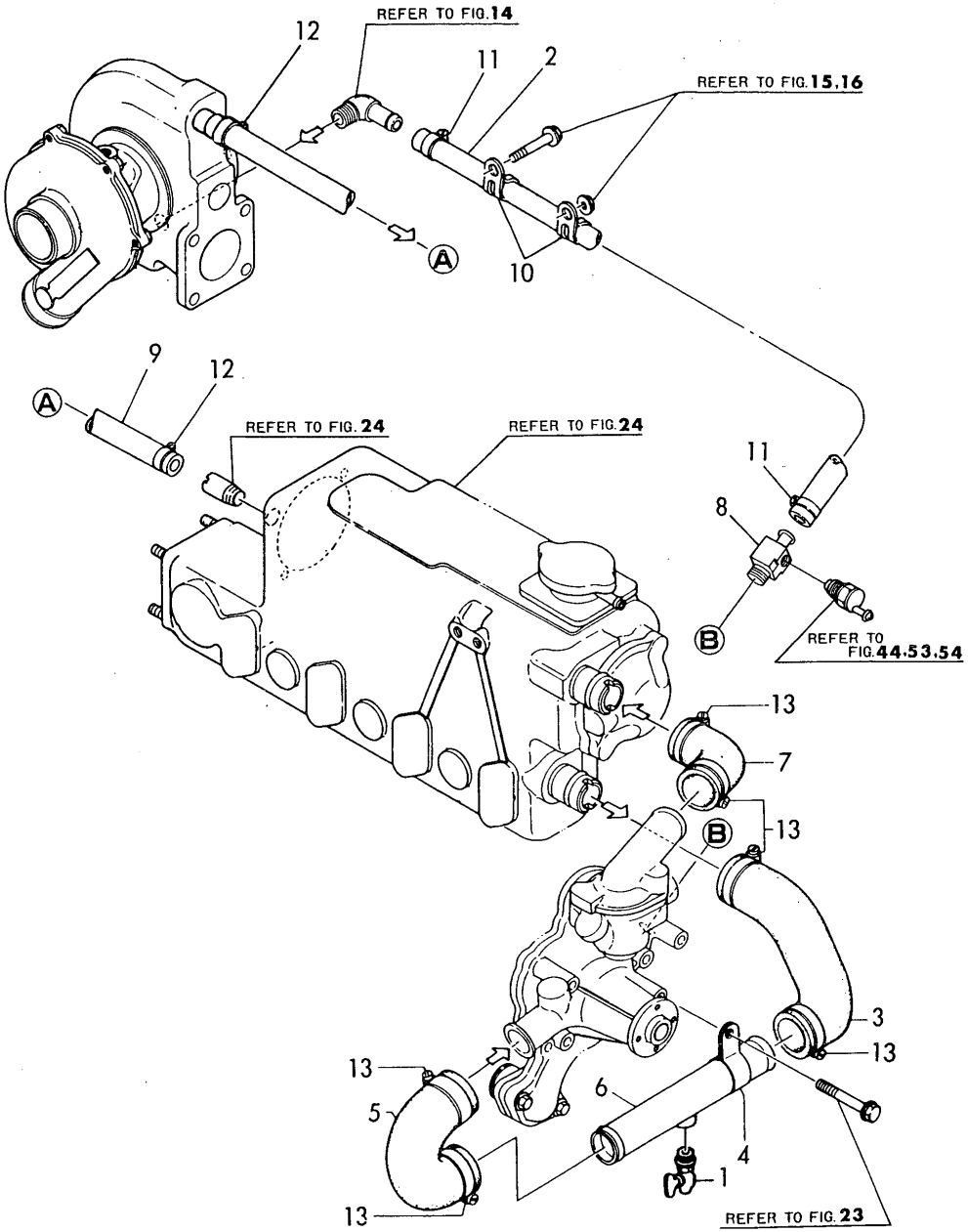

(A)=4JH2E (D)=4JH2-DTE
(B)=4JH2-TE (E)=4JH2-UTE(B)
(C)=4JH2-HTE (F)=

No.	Lev.	Parts No.	Description	Q'ty (A)	(B)	(C)	(D)	(E)	(F)	I	R
1	1	128695-44090	COCK	1	1	1	1	1			
2	1	127420-44560	PIPE, OVERFLOW L=740		1	1	1	1			
3	1	129470-49200	JOINT, RUBBER	1	1	1	1	1			
4	1	129470-49220	RETAINER	1	1	1	1	1			
5	1	129470-49240	JOINT, RUBBER 28	1	1	1	1	1			
6	1	129470-49250	PIPE, WATER	1	1	1	1	1			
7	1	129470-49260	JOINT, RUBBER	1	1	1	1	1			
8	1	129473-49310	JOINT, PT3/8-8		1	1	1	1			
9	1	129474-49320	PIPE, WATER		1	1	1	1			
10	1	194440-51620	CLAMP		2	2	2	2			
11	1	23000-013000	CLAMP, 13		2	2	2	2			
12	1	23000-025000	CLAMP, 25		2	2	2	2			
13	1	23000-041000	CLAMP, 41	6	6	6	6	6			

N:Old ◄Yes/No► New, Q:Old ◄No/Yes► New, R:Old ◄Yes/Yes► New, S:Old ◄No/No► New, W:Add, Z:Discontinued, F:Interchangeable by set, K:Q'ty Change

Copyright (C) YANMAR CO., LTD. All RightsReserved.

Fig.29. FUEL INJECTION PUMP(4JH2-TE,HTE,DTE)

Fig. 29 FOフンシャポンプ(4JH2-TE, HTE, DTE)
FUEL INJECTION PUMP

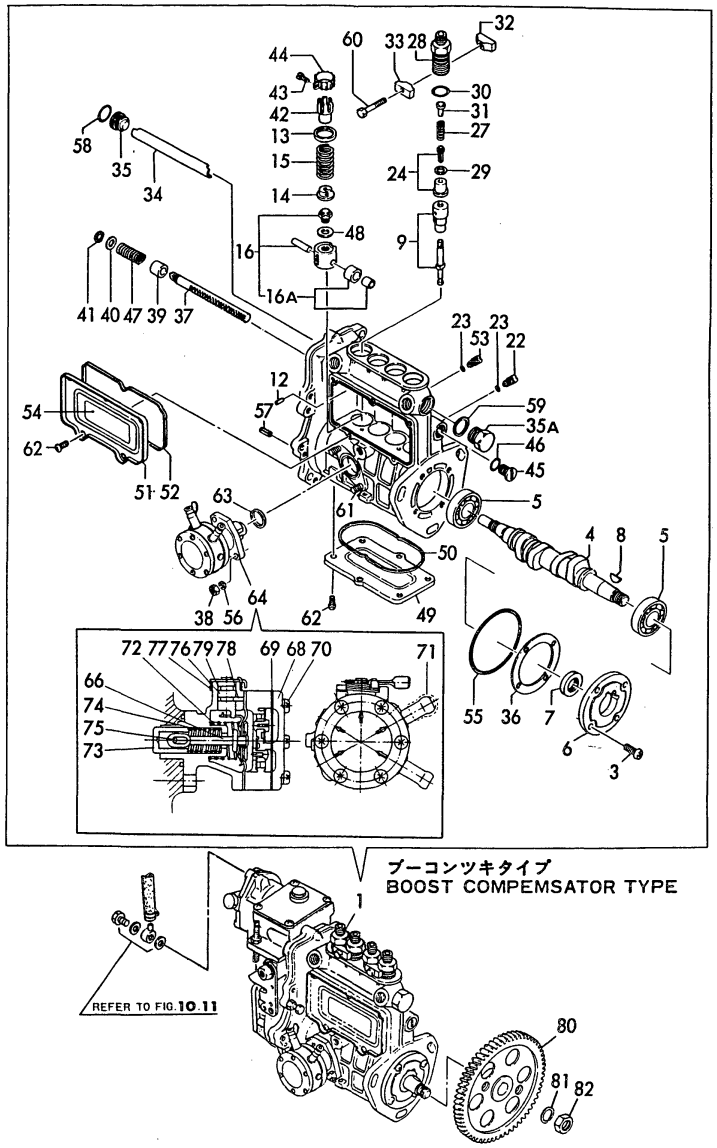

(A)=4JH2E
(B)=4JH2-TE
(C)=4JH2-HTE
(D)=4JH2-DTE
(E)=4JH2-UTE(B)
(F)=

No.	Lev.	Parts No.	Description	Q'ty (A)	(B)	(C)	(D)	(E)	(F)	I	R
1A	1	729571-51300	PUMP ASSY, INJECTION		1						1
1B	1	729572-51300	PUMP ASSY, INJECTION			1					1
1C	1	729573-51300	PUMP ASSY, INJECTION				1				1
3	2	26022-060162	SCREW, M6X16		4	4	4				
4	2	129506-51040	CAMSHAFT		1	1	1				
5	2	122710-51050	BEARING, HR30203J		2	2	2				
6	2	129470-51060	RETAINER, BEARING		1	1	1				
7	2	129470-51080	SEAL, AF0741F0		1	1	1				
8	2	122710-51090	KEY		1	1	1				
9	2	129470-51101	PLUNGER ASSY		4	4	4				
12	2	129155-51140	PIN		4	4	4				
13	2	174307-51170	RETAINER, SPRING A		4	4	4				
14	2	129155-51180	RETAINER, SPRING		4	4	4				
15	2	124950-51190	SPRING, PLUNGER		4	4	4				
16	2	129155-51200	TAPPET ASSY		4	4	4				
16A	3	711100-51540	ROLLER ASSY		4	4	4				
22	2	129155-51270	STOPPER, TAPPET		4	4	4				
23	2	129155-51280	O-RING, S6		5	5	5				
24	2	129573-51300	VALVE ASSY, DELIVERY		4	4	4				
27	2	129573-51330	SPRING, DELIVERY		4	4	4				
28	2	129573-51340	RETAINER		4	4	4				
29	2	124550-51350	GASKET, DELIVERY		4	4	4				
30	2	124550-51370	O-RING		4	4	4				
31	2	129573-51370	STOPPER, VALVE		4	4	4				
32	2	129155-51380	STOPPER		2	2	2				
33	2	129155-51390	STOPPER		2	2	2				
34	2	129555-51400	DEFLECTOR		1	1	1				
35	2	129155-51410	BOLT		1	1	1				
35A	2	129155-51420	PLUG, M16		1	1	1				
36	2	129155-51450	SHIM SET, ADJUSTING		1	1	1				
37	2	129555-51500	RACK, CONTROL		1	1	1				
38	2	26716-060002	NUT, M6		2	2	2				
39	2	129155-51521	BUSH, RACK		1	1	1				
40	2	129155-51530	SPACER		1	1	1				
41	2	129155-51540	CIRCLIP		1	1	1				
42	2	129155-51550	PINION, CONTROL		4	4	4				
43	2	122117-51560	SCREW		4	4	4				
44	2	174307-51560	PINION		4	4	4				
45	2	129155-51570	PLUG, M12		1	1	1				
46	2	129155-51580	O-RING		1	1	1				
47	2	129155-51591	SPRING, RACK		1	1	1				
48	2	129155-51600	SHIM SET, ADJUSTING		4	4	4				
49	2	129555-51700	COVER		1	1	1				
50	2	129555-51710	GASKET		1	1	1				
51	2	129555-51750	COVER		1	1	1				
52	2	129555-51760	GASKET		1	1	1				
53	2	129155-51790	STOOPER, RACK		1	1	1				
54	2	129156-51910	LABEL, CAUTION		1	1	1				
55	2	121850-51960	O-RING		1	1	1				
56	2	22217-060000	WASHER, SPRING 6		2	2	2				
57	2	22351-050010	PIN, SPRING 5.0X10		2	2	2				

N:Old $\overset{\text{Yes}}{\underset{\text{No}}{\leftrightarrow}}$ New, Q:Old $\overset{\text{No}}{\underset{\text{Yes}}{\leftrightarrow}}$ New, R:Old $\overset{\text{Yes}}{\underset{\text{Yes}}{\leftrightarrow}}$ New, S:Old $\overset{\text{No}}{\underset{\text{No}}{\leftrightarrow}}$ New, W:Add, Z:Discontinued, F:Interchangeable by set, K:Q'ty Change

Remarks
(1)GOVERNOR ASSY (FIG37) IS NCORORATED IN THESE FUEL INJECTION PUMP ASSY (REF.NO.1A,1B,1C)

++ CONTINUE ++

Copyright (C) YANMAR CO., LTD. All RightsReserved.

Fig.29. FUEL INJECTION PUMP(4JH2-TE,HTE,DTE)

Fig. 29 FOフンシャポンプ(4JH2-TE, HTE, DTE)
FUEL INJECTION PUMP

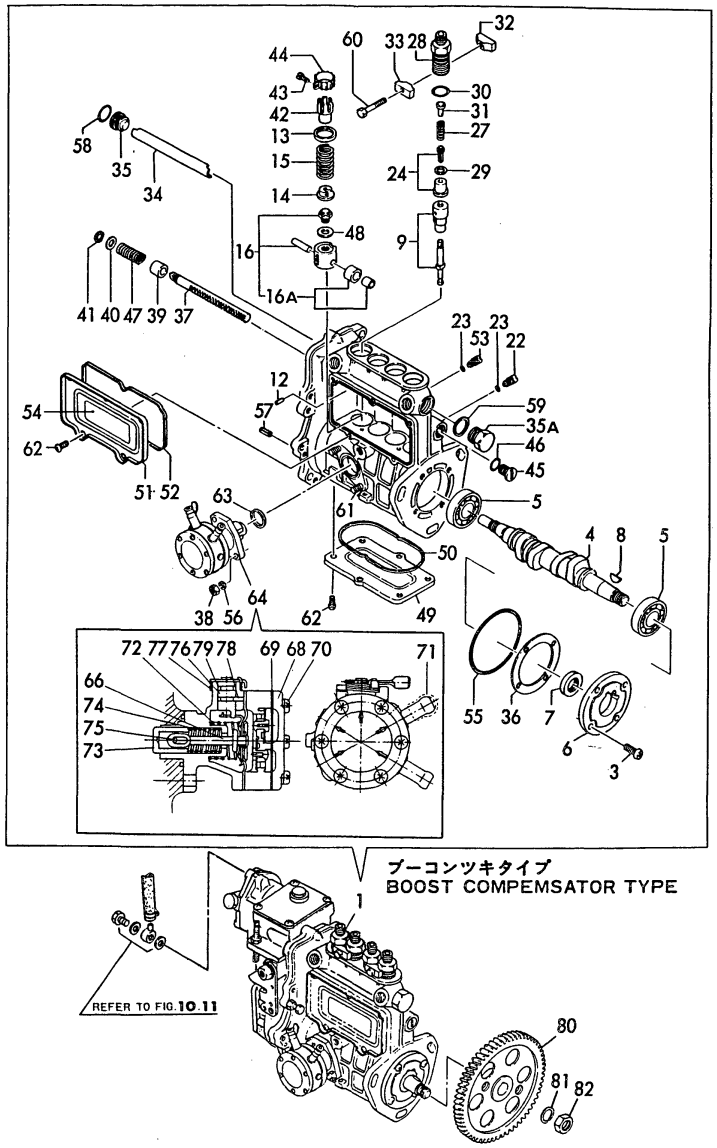

(A)=4JH2E
(B)=4JH2-TE
(C)=4JH2-HTE
(D)=4JH2-DTE
(E)=4JH2-UTE(B)
(F)=

No.	Lev.	Parts No.	Description	Q'ty (A)	(B)	(C)	(D)	(E)	(F)	I	R
58	2	24341-000160	O-RING, 1AS16.0		1	1	1				
59	2	43400-500490	SEAL WASHER 16S		1	1	1				
60	2	26116-050302	BOLT, M5X 30 PLATED		2	2	2				
61	2	129155-51020	STUD		2	2	2				
62	2	26022-050102	SCREW, M5X10		11	11	11				
63	2	129155-52050	GASKET		1	1	1				
64	2	129158-52100	PUMP ASSY, FUEL FEED		1	1	1				
66	3	129158-52020	DIAPHRAGM		1	1	1				
68	3	129158-52060	COVER		1	1	1				
69	3	129158-52070	GASKET		1	1	1				
70	3	129158-52080	SCREW		6	6	6				
71	3	129158-52090	CAP		2	2	2				
72	3	129158-52160	SPRING		1	1	1				
73	3	129158-52250	TAPPET		1	1	1				
74	3	129158-52260	SPRING		1	1	1				
75	3	129158-52270	PIN		1	1	1				
76	3	129158-52350	LEVER		1	1	1				
77	3	129158-52360	SPRING, RETURN		1	1	1				
78	3	129158-52370	PIN		1	1	1				
79	3	129158-52380	O-RING		1	1	1				
80	1	129150-25900	GEAR, PUMP				1				
80-1	1	129573-25900	GEAR, PUMP		1	1	1			N	
			(D=E31796)								
80-2	1	129573-25900	GEAR, PUMP				1			Z	
			(D=E35370)								
81	1	22217-120000	WASHER, SPRING 12		1	1	1				
81-1	1	22217-120000	WASHER, SPRING 12				1			Z	
			(D=E35370)								
82	1	26716-120002	NUT, M12		1	1	1				
82-1	1	26716-120002	NUT, M12				1			Z	
			(D=E35370)								

Remarks
(1)GOVERNOR ASSY (FIG37) IS NCORORATED IN THESE FUEL INJECTION PUMP ASSY (REF.NO.1A,1B,1C)

N:Old $\frac{\text{Yes}}{\text{No}}$ New, Q:Old $\frac{\text{No}}{\text{Yes}}$ New, R:Old $\frac{\text{Yes}}{\text{Yes}}$ New, S:Old $\frac{\text{No}}{\text{No}}$ New, W:Add, Z:Discontinued, F:Interchangeable by set, K:Q'ty Change

Copyright (C) YANMAR CO., LTD. All RightsReserved.

Fig.30. FUEL INJECTION PUMP(4JH2E)

Fig. 30 FOフンシャポンプ(4JH2-E)
FUEL INJECTION PUMP

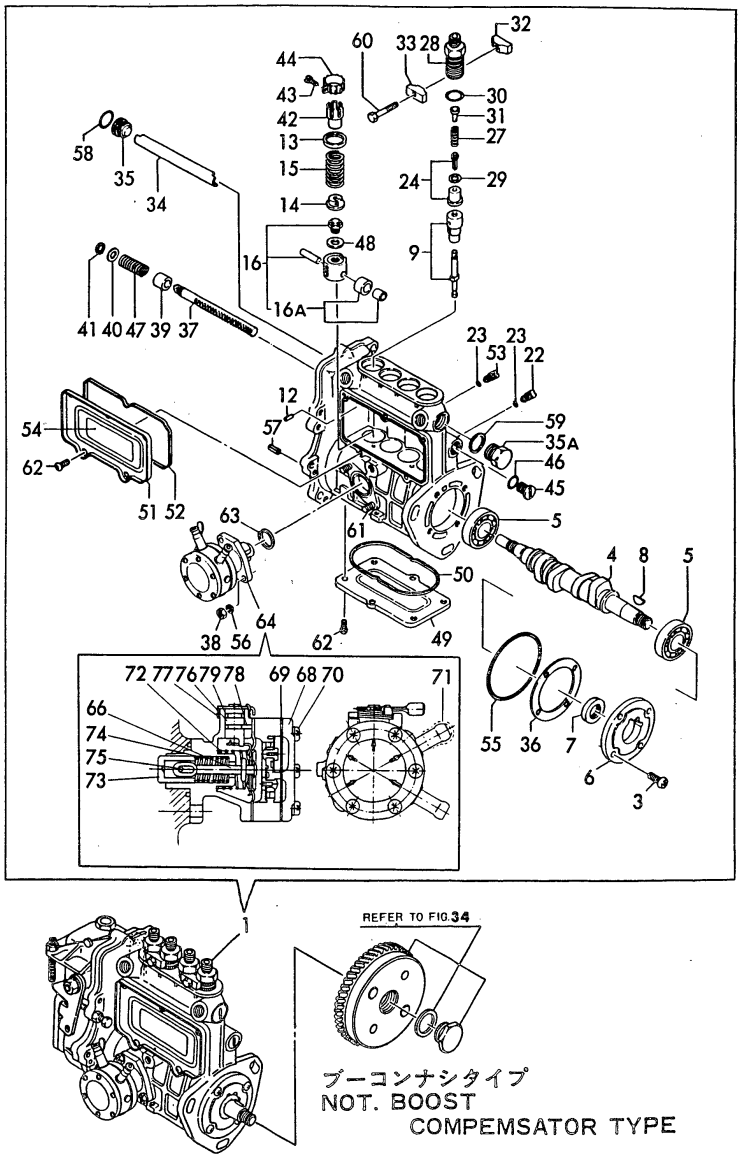

(A)=4JH2E
(B)=4JH2-TE
(C)=4JH2-HTE
(D)=4JH2-DTE
(E)=4JH2-UTE(B)
(F)=

No.	Lev.	Parts No.	Description	Q'ty (A)	(B)	(C)	(D)	(E)	(F)	I	R
1	1	729570-51350	PUMP ASSY, INJECTION	1							1
3	2	26022-060162	SCREW, M6X16	4							
4	2	129506-51040	CAMSHAFT	1							
5	2	122710-51050	BEARING, HR30203J	2							
6	2	129470-51060	RETAINER, BEARING	1							
7	2	129470-51080	SEAL, AF0741F0	1							
8	2	122710-51090	KEY	1							
9	2	129470-51101	PLUNGER ASSY	4							
12	2	129155-51140	PIN	4							
13	2	174307-51170	RETAINER, SPRING A	4							
14	2	129155-51180	RETAINER, SPRING	4							
15	2	124950-51190	SPRING, PLUNGER	4							
16	2	129155-51200	TAPPET ASSY	4							
16A	3	711100-51540	ROLLER ASSY	4							
22	2	129155-51270	STOPPER, TAPPET	4							
23	2	129155-51280	O-RING, S6	5							
24	2	129573-51300	VALVE ASSY, DELIVERY	4							
27	2	129573-51330	SPRING, DELIVERY	4							
28	2	129573-51340	RETAINER	4							
29	2	124550-51350	GASKET, DELIVERY	4							
30	2	124550-51370	O-RING	4							
31	2	129573-51370	STOPPER, VALVE	4							
32	2	129155-51380	STOPPER	2							
33	2	129155-51390	STOPPER	2							
34	2	129555-51400	DEFLECTOR	1							
35	2	129155-51410	BOLT	1							
35A	2	129155-51420	PLUG, M16	1							
36	2	129155-51450	SHIM SET, ADJUSTING	1							
37	2	129555-51500	RACK, CONTROL	1							
38	2	26716-060002	NUT, M6	2							
39	2	129155-51521	BUSH, RACK	1							
40	2	129155-51530	SPACER	1							
41	2	129155-51540	CIRCLIP	1							
42	2	129155-51550	PINION, CONTROL	4							
43	2	122117-51560	SCREW	4							
44	2	174307-51560	PINION	4							
45	2	129155-51570	PLUG, M12	1							
46	2	129155-51580	O-RING	1							
47	2	129155-51591	SPRING, RACK	1							
48	2	129155-51600	SHIM SET, ADJUSTING	4							
49	2	129555-51700	COVER	1							
50	2	129555-51710	GASKET	1							
51	2	129555-51750	COVER	1							
52	2	129555-51760	GASKET	1							
53	2	129155-51790	STOOPER, RACK	1							
54	2	129156-51910	LABEL, CAUTION	1							
55	2	121850-51960	O-RING	1							
56	2	22217-060000	WASHER, SPRING 6	2							
57	2	22351-050010	PIN, SPRING 5.0X10	2							
58	2	24341-000160	O-RING, 1AS16.0	1							
59	2	43400-500490	SEAL WASHER 16S	1							

Remarks
1)GOVERNOR ASSY (FIG38) IS.
INCORPORATED IN THIS FUEL INJECTION
PUMP ASSY(REF NO1)

N:Old $\overset{\text{Yes}}{\underset{\text{No}}{\leftrightarrow}}$ New, Q:Old $\overset{\text{No}}{\underset{\text{Yes}}{\leftrightarrow}}$ New, R:Old $\overset{\text{Yes}}{\underset{\text{Yes}}{\leftrightarrow}}$ New, S:Old $\overset{\text{No}}{\underset{\text{No}}{\leftrightarrow}}$ New, W:Add, Z:Discontinued, F:Interchangeable by set, K:Q'ty Change

++ CONTINUE ++

Copyright (C) YANMAR CO., LTD. All RightsReserved.

Fig.30. FUEL INJECTION PUMP(4JH2E)

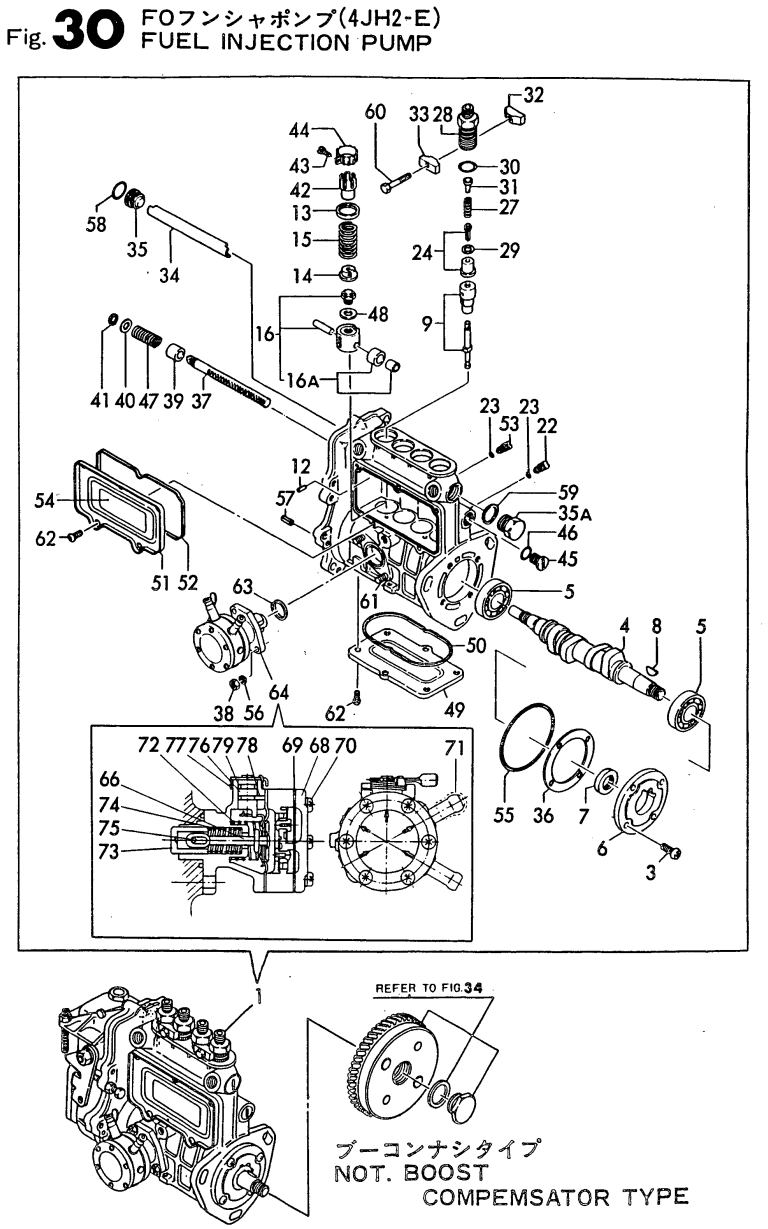

Remarks
1)GOVERNOR ASSY (FIG38) IS.
INCORPORATED IN THIS FUEL INJECTION
PUMP ASSY(REF NO1)

(A)=4JH2E (D)=4JH2-DTE
(B)=4JH2-TE (E)=4JH2-UTE(B)
(C)=4JH2-HTE (F)=

No.	Lev.	Parts No.	Description	Q'ty (A)	(B)	(C)	(D)	(E)	(F)	I	R
60	2	26116-050302	BOLT, M5X 30 PLATED	2							
61	2	129155-51020	STUD	2							
62	2	26022-050102	SCREW, M5X10	11							
63	2	129155-52050	GASKET	1							
64	2	129158-52100	PUMP ASSY, FUEL FEED	1							
66	3	129158-52020	DIAPHRAGM	1							
68	3	129158-52060	COVER	1							
69	3	129158-52070	GASKET	1							
70	3	129158-52080	SCREW	6							
71	3	129158-52090	CAP	2							
72	3	129158-52160	SPRING	1							
73	3	129158-52250	TAPPET	1							
74	3	129158-52260	SPRING	1							
75	3	129158-52270	PIN	1							
76	3	129158-52350	LEVER	1							
77	3	129158-52360	SPRING, RETURN	1							
78	3	129158-52370	PIN	1							
79	3	129158-52380	O-RING	1							

N:Old ←Yes/No→ New, Q:Old ←No/Yes→ New, R:Old ←Yes/Yes→ New, S:Old ←No/No→ New, W:Add, Z:Discontinued, F:Interchangeable by set, K:Q'ty Change

Copyright (C) YANMAR CO., LTD. All RightsReserved.

Fig.31. FUEL INJECTION PUMP(4JH2-UTE)

Fig. 31 FOフンシャポンプ(4JH2-UTE) FUEL INJECTION PUMP

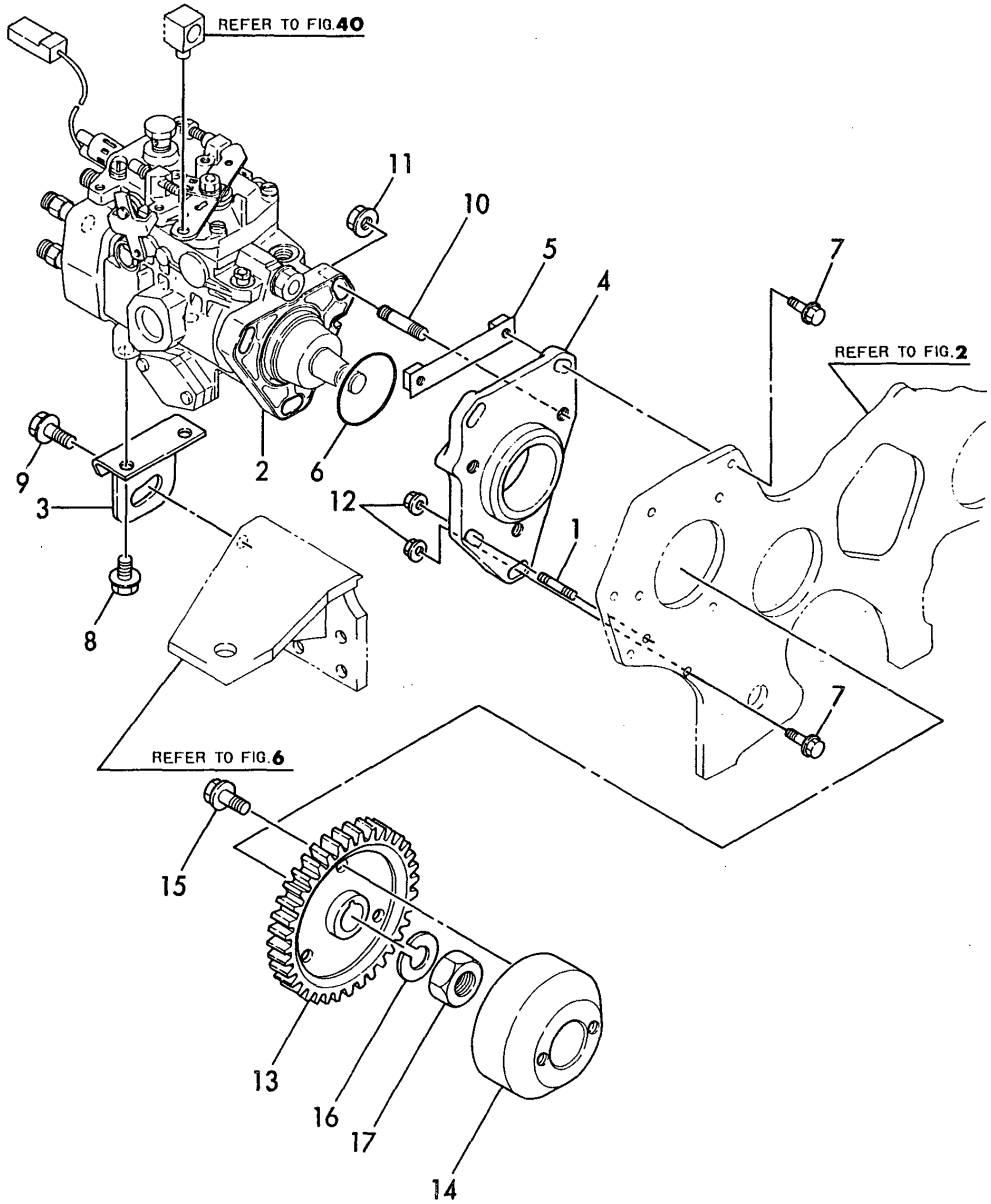

(A)=4JH2E (D)=4JH2-DTE
(B)=4JH2-TE (E)=4JH2-UTE(B)
(C)=4JH2-HTE (F)=

No.	Lev.	Parts No.	Description	Q'ty (A)	(B)	(C)	(D)	(E)	(F)	I	R
1	1	121450-01560	STUD, M8X22					1			
2	1	129574-51070	PUMP ASSY, INJECTION					1			
2-1	1	129574-51900	PUMP ASSY, INJECTION					1		N	
			(E=*1991.05)								
2-2	1	129574-51901	PUMP ASSY, INJECTION					1		S	
			(E=E41481)								
3	1	129574-51250	RETAINER, PUMP					1			
4	1	129574-54030	BRACKET, PUMP					1			
4-1	1	129574-54031	BRACKET, PUMP					1		N	
			(E=E41490)								
5	1	129574-54090	NUT					1			
6	1	24341-000500	O-RING, 1AS50.0					1			
7	1	26106-080652	BOLT, M8X 65 PLATED					3			
8	1	26106-100162	BOLT, M10X 16 PLATED					2			
9	1	26106-100252	BOLT, M10X 25 PLATED					1			
10	1	26216-080282	STUD, M8X 28					3			
11	1	26366-080002	NUT, M8					3			
12	1	26366-080002	NUT, M8					2			
13	1	129574-25900	GEAR, PUMP					1			
14	1	129574-25920	WEIGHT, TIMER					1			
15	1	26106-080182	BOLT, M8X 18 PLATED					3			
16	1	22217-140000	WASHER, SPRING 14					1			
17	1	26776-140002	NUT, LOCK M14					1			

N:Old $\xleftrightarrow[\text{No}]{\text{Yes}}$ New, Q:Old $\xleftrightarrow[\text{Yes}]{\text{No}}$ New, R:Old $\xleftrightarrow[\text{Yes}]{\text{Yes}}$ New, S:Old $\xleftrightarrow[\text{No}]{\text{No}}$ New, W:Add, Z:Discontinued, F:Interchangeable by set, K:Q'ty Change

Copyright (C) YANMAR CO., LTD. All RightsReserved.

Fig.32. FUEL INJECTION PIPE(4JH2-E,TE,HTE,DTE)

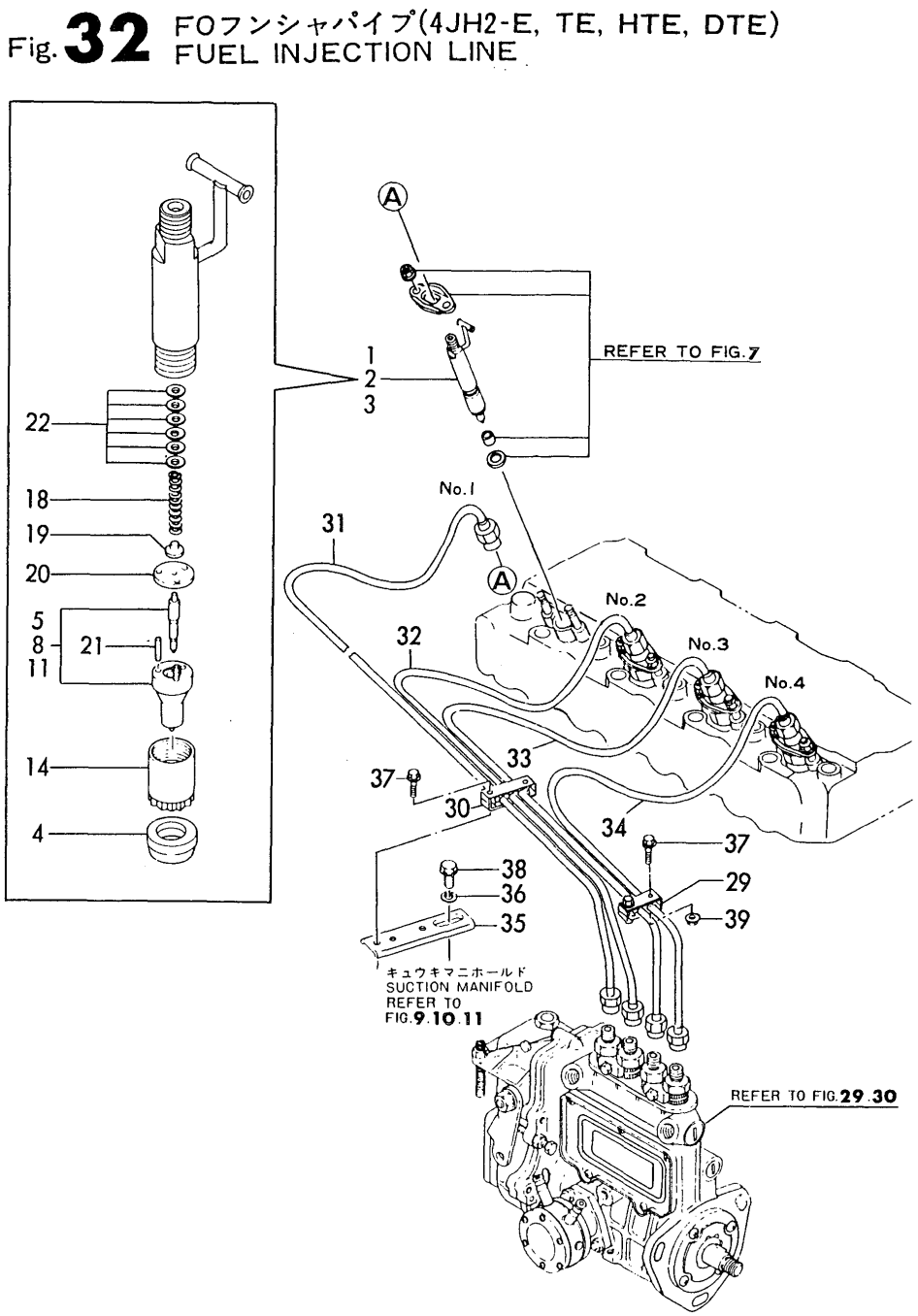

(A)=4JH2E (D)=4JH2-DTE
(B)=4JH2-TE (E)=4JH2-UTE(B)
(C)=4JH2-HTE (F)=

No.	Lev.	Parts No.	Description	Q'ty (A)	(B)	(C)	(D)	(E)	(F)	I	R
1	1	729570-53100	VALVE ASSY,INJECTION	4							
1-1	1	729570-53200	VALVE ASSY,INJECTION	4						S	
	(A=E09282)										
2	1	729573-53100	VALVE ASSY,INJECTION				4				
2-1	1	729573-53050	VALVE ASSY,INJECTION				4			N	
			(D=E31928)								
3	1	729595-53100	VALVE ASSY,INJECTION		4	4					
4	2	129470-11920	GASKET	4	4	4	4				
5	2	129570-53000	VALVE ASSY,INJECTION	4							
5-1	2	129506-53000	VALVE ASSY,INJECTION	4						S	
	(A=E09282)										
8	2	129573-53000	VALVE ASSY,INJECTION				4				
8-1	2	129573-53500	VALVE ASSY,INJECTION				4			N	
			(D=E31928)								
11	2	129595-53000	VALVE ASSY,INJECTION		4	4					
14	2	114250-53080	NUT, NOZZLE D16.95	4	4	4	4				
18	2	114250-53120	SPRING, NOZZLE	4	4	4	4				
19	2	114250-53130	SEAT, SPRING	4	4	4	4				
20	2	114250-53140	PLATE	4	4	4	4				
21	2	114250-53210	PIN	8	8	8	8				
22	2	114250-53400	SHIM SET	4	4	4	4				
29	1	122780-59100	RETAINER	2	2	2	2				
30	1	123372-59100	RETAINER, PIPE	2	2	2	2				
31	1	129499-59811	PIPE ASSY, INJECTION			1	1				
31A	1	129470-59811	PIPE ASSY, INJECTION	1	1						
32	1	129499-59821	PIPE ASSY, INJECTION			1	1				
32A	1	129470-59821	PIPE ASSY, INJECTION	1	1						
33	1	129499-59831	PIPE ASSY, INJECTION			1	1				
33A	1	129470-59831	PIPE ASSY, INJECTION	1	1						
34	1	129499-59841	PIPE ASSY, INJECTION			1	1				
34A	1	129470-59841	PIPE ASSY, INJECTION	1	1						
35	1	121870-59930	STAY	1	1	1	1				
36	1	22217-080000	WASHER, SPRING 8	1	1	1	1				
37	1	26106-060202	BOLT, M6X 20 PLATED	4	4	4	4				
38	1	26106-080202	BOLT, M8X 20 PLATED	1	1	1	1				
39	1	26366-060002	NUT, M6	2	2	2	2				

N:Old ←Yes/No→ New, Q:Old ←No/Yes→ New, R:Old ←Yes/Yes→ New, S:Old ←No/No→ New, W:Add, Z:Discontinued, F:Interchangeable by set, K:Q'ty Change

Copyright (C) YANMAR CO., LTD. All RightsReserved.

Fig.33. FUEL INJECTION PIPE(4JH2-UTE)

Fig. 33 FOフンシャパイプ(4JH2-UTE)
FUEL INJECTION LINE

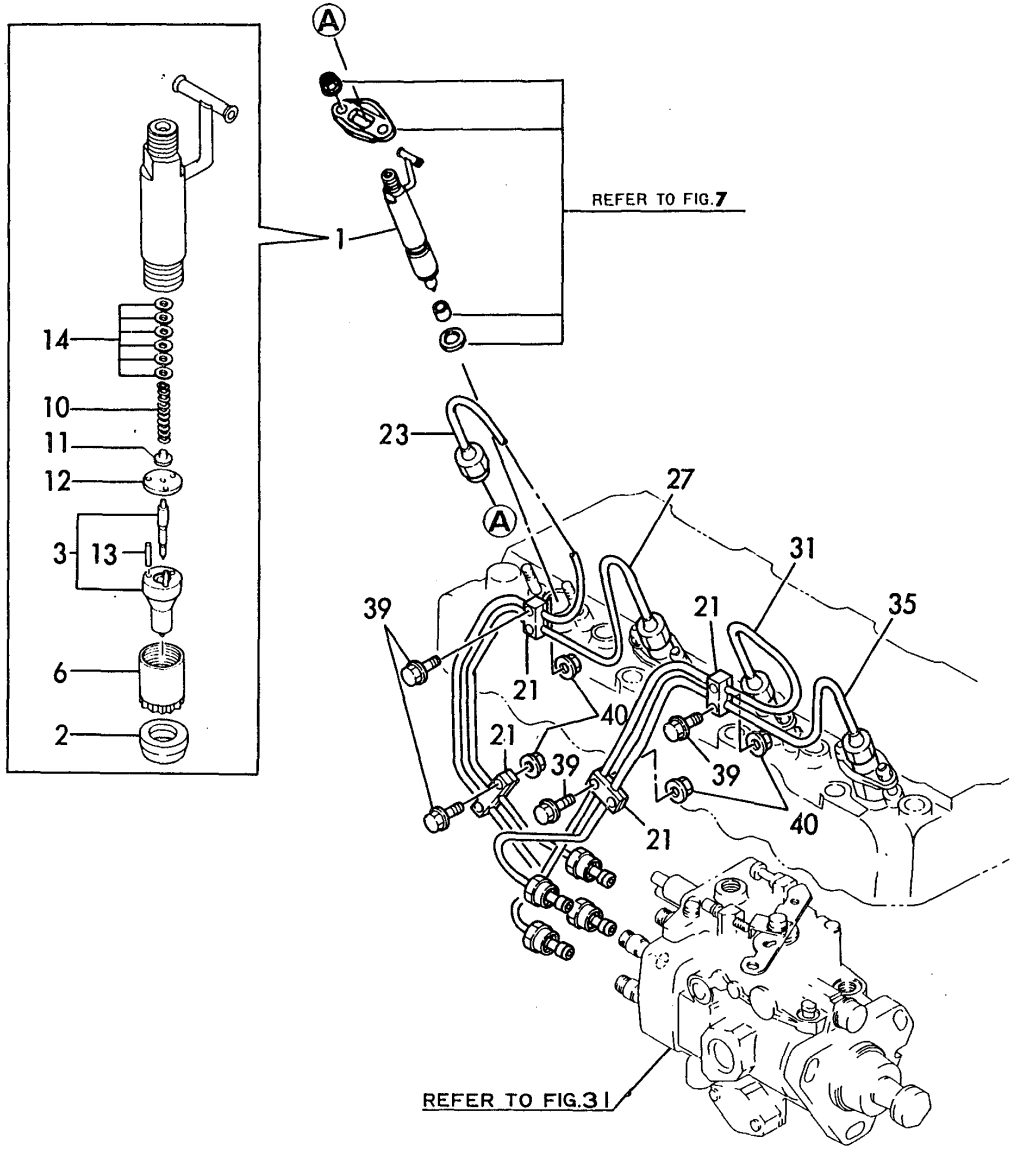

(A)=4JH2E (D)=4JH2-DTE
(B)=4JH2-TE (E)=4JH2-UTE(B)
(C)=4JH2-HTE (F)=

No.	Lev.	Parts No.	Description	Q'ty (A)	(B)	(C)	(D)	(E)	(F)	I	R
1	1	729595-53100	VALVE ASSY,INJECTION					4			
1-1	1	729573-53050	VALVE ASSY,INJECTION					4		S	
				(E=E41526)							
2	2	129470-11920	GASKET					4			
3	2	129595-53000	VALVE ASSY,INJECTION					4			
3-1	2	129573-53500	VALVE ASSY,INJECTION					4		S	
				(E=E41526)							
6	2	114250-53080	NUT, NOZZLE D16.95					4			
10	2	114250-53120	SPRING, NOZZLE					4			
11	2	114250-53130	SEAT, SPRING					4			
12	2	114250-53140	PLATE					4			
13	2	114250-53210	PIN					8			
14	2	114250-53400	SHIM SET					4			
21	1	122780-59100	RETAINER					8			
23	2	129574-59810	PIPE ASSY, INJECTION					1			
27	2	129574-59820	PIPE ASSY, INJECTION					1			
31	2	129574-59830	PIPE ASSY, INJECTION					1			
35	2	129574-59840	PIPE ASSY, INJECTION					1			
39	1	26106-060202	BOLT, M6X 20 PLATED					8			
40	1	26366-060002	NUT, M6					8			

N:Old $\xleftrightarrow[\text{No}]{\text{Yes}}$ New, Q:Old $\xleftrightarrow[\text{Yes}]{\text{No}}$ New, R:Old $\xleftrightarrow[\text{Yes}]{\text{Yes}}$ New, S:Old $\xleftrightarrow[\text{No}]{\text{No}}$ New, W:Add, Z:Discontinued, F:Interchangeable by set, K:Q'ty Change

Copyright (C) YANMAR CO., LTD. All RightsReserved.

Fig.34. TIMER(4JH2-E,DTE)

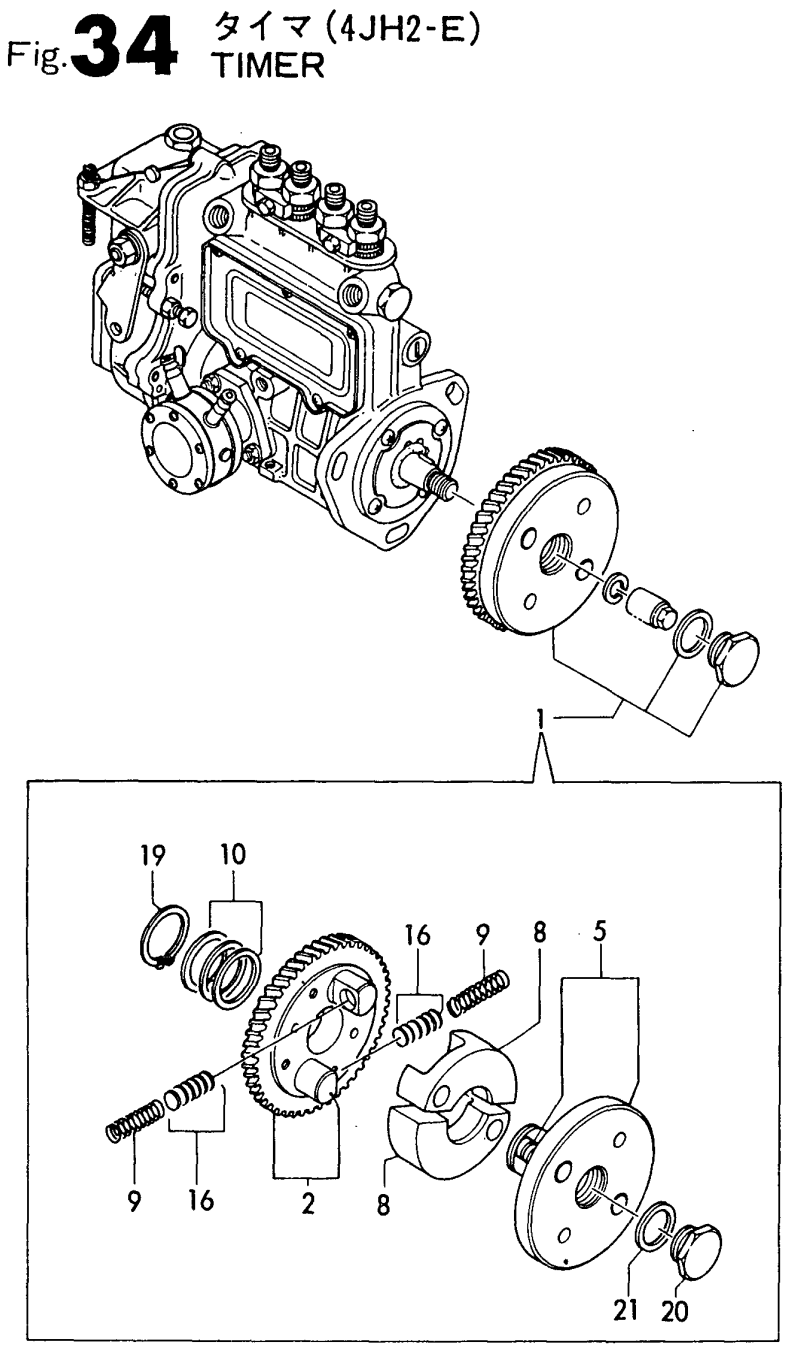

(A)=4JH2E
(B)=4JH2-TE
(C)=4JH2-HTE
(D)=4JH2-DTE
(E)=4JH2-UTE(B)
(F)=

No.	Lev.	Parts No.	Description	Q'ty (A)	(B)	(C)	(D)	(E)	(F)	I	R
1	1	729499-54100	TIMER ASSY (D=E35370)	1			1			W	
2	2	129470-54510	GEAR ASSY, TIMER	1			1				
5	2	129499-54550	HUB ASSY, TIMER	1			1				
8	2	129470-54650	WEIGHT, TIMER	2			2				
9	2	124310-54800	SPRING, TIMER	2			2				
10	2	119620-54900	SHIM SET	1			1				
16	2	121850-54900	SHIM SET, SPRING	2			2				
19	2	22242-000320	RING, 32	1			1				
20	2	124410-54940	PLUG	1			1				
21	2	23414-240031	GASKET, 24X1.0	1			1				

N:Old $\overset{\text{Yes}}{\underset{\text{No}}{\leftrightarrows}}$ New, Q:Old $\overset{\text{No}}{\underset{\text{Yes}}{\leftrightarrows}}$ New, R:Old $\overset{\text{Yes}}{\underset{\text{Yes}}{\leftrightarrows}}$ New, S:Old $\overset{\text{No}}{\underset{\text{No}}{\leftrightarrows}}$ New, W:Add, Z:Discontinued, F:Interchangeable by set, K:Q'ty Change

Copyright (C) YANMAR CO., LTD. All RightsReserved.

Fig.35. FUEL PIPE(4JH2-E,TE,HTE,DTE)

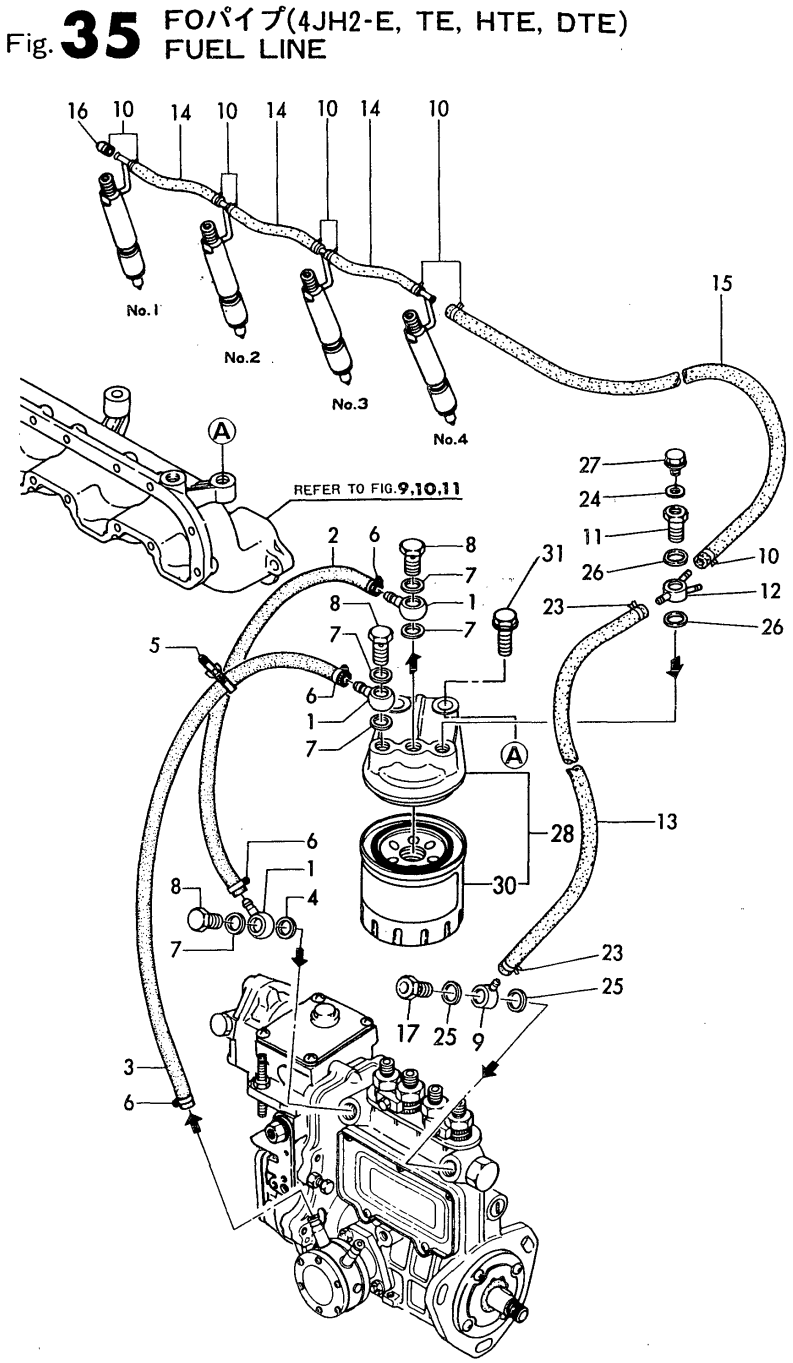

(A)=4JH2E (D)=4JH2-DTE
(B)=4JH2-TE (E)=4JH2-UTE(B)
(C)=4JH2-HTE (F)=

No.	Lev.	Parts No.	Description	Q'ty (A)	(B)	(C)	(D)	(E)	(F)	I	R
1	1	101304-59020	JOINT, PIPE 12	3	3	3	3				
2	1	129470-59120	PIPE, FUEL	1	1	1	1				
3	1	129470-59120	PIPE, FUEL	1	1	1	1				
4	1	104200-59170	GASKET, 12	1	1	1	1				
5	1	121750-59890	BAND, 140	1	1	1	1				
6	1	23080-013000	CLAMP, 13	4	4	4	4				
7	1	23414-120000	GASKET, 12X1.0	5	5	5	5				
8	1	23857-060000	BOLT, JOINT 6	3	3	3	3				
9	1	101304-59020	JOINT, PIPE 12	1	1	1	1				
10	1	124066-59100	CLIP, HOSE 8	9	9	9	9				
11	1	129495-59300	BOLT, PIPE JOINT	1	1	1	1				
12	1	129470-59530	JOINT, PIPE	1	1	1	1				
13	1	129470-59540	PIPE, FUEL	1	1	1	1				
14	1	119000-59550	PIPE, FUEL RETURN	3	3	3	3				
15	1	129470-59560	PIPE, FUEL RETURN	1	1	1	1				
16	1	129150-59580	CAP	1	1	1	1				
17	1	129100-59951	VALVE ASSY, CHECK	1	1	1	1				
23	1	23080-013000	CLAMP, 13	2	2	2	2				
24	1	23414-080000	GASKET, 8X1.0	1	1	1	1				
25	1	23414-120000	GASKET, 12X1.0	2	2	2	2				
26	1	23414-140000	GASKET, 14X1.0	2	2	2	2				
27	1	26106-080102	BOLT, M8X 10 PLATED	1	1	1	1				
28	1	129470-55601	FILTER ASSY, FUEL	1	1	1	1				
30	2	129470-55700	STRAINER	1	1	1	1				
30-1	2	129470-55701	STRAINER ASSY, FUEL	1	1	1	1			N	
	(A=*1991.01)	(B=*1991.01)	(C=*1991.01)	(D=*1991.01)							
31	1	26106-100302	BOLT, M10X 30 PLATED	2	2	2	2				

N:Old ←Yes/No→ New, Q:Old ←No/Yes→ New, R:Old ←Yes/Yes→ New, S:Old ←No/No→ New, W:Add, Z:Discontinued, F:Interchangeable by set, K:Q'ty Change

Copyright (C) YANMAR CO., LTD. All RightsReserved.

Fig.36. FUEL PIPE(4JH2-UTE)

(A)=4JH2E
(B)=4JH2-TE
(C)=4JH2-HTE
(D)=4JH2-DTE
(E)=4JH2-UTE(B)
(F)=

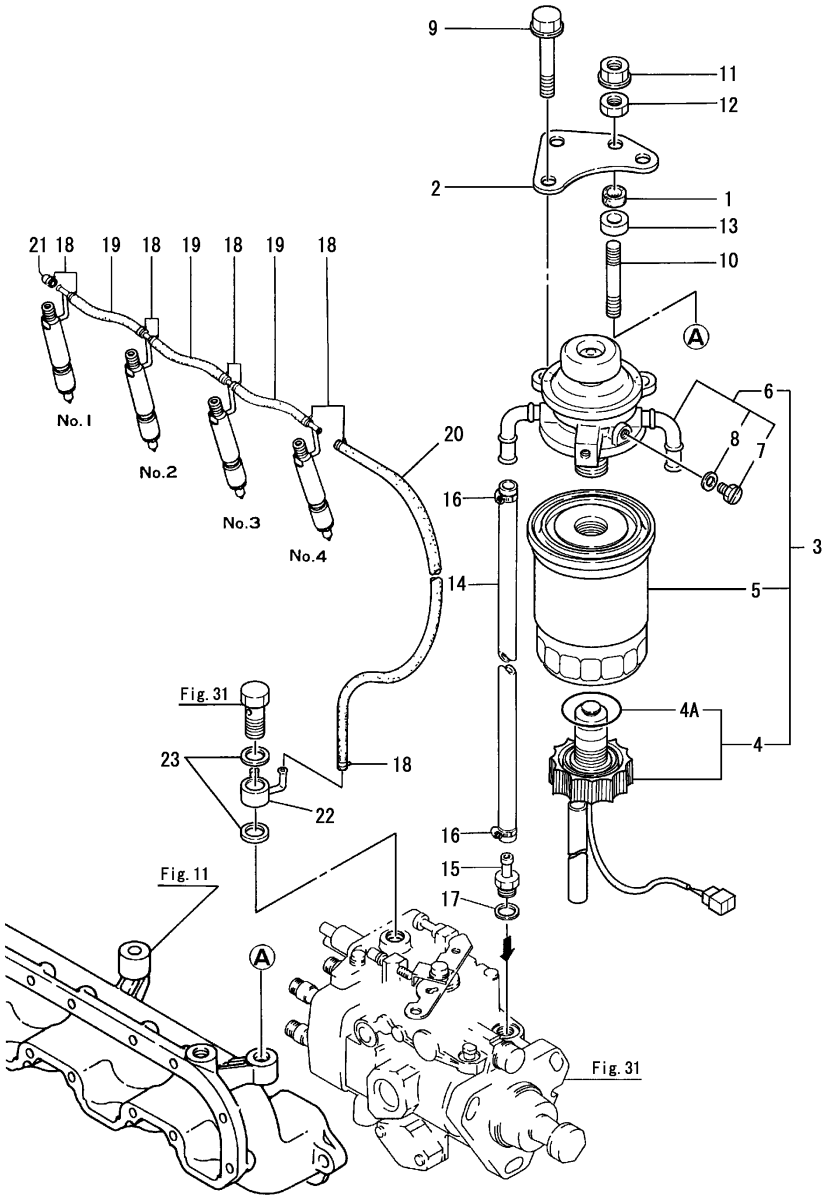

No.	Lev.	Parts No.	Description	Q'ty (A)	(B)	(C)	(D)	(E)	(F)	I	R
1	1	105300-44451	RUBBER, CUSHION					2			
2	1	129574-55651	BRACKET, FILTER					1			
3	1	129574-55800	STRAINER ASSY, FUEL					1			
4	2	129574-55730	SENSOR					1			
4A	3	129574-55780	O-RING					1			
5	2	129574-55710	FILTER, FUEL					1			
6	2	129574-55700	BODY ASSY					1			
7	3	121857-55750	PLUG					1			
8	3	121857-55760	WASHER					1			
9	1	26106-080552	BOLT, M8X 55 PLATED					2			
10	1	26216-100552	STUD, M10X 55					2			
11	1	26366-100002	NUT, M10					2			
12	1	26716-100002	NUT, M10					2			
13	1	45511-501250	SPACER					2			
14	1	129470-59540	PIPE, FUEL					1			
15	1	119171-59910	JOINT, PIPE					1			
16	1	23080-013000	CLAMP, 13					2			
17	1	23414-120000	GASKET, 12X1.0					1			
18	1	124066-59100	CLAMP, HOSE 8					9			
19	1	119000-59550	HOSE, FUEL RETURN					3			
20	1	129100-59560	PIPE, FUEL RETURN					1			
21	1	129150-59580	CAP					1			
22	1	129574-59990	JOINT, PIPE					1			
23	1	23414-120000	GASKET, 12X1.0					2			

N:Old ◄Yes/No► New, Q:Old ◄No/Yes► New, R:Old ◄Yes/Yes► New, S:Old ◄No/No► New, W:Add, Z:Discontinued, F:Interchangeable by set, K:Q'ty Change

Copyright (C) YANMAR CO., LTD. All RightsReserved.

Fig.37. GOVERNOR(4JH2-TE,HTE,DTE)

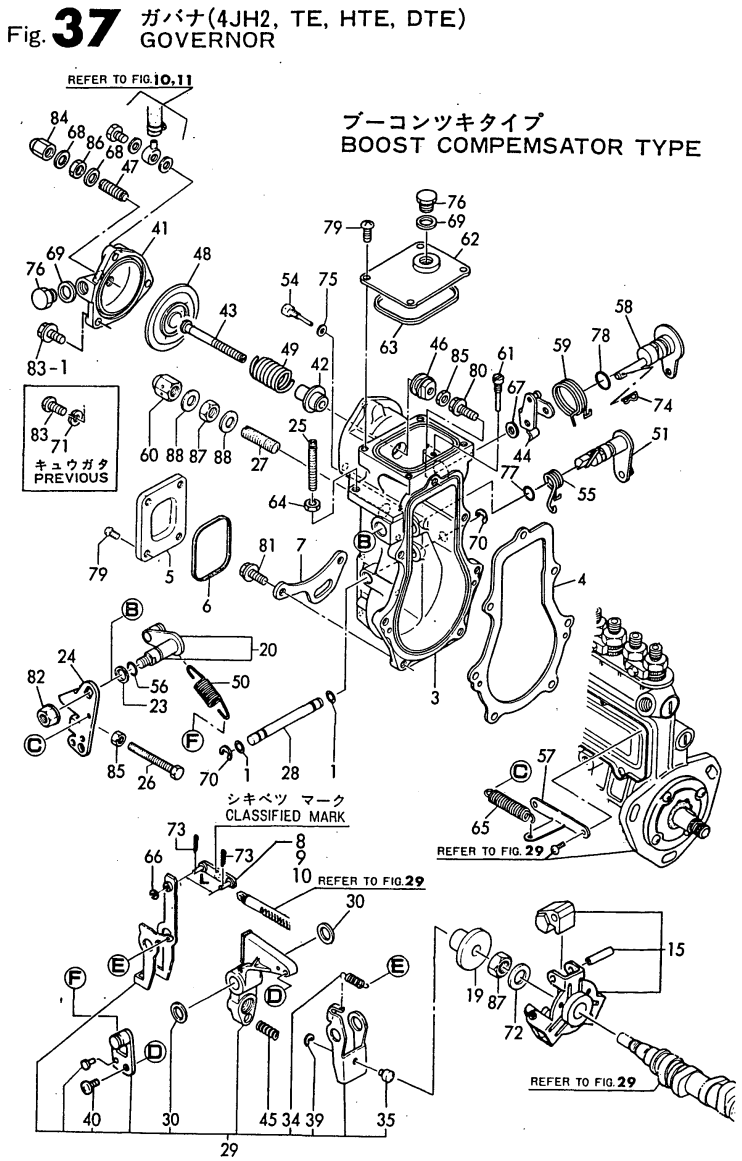

(A)=4JH2E
(B)=4JH2-TE
(C)=4JH2-HTE
(D)=4JH2-DTE
(E)=4JH2-UTE(B)
(F)=

No.	Lev.	Parts No.	Description	Q'ty (A)	(B)	(C)	(D)	(E)	(F)	I	R
1	1	129155-51280	O-RING, S6		2	2	2				
3	1	129595-61011	CASE, GOVERNOR				1				
3-1	1	129595-61012	HOUSING, GOVERNOR		1	1	1			F	2
			(D=E31796)								
4	1	129595-61050	GASKET		1	1	1				
5	1	129155-61060	COVER, GOVERNOR CASE		1	1	1				
6	1	129155-61070	GASKET		1	1	1				
7	1	129595-61080	SUPPORT		1	1	1				
8	1	129155-61120	LINK, L=30 MARK 0		1	1	1				1
9	1	129155-61130	LINK, L=31 MARK 1		1	1	1				1
10	1	129155-61140	LINK, L=30.5 MARK 05		1	1	1				1
15	1	129595-61200	WEIGHT ASSY,GOVERNOR		1	1	1				
19	1	129155-61341	SLEEVE		1	1	1				
20	1	129100-61400	SHAFT ASSY		1	1	1				
23	1	129155-61430	SPACER		1	1	1				
24	1	129499-61440	LEVER, CONTROL		1	1	1				
25	1	129155-61450	BOLT, LIMITER		1	1	1				
26	1	129155-61460	BOLT, IDLE		1	1	1				
27	1	129155-61470	BOLT, CONTROL		1	1	1				
28	1	129155-61490	SHAFT		1	1	1				
29	1	129595-61500	LEVER ASSY, GOVERNOR		1	1	1				
30	2	174307-51700	SHIM SET		2	2	2				
34	2	119843-61540	SPRING, SET		1	1	1				
35	2	129155-61540	SHIFTER		1	1	1				
39	2	22272-000040	RING, E- 4		1	1	1				
40	2	26022-060122	SCREW, M6X12		1	1	1				
41	1	129595-61600	CASE		1	1	1				
42	1	129595-61610	BUSH		1	1	1				
43	1	129595-61620	ROD, SLIDER		1	1	1				
44	1	129595-61631	LEVER, SETTING		1	1	1				
45	1	129499-61650	SPRING, FUEL CONTROL		1	1	1				
46	1	129595-61660	RING		1	1	1				
47	1	129595-61670	BOLT, ADJUSTER		1	1	1				
48	1	129595-61680	DIAPHRAGM		1	1	1				
49	1	129595-61691	SPRING, DIAPHRAGM		1	1	1				
50	1	129100-61730	SPRING, GOVERNOR		1	1	1				
50-1	1	129573-61700	SPRING, GOVERNOR				1			N	
			(D=E32327)								
51	1	129595-61801	LEVER, STOP				1				
51-1	1	129595-61802	SHAFT, STOP LEVER		1	1	1			S	
			(D=E31796)								
54	1	129155-61810	PIN		1	1	1				
55	1	129595-61820	SPRING, RETURN				1				
55-1	1	129595-61821	SPRING, RETURN		1	1	1			S	
			(D=E31796)								
56	1	129155-61830	O-RING, S10		1	1	1				
57	1	129499-61890	HOOK		1	1	1				
58	1	129595-61901	LEVER		1	1	1				
59	1	129595-61911	SPRING, SET		1	1	1				
60	1	129100-61930	NUT, CAP		1	1	1				
61	1	129595-61931	PIN		1	1	1				

N:Old $\xleftarrow[\text{No}]{\text{Yes}}$ New, Q:Old $\xleftarrow[\text{Yes}]{\text{No}}$ New, R:Old $\xleftarrow[\text{Yes}]{\text{Yes}}$ New, S:Old $\xleftarrow[\text{No}]{\text{No}}$ New, W:Add, Z:Discontinued, F:Interchangeable by set, K:Q'ty Change

Remarks
BOOST COMPEMSATOR TYPE.
1) SELECTIVE PART; CERTAIN THE CLAS
-SIFICATION MARK WHEN PLACE YOUR
ORDER. (REFER TO THE ILLUSTRATION)
2) INTERCHANGEABLE BY SIMULTANEOUS
REPLACEMENT WITH REF.51-1, & 77-1.

++ CONTINUE ++

Copyright (C) YANMAR CO., LTD. All RightsReserved.

Fig.37. GOVERNOR(4JH2-TE,HTE,DTE)

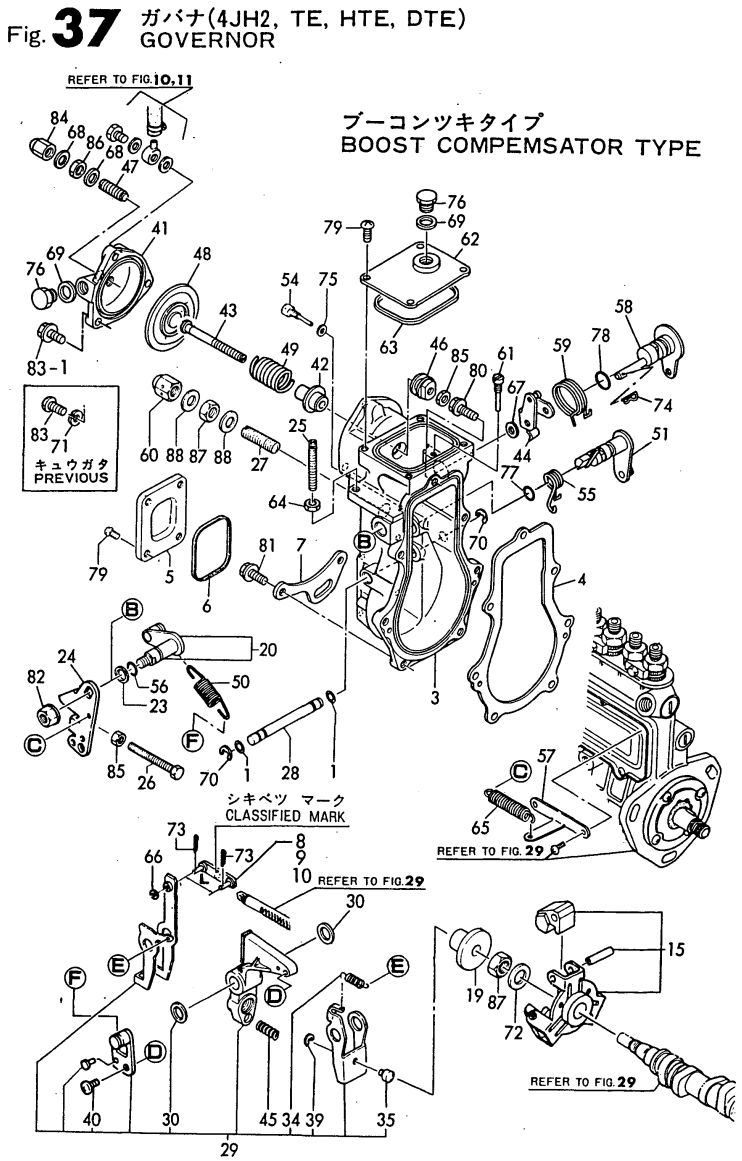

Remarks
BOOST COMPEMSATOR TYPE.
1) SELECTIVE PART; CERTAIN THE CLAS
-SIFICATION MARK WHEN PLACE YOUR
ORDER. (REFER TO THE ILLUSTRATION)
2) INTERCHANGEABLE BY SIMULTANEOUS
REPLACEMENT WITH REF.51-1, & 77-1.

(A)=4JH2E (D)=4JH2-DTE
(B)=4JH2-TE (E)=4JH2-UTE(B)
(C)=4JH2-HTE (F)=

No.	Lev.	Parts No.	Description	Q'ty (A)	(B)	(C)	(D)	(E)	(F)	I	R
62	1	129595-61951	COVER		1	1	1				
63	1	129595-61961	GASKET		1	1	1				
64	1	124550-66370	NUT, M6		1	1	1				
65	1	104104-67300	SPRING, RETURN		1	1	1				
66	1	22117-040000	WASHER, 4		1	1	1				
67	1	22117-060000	WASHER, 6		1	1	1				
68	1	22190-080000	WASHER, SEAL 8		2	2	2				
69	1	22190-100000	WASHER, SEAL 10		2	2	2				
69-1	1	43400-500430	SEAL WASHER 10S		2	2	2				N
		(B=EXXX)	(C=EXXX) (D=EXXX)								
70	1	22272-000060	RING, E- 6		2	2	2				
71	1	22287-060000	WASHER 6		3	3	3				Z
		(B=*1990.07)	(C=*1990.07) (D=*1990.07)								
72	1	22287-120000	WASHER, 12		1	1	1				
73	1	22360-040000	PIN, SNAP 4		2	2	2				
73-1	1	22372-040000	PIN, SNAP 4		2	2	2				N
		(B=EXXX)	(C=EXXX) (D=EXXX)								
74	1	22372-060000	PIN, SNAP 6		1	1	1				
75	1	23414-050000	GASKET, 5X1.0		1	1	1				
75-1	1	43400-500390	SEAL WASHER 6S		1	1	1				N
		(B=EXXX)	(C=EXXX) (D=EXXX)								
76	1	23887-100002	PLUG, 10		2	2	2				
77	1	24311-000080	O-RING, 1AP8.0				1				
77-1	1	24311-240100	O-RING, 1AP10A		1	1	1				S
			(D=E31796)								
78	1	24311-000110	O-RING, 1AP11.0		1	1	1				
79	1	26022-050102	SCREW, M5X10		8	8	8				
80	1	26106-060182	BOLT, M6X 18 PLATED		1	1	1				
81	1	26106-060202	BOLT, M6X 20 PLATED		6	6	6				
82	1	26366-080002	NUT, M8		1	1	1				
83	1	26557-060162	SCREW M 6X 16		3	3	3				
83-1	1	26106-060162	BOLT, M6X 16 PLATED		3	3	3				N
		(B=*1990.07)	(C=*1990.07) (D=*1990.07)								
84	1	26667-080002	NUT, CAP M8		1	1	1				
85	1	26756-060002	NUT, LOCK M6		2	2	2				
86	1	26756-080002	NUT, LOCK M8		1	1	1				
87	1	26776-120002	NUT, LOCK M12		2	2	2				
88	1	43400-500450	SEAL WASHER 12S		2	2	2				

N:Old $\overset{\text{Yes}}{\underset{\text{No}}{\leftrightarrow}}$ New, Q:Old $\overset{\text{No}}{\underset{\text{Yes}}{\leftrightarrow}}$ New, R:Old $\overset{\text{Yes}}{\underset{\text{Yes}}{\leftrightarrow}}$ New, S:Old $\overset{\text{No}}{\underset{\text{No}}{\leftrightarrow}}$ New, W:Add, Z:Discontinued, F:Interchangeable by set, K:Q'ty Change

Copyright (C) YANMAR CO., LTD. All RightsReserved.

Fig.38. GOVERNOR(4JH2E)

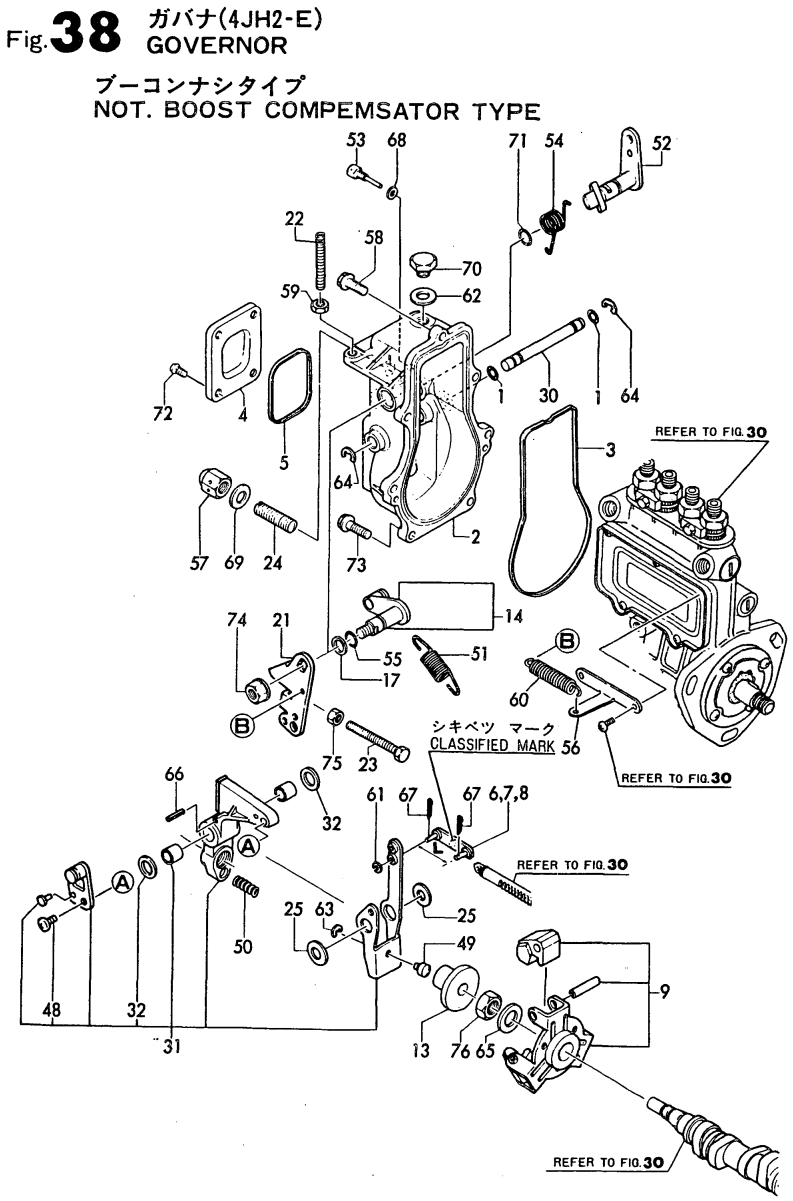

Remarks
NOT BOOST COMPEMSATOR TYPE.
1) SELECTIVE PART; CERTAIN THE CLAS
-SIFICATION MARK WHEN PLACE YOUR
ORDER. (REFER TO THE ILLUSTRATION)

(A)=4JH2E (D)=4JH2-DTE
(B)=4JH2-TE (E)=4JH2-UTE(B)
(C)=4JH2-HTE (F)=

No.	Lev.	Parts No.	Description	Q'ty (A)	(B)	(C)	(D)	(E)	(F)	I	R
1	1	129155-51280	O-RING, S6	2							
2	1	129155-61011	CASE, GOVERNOR	1							
3	1	129155-61050	GASKET	1							
4	1	129155-61060	COVER, GOVERNOR CASE	1							
5	1	129155-61070	GASKET	1							
6	1	129155-61120	LINK, L=30 MARK 0	1							1
7	1	129155-61130	LINK, L=31 MARK 1	1							1
8	1	129155-61140	LINK, L=30.5 MARK 05	1							1
9	1	129595-61200	WEIGHT ASSY,GOVERNOR	1							
13	1	129155-61341	SLEEVE	1							
14	1	129100-61400	SHAFT ASSY	1							
17	1	129155-61430	SPACER	1							
21	1	129499-61440	LEVER, CONTROL	1							
22	1	129155-61450	BOLT, LIMITER	1							
23	1	129155-61460	BOLT, IDLE	1							
24	1	129155-61470	BOLT, CONTROL	1							
25	1	129155-61480	SPACER ASSY	2							
30	1	129155-61490	SHAFT	1							
31	1	129500-61500	LEVER ASSY, GOVERNOR	1							
32	2	174307-51700	SHIM SET	2							
48	2	26022-060122	SCREW, M6X12	1							
49	1	129155-61540	SHIFTER	1							
50	1	129470-61650	SPRING, FUEL CONTROL	1							
51	1	129100-61730	SPRING, GOVERNOR	1							
52	1	129473-61801	LEVER, STOP	1							
53	1	129155-61810	PIN	1							
54	1	129100-61821	SPRING, RETURN	1							
55	1	129155-61830	O-RING, S10	1							
56	1	129499-61890	HOOK	1							
57	1	129100-61930	NUT, CAP	1							
58	1	129155-61950	BOLT	1							
59	1	124550-66370	NUT, M6	1							
60	1	104104-67300	SPRING, RETURN	1							
61	1	22117-040000	WASHER, 4	1							
62	1	22190-100000	WASHER, SEAL 10	1							
62-1	1	43400-500430	SEAL WASHER 10S	1						N	
	(A=EXXX)										
63	1	22272-000040	RING, E- 4	1							
64	1	22272-000060	RING, E- 6	2							
65	1	22287-120000	WASHER, 12	1							
66	1	22351-030016	PIN, SPRING 3.0X16	1							
67	1	22360-050000	SNAP PIN 5	2							
67-1	1	22372-040000	PIN, SNAP 4	2						N	
	(A=EXXX)										
68	1	23414-050000	GASKET, 5X1.0	1							
68-1	1	43400-500390	SEAL WASHER 6S	1						N	
	(A=EXXX)										
69	1	23414-100014	GASKET, 10X1.0	1							
70	1	23887-100002	PLUG, 10	1							
71	1	24311-240100	O-RING, 1AP10A	1							
72	1	26022-050102	SCREW, M5X10	4							

N:Old $\overset{\text{Yes}}{\underset{\text{No}}{\leftrightarrow}}$ New, Q:Old $\overset{\text{No}}{\underset{\text{Yes}}{\leftrightarrow}}$ New, R:Old $\overset{\text{Yes}}{\underset{\text{Yes}}{\leftrightarrow}}$ New, S:Old $\overset{\text{No}}{\underset{\text{No}}{\leftrightarrow}}$ New, W:Add, Z:Discontinued, F:Interchangeable by set, K:Q'ty Change

++ CONTINUE ++

Copyright (C) YANMAR CO., LTD. All RightsReserved.

Fig.38. GOVERNOR(4JH2E)

(A)=4JH2E
(B)=4JH2-TE
(C)=4JH2-HTE
(D)=4JH2-DTE
(E)=4JH2-UTE(B)
(F)=

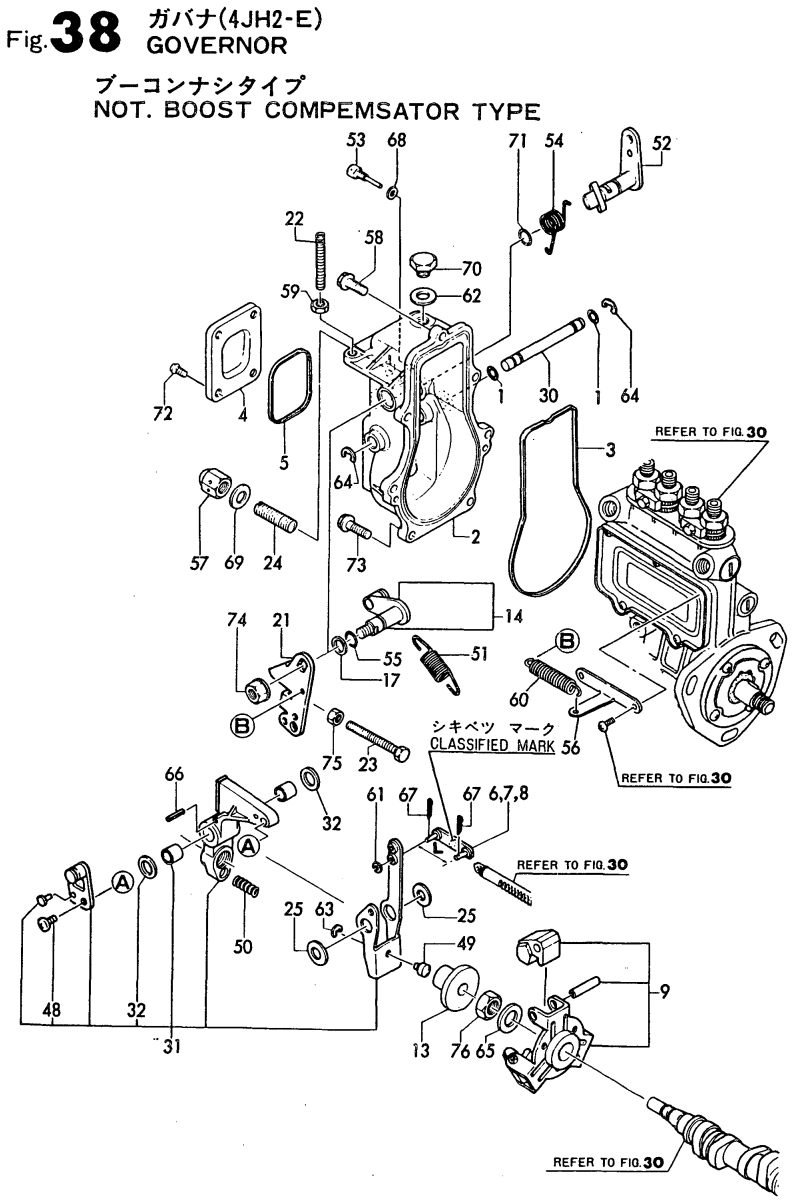

No.	Lev.	Parts No.	Description	Q'ty (A)	(B)	(C)	(D)	(E)	(F)	I	R
73	1	26106-060202	BOLT, M6X 20 PLATED	6							
74	1	26366-080002	NUT, M8	1							
75	1	26756-060002	NUT, LOCK M6	1							
76	1	26776-120002	NUT, LOCK M12	1							

Remarks
NOT BOOST COMPEMSATOR TYPE.
1) SELECTIVE PART; CERTAIN THE CLAS
-SIFICATION MARK WHEN PLACE YOUR
ORDER. (REFER TO THE ILLUSTRATION)

N:Old $\frac{\text{Yes}}{\text{No}}$ New, Q:Old $\frac{\text{No}}{\text{Yes}}$ New, R:Old $\frac{\text{Yes}}{\text{Yes}}$ New, S:Old $\frac{\text{No}}{\text{No}}$ New, W:Add, Z:Discontinued, F:Interchangeable by set, K:Q'ty Change

Copyright (C) YANMAR CO., LTD. All RightsReserved.

Fig.39. ENGINE STOP & COLD START DEVICE

Fig. 39 キカンテイシソウチ＆キャンセルケーブル ENGINE STOP & COLD START DEVICE

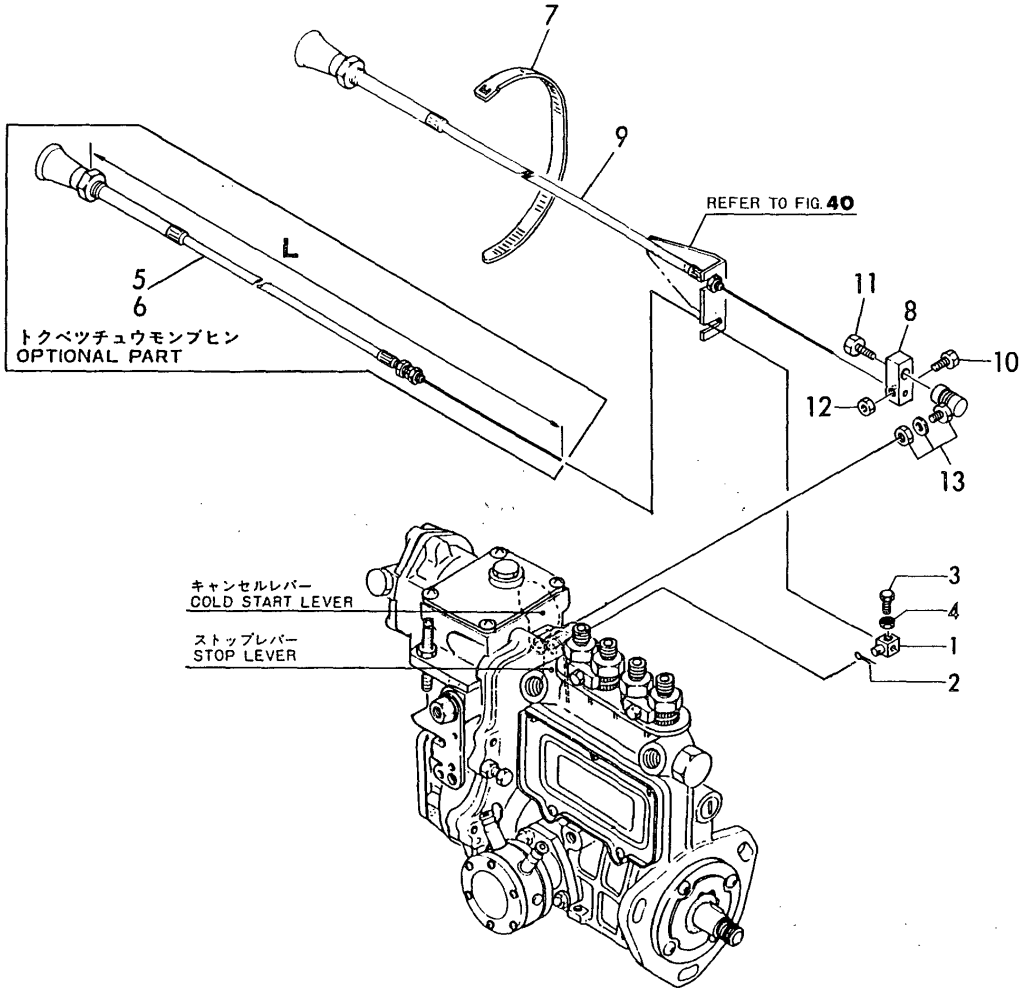

(A)=4JH2E
(B)=4JH2-TE
(C)=4JH2-HTE
(D)=4JH2-DTE
(E)=4JH2-UTE(B)
(F)=

No.	Lev.	Parts No.	Description	Q'ty (A)	(B)	(C)	(D)	(E)	(F)	I	R
1	1	129590-67310	RETAINER	1	1	1	1				
2	1	22414-250150	PIN, COTTER 2.5X15	1	1	1	1				
3	1	26116-050142	BOLT, M5X 14 PLATED	1	1	1	1				
4	1	26756-050002	NUT, LOCK M5	1	1	1	1				
5	1	129470-67550	CABLE, STOP L=4000	1	1	1	1				1
6	1	129470-67560	CABLE, STOP L=7000	1	1	1	1				1
7	1	121750-59890	BAND, 140		1	1	1				
8	1	129595-67310	RETAINER		1	1	1				
9	1	129590-67420	CABLE, L=500		1	1	1				
10	1	26116-050142	BOLT, M5X 14 PLATED		1	1	1				
11	1	26116-050202	BOLT, M5X 20 PLATED		1	1	1				
12	1	26756-050002	NUT, LOCK M5		1	1	1				
13	1	41710-001300	JOINT, BALL		1	1	1				

Remarks
1) OPTIONAL PARTS

N:Old $\xleftarrow[\text{No}]{\text{Yes}}$ New, Q:Old $\xleftarrow[\text{Yes}]{\text{No}}$ New, R:Old $\xleftarrow[\text{Yes}]{\text{Yes}}$ New, S:Old $\xleftarrow[\text{No}]{\text{No}}$ New, W:Add, Z:Discontinued, F:Interchangeable by set, K:Q'ty Change

Copyright (C) YANMAR CO., LTD. All RightsReserved.

Fig.40. SPEED REMOTE CONTROL DEVICE

Fig. 40 スピードコントロールソウチ
SPEED REMOTE CONTROL DEVICE

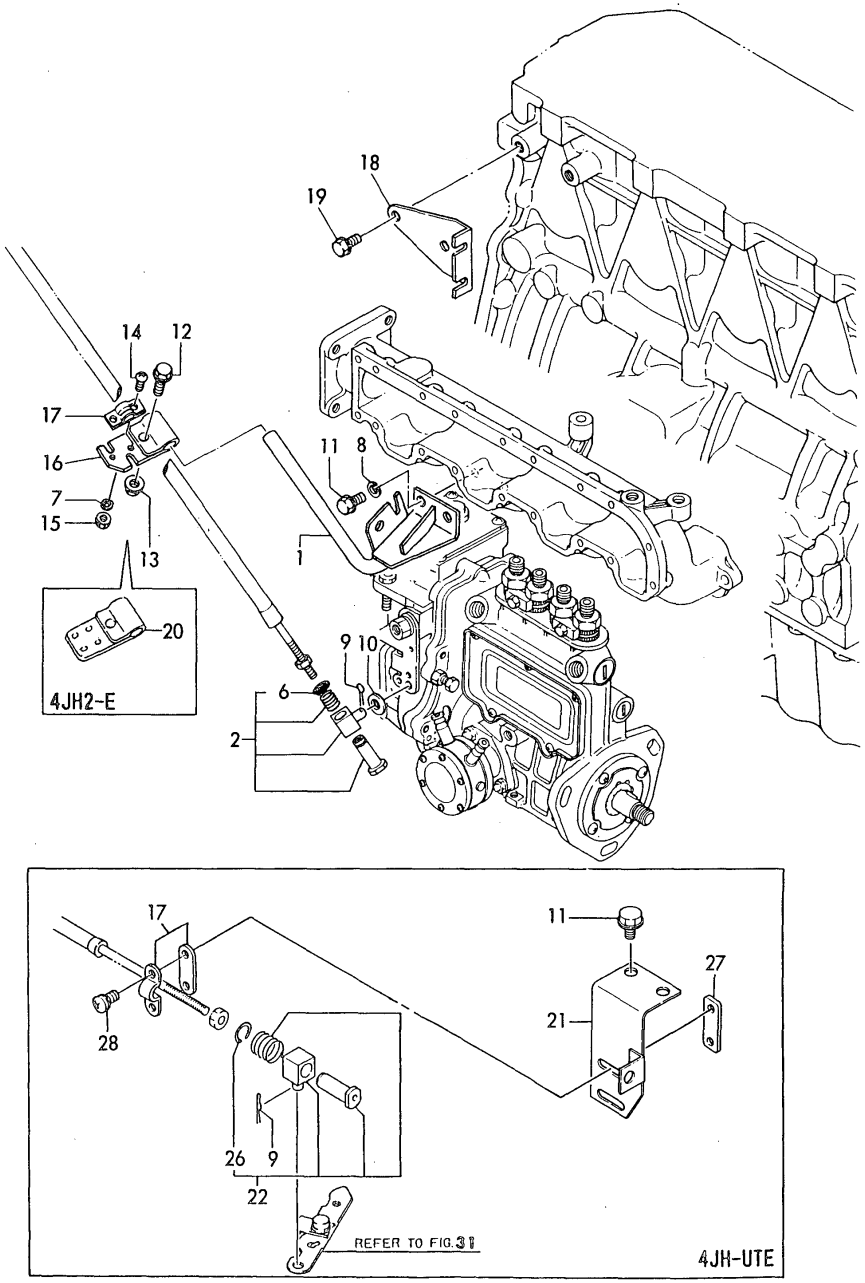

(A)=4JH2E
(B)=4JH2-TE
(C)=4JH2-HTE
(D)=4JH2-DTE
(E)=4JH2-UTE(B)
(F)=

No.	Lev.	Parts No.	Description	Q'ty (A)	(B)	(C)	(D)	(E)	(F)	I	R
1	1	129590-67101	BRACKET, GOVERNOR	1	1	1	1				
2	1	129470-67200	RETAINER ASSY	1	1	1	1				
6	2	22242-000100	RING, 10	1	1	1	1				
7	1	22217-050000	WASHER, SPRING 5	2	2	2	2				
8	1	22217-080000	WASHER, SPRING 8	2	2	2	2				
9	1	22414-250150	PIN, COTTER 2.5X15	1	1	1	1	1			
10	1	23414-080000	GASKET, 8X1.0	1	1	1	1				
11	1	26106-080122	BOLT, M8X 12 PLATED	2	2	2	2	2			
12	1	26106-080252	BOLT, M8X 25 PLATED	1	1	1	1				
13	1	26366-080002	NUT, M8	1	1	1	1				
14	1	26557-050122	SCREW, M5X12	2	2	2	2				
15	1	26716-050002	NUT, M5	2	2	2	2				
16	1	129590-67110	BRACKET, CABLE		1	1	1				
17	1	41710-000410	CLAMP	1	1	1	1	1			
18	1	129590-67140	BRACKET		1	1	1				
19	2	26106-080122	BOLT, M8X 12 PLATED		2	2	2				
20	1	41701-001720	BRACKET	1							
21	1	129574-67100	BRACKET					1			
22	1	105311-67200	RETAINER ASSY					1			
26	2	22242-000100	RING, 10					1			
27	1	121574-86320	RETAINER					1			
28	1	26022-050122	SCREW, M5X12					2			

N:Old ◄Yes/No► New, Q:Old ◄No/Yes► New, R:Old ◄Yes/Yes► New, S:Old ◄No/No► New, W:Add, Z:Discontinued, F:Interchangeable by set, K:Q'ty Change

Copyright (C) YANMAR CO., LTD. All RightsReserved.

Fig.41. STARTING MOTOR

Fig. 41 スターティングモータ
STARTING MOTOR

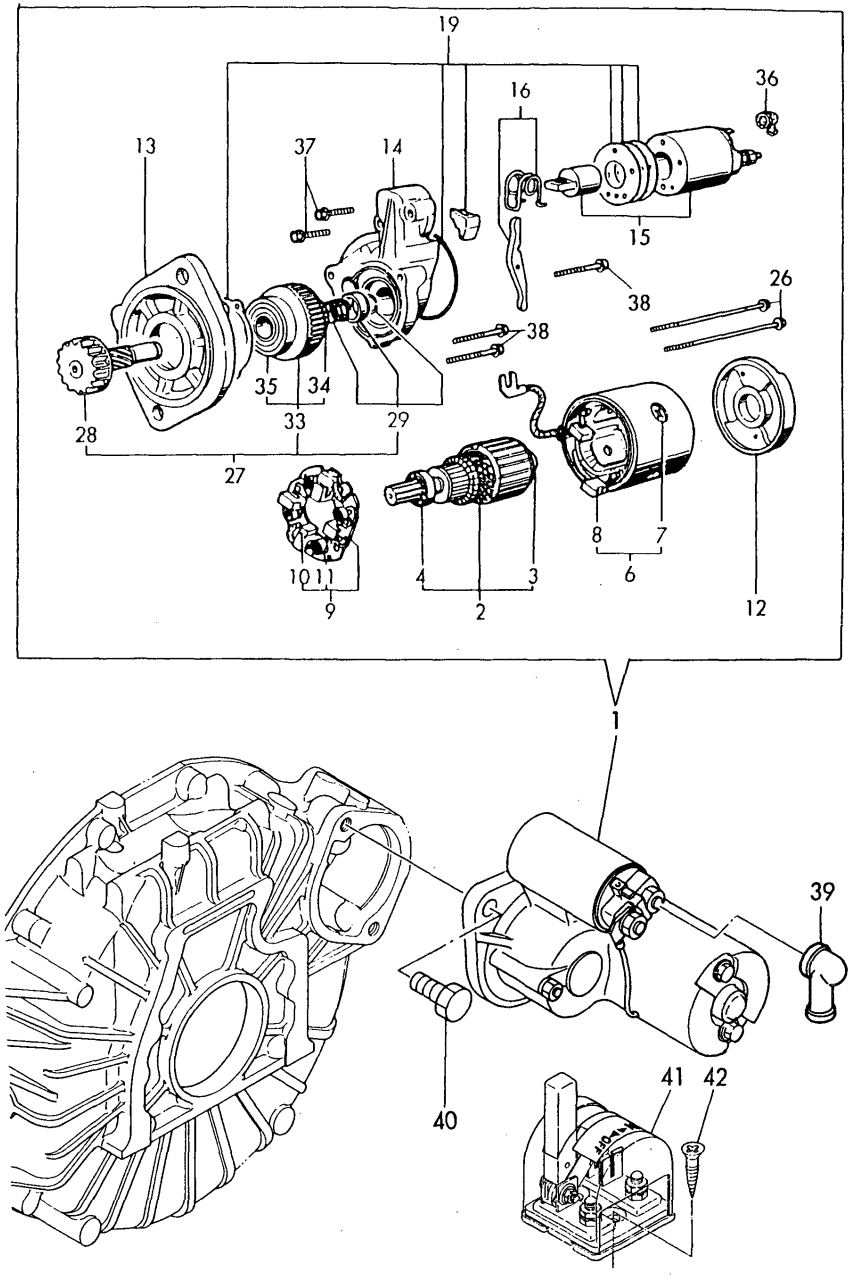

(A)=4JH2E (D)=4JH2-DTE
(B)=4JH2-TE (E)=4JH2-UTE(B)
(C)=4JH2-HTE (F)=

No.	Lev.	Parts No.	Description	Q'ty (A)	(B)	(C)	(D)	(E)	(F)	I	R
1	1	171008-77010	STARTER, S114-483	1	1	1	1	1			
2	2	171008-77400	ARMATURE ASSY	1	1	1	1	1			
3	3	171008-77410	BEARING	1	1	1	1	1			
4	3	171008-77420	BEARING	1	1	1	1	1			
6	2	171008-77440	COIL ASSY, FIELD	1	1	1	1	1			
7	3	171008-77450	SCREW	4	4	4	4	4			
8	3	171008-77460	BRUSH (+)	2	2	2	2	2			
9	2	171008-77470	HOLDER ASSY, BRUSH	1	1	1	1	1			
10	3	171008-77480	BRUSH (-)	2	2	2	2	2			
11	3	171008-77490	SPRING, BRUSH	4	4	4	4	4			
12	2	171008-77500	COVER, REAR	1	1	1	1	1			
13	2	171008-77510	CASE, GEAR	1	1	1	1	1			
14	2	171008-77520	HOUSING, CENTER	1	1	1	1	1			
15	2	171008-77530	SWITCH, MAGNETIC	1	1	1	1	1			
16	2	171008-77540	LEVER SET	1	1	1	1	1			
19	2	171008-77570	COVER KIT, DUST	1	1	1	1	1			
19-1	2	171008-77571	COVER KIT, DUST	1	1	1	1	1		N	
	(A=1190.08)	(B=1990.08)	(C=1990.08)	(D=1990.08)	(E=1990.08)						
26	2	171008-77640	BOLT, THROUGH	2	2	2	2	2			
27	2	171008-77650	PINION ASSY	1	1	1	1	1			
28	3	171008-77660	SHAFT	1	1	1	1	1			
29	3	171008-77670	STOPPER SET	1	1	1	1	1			
33	3	171008-77720	CLUTCH ASSY	1	1	1	1	1			
34	4	171008-77730	BEARING, BALL	1	1	1	1	1			
35	4	171008-77740	BEARING	1	1	1	1	1			
36	2	171008-77750	COVER	1	1	1	1	1			
37	2	26106-060322	BOLT, M6X 32 PLATED	2	2	2	2	2			
38	2	26106-060402	BOLT, M6X 40 PLATED	3	3	3	3	3			
39	1	124550-77030	COVER, TERMINAL	1	1	1	1	1			
40	1	26116-120302	BOLT, M12X 30 PLATED	2	2	2	2	2			
41	1	123310-77640	SWITCH, BATTERY	1	1	1	1	1			
42	1	22724-800380	SCREW, 8.0X38	2	2	2	2	2			

N:Old ←Yes/No→ New, Q:Old ←No/Yes→ New, R:Old ←Yes/Yes→ New, S:Old ←No/No→ New, W:Add, Z:Discontinued, F:Interchangeable by set, K:Q'ty Change

Copyright (C) YANMAR CO., LTD. All RightsReserved.

Fig.42. GENERATOR

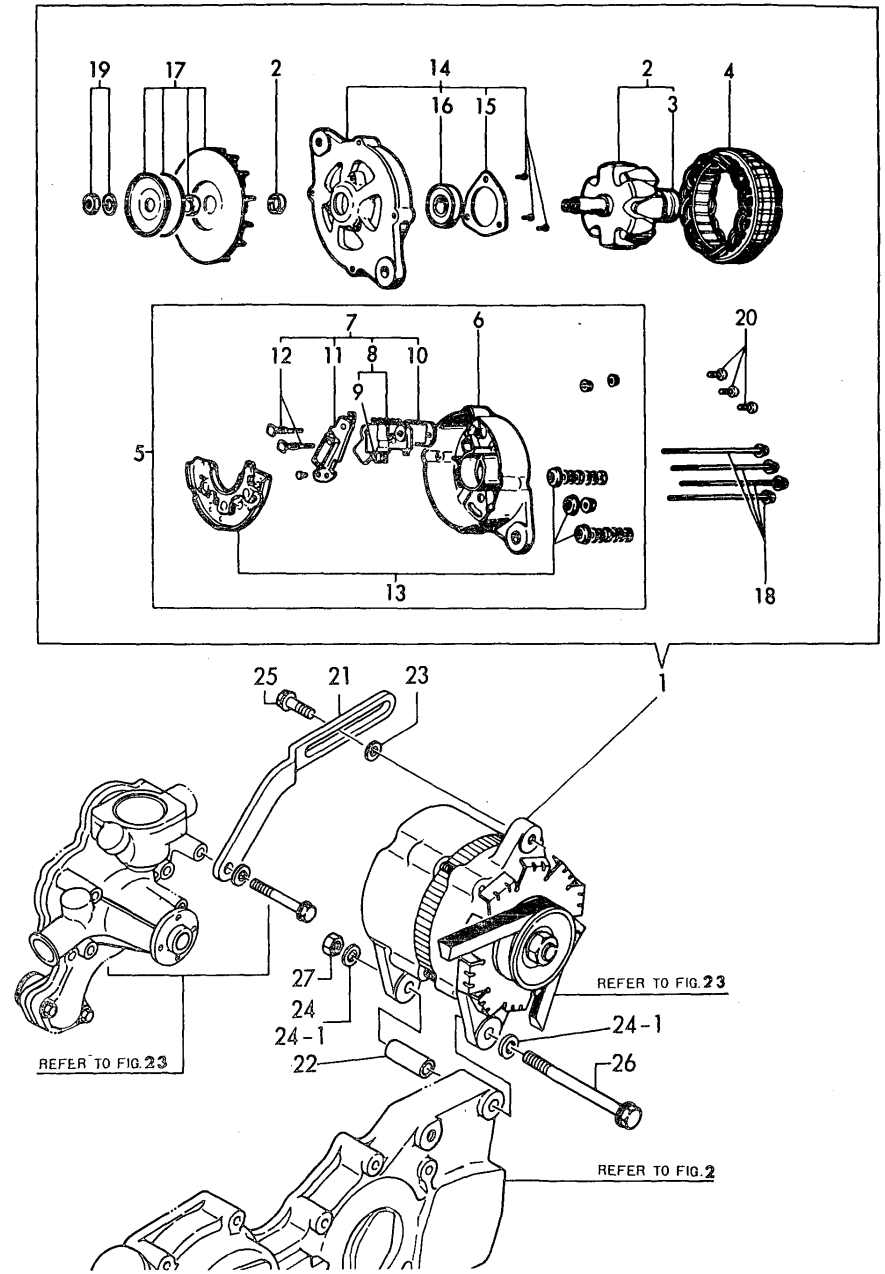

(A)=4JH2E (D)=4JH2-DTE
(B)=4JH2-TE (E)=4JH2-UTE(B)
(C)=4JH2-HTE (F)=

No.	Lev.	Parts No.	Description	Q'ty (A)	(B)	(C)	(D)	(E)	(F)	I	R
1	1	129772-77200	GENERATOR(12V-55A)	1	1	1	1	1			
2	2	XL15571001	ROTOR ASSY	1	1	1	1	1			
3	3	X6201SD	BALL BEARING	1	1	1	1	1			
4	2	XL15542001	STATOR ASSY	1	1	1	1	1			
5	2	XL15553002	COVER ASSY, REAR	1	1	1	1	1			
6	3	XL22553012	COVER, REAR	1	1	1	1	1			
7	3	XL1556315	REGULATOR ASSY,BRUSH	1	1	1	1	1			
8	4	XL2255330	BRUSH ASSY	1	1	1	1	1			1
9	4	XL12013262	BRUSH	2	2	2	2	2			
10	4	XTR1Z63	REGULATOR	1	1	1	1	1			
11	4	XL2251318	CONDENCER ASSY	1	1	1	1	1			
12	4	XL13513134	BOLT M5	2	2	2	2	2			
13	3	XL2253320	DIODE ASSY	1	1	1	1	1			
14	2	XL2253400	FRONT COVER ASSY	1	1	1	1	1			
15	3	XL15014042	BEARING RETAINER	1	1	1	1	1			
16	3	X6203BM	BALL BEARING	1	1	1	1	1			
17	2	XL22555001	PULLEY ASSY	1	1	1	1	1			
18	2	XL15018015	BOLT, THROUGH	4	4	4	4	4			
19	2	XL1501810	NUT ASSY, PULLEY	1	1	1	1	1			
20	2	XL15028001	SCREW ASSY	1	1	1	1	1			
21	1	129470-77330	ADJUSTER, BELT	1	1	1	1	1			
22	1	129470-77340	PIECE, DISTANCE	1	1	1	1	1			
23	1	22137-080000	WASHER, 8	1	1	1	1	1			
24	1	22137-100000	WASHER, 10	1	1	1	1	1			
24-1	1	22137-100000	WASHER, 10	2	2	2	2	2		K	
	(A=*1991.01)	(B=*1991.01)	(C=*1991.01)	(D=*1991.01)	(E=*1991.01)						
25	1	26106-080252	BOLT, M8X 25 PLATED	1	1	1	1	1			
26	1	26106-101152	BOLT, M10X115 PLATED	1	1	1	1	1			
26-1	1	26116-101202	BOLT, M10X120 PLATED	1	1	1	1	1		R	
	(A=*1989.11)	(B=*1989.11)	(C=*1989.11)	(D=*1989.11)	(E=*1989.11)						
27	1	26716-100002	NUT, M10	1	1	1	1	1			

N:Old $\xleftarrow[\text{No}]{\text{Yes}}$ New, Q:Old $\xleftarrow[\text{Yes}]{\text{No}}$ New, R:Old $\xleftarrow[\text{Yes}]{\text{Yes}}$ New, S:Old $\xleftarrow[\text{No}]{\text{No}}$ New, W:Add, Z:Discontinued, F:Interchangeable by set, K:Q'ty Change

Copyright (C) YANMAR CO., LTD. All RightsReserved.

Fig.43. CLUTCH REMOTE CONTROL(KBW20 & KBW21)

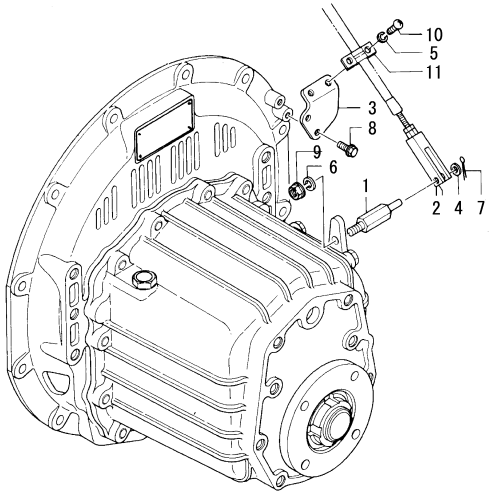

(A)=4JH2E
(B)=4JH2-TE
(C)=4JH2-HTE
(D)=4JH2-DTE
(E)=4JH2-UTE(B)
(F)=

No.	Lev.	Parts No.	Description	Q'ty (A)	(B)	(C)	(D)	(E)	(F)	I	R
1	1	129470-86250	JOINT	1	1	1	1				
2	1	128370-86280	CLEVIS, 12SQ-48L	1	1	1	1				
3	1	129470-86310	BRACKET, CABLE	1	1	1	1				
4	1	22113-060000	WASHER, 6	1	1	1	1				
5	1	22217-050000	WASHER, SPRING 5	2	2	2	2				
6	1	22217-080000	WASHER, SPRING 8	1	1	1	1				
7	1	22414-160100	PIN, COTTER 1.6X10	1	1	1	1				
8	1	26106-060162	BOLT, M6X 16 PLATED	2	2	2	2				
9	1	26366-080002	NUT, M8	1	1	1	1				
10	1	26557-050082	SCREW, M5X 8	2	2	2	2				
11	1	41710-000410	CLAMP	1	1	1	1				

Remarks
(A)4JH2SE, 4JH2GE, 4JH2GGE, 4JH2SPE, 4JH2GPE.
(B)4JH2S-TE, 4JH2G-TE.
(C)4JH2S-HTE, 4JH2G-HTE.
(D)4JH2S-DTE.

N:Old $\overset{\text{Yes}}{\underset{\text{No}}{\leftrightarrows}}$ New, Q:Old $\overset{\text{No}}{\underset{\text{Yes}}{\leftrightarrows}}$ New, R:Old $\overset{\text{Yes}}{\underset{\text{Yes}}{\leftrightarrows}}$ New, S:Old $\overset{\text{No}}{\underset{\text{No}}{\leftrightarrows}}$ New, W:Add, Z:Discontinued, F:Interchangeable by set, K:Q'ty Change

Copyright (C) YANMAR CO., LTD. All RightsReserved.

Fig.44. WIRE HARNESS & SENSOR(4JH2-UTE)

(A)=4JH2E
(B)=4JH2-TE
(C)=4JH2-HTE
(D)=4JH2-DTE
(E)=4JH2-UTE(B)
(F)=

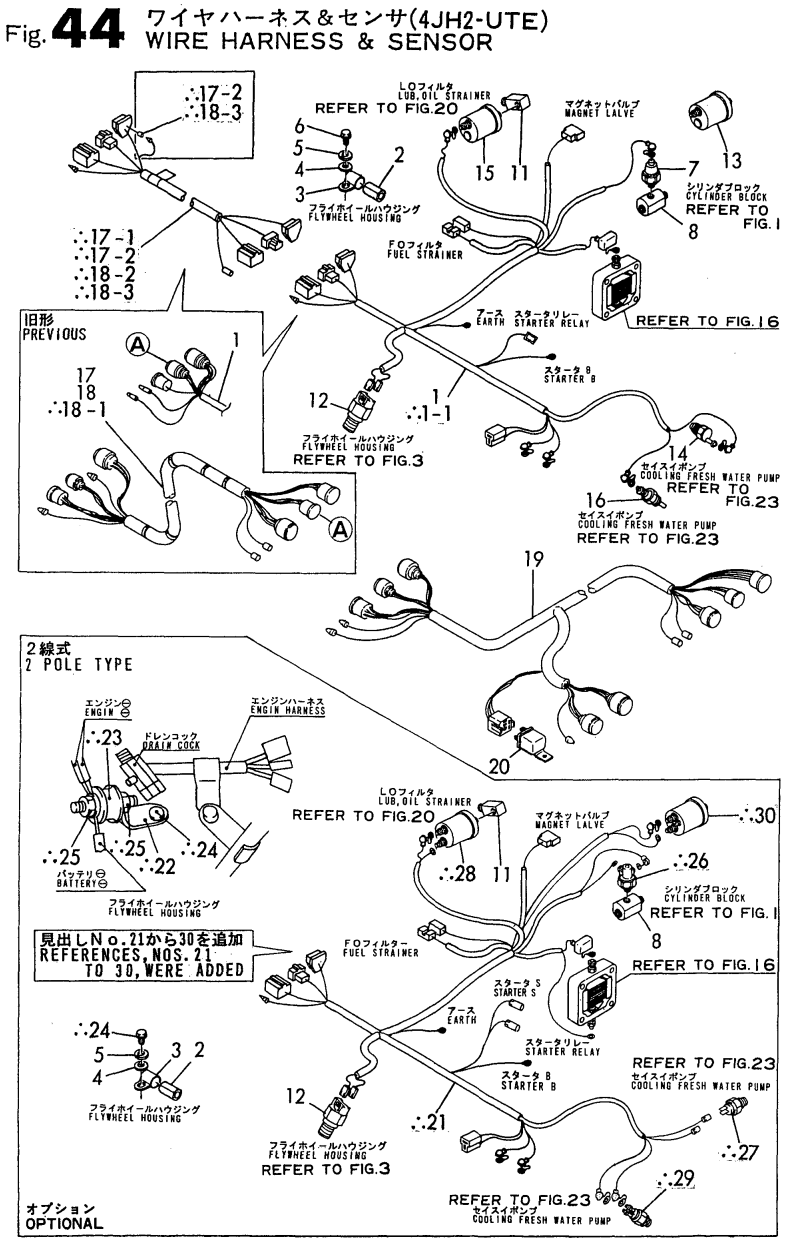

No.	Lev.	Parts No.	Description	Q'ty (A)	(B)	(C)	(D)	(E)	(F)	I	R
1	1	129574-77910	HARNESS, WIRE					1			
1-1	1	129574-77911	HARNESS, WIRE					1		S	
				(E=E40733)							
2	1	124770-77940	PROTECTOR					1			
3	1	124070-77950	CLAMP					1			
4	1	22137-080000	WASHER, 8					1			
5	1	22217-080000	WASHER, SPRING 8					1			
6	1	26106-080162	BOLT, M8X 16 PLATED					1			
7	1	124060-39451	SWITCH, 0.2KG					1			1
8	1	129470-39600	DAMPER ASSY					1			1
11	1	123482-39670	DAMPER					1			1
12	1	128170-91160	SENSOR					1			1
13	1	124413-91300	SENSOR					1			1
14	1	120130-91370	SWITCH, 100					1			1
15	1	144626-91560	SENSOR					1			1
16	1	144626-91570	SENDER UNIT					1			1
17	1	119171-77701	HARNESS, WIRE 6M					1			1
17-1	1	129574-77720	HARNESS, WIRE 6M					1		S	1
				(E=E40733)							
17-2	1	129574-77720-1	HARNESS, WIRE 6M					1		N	1
				(E=E40923)							
18	1	119171-77710	HARNESS, WIRE 4M					1			1
18-1	1	127610-77710	HARNESS, WIRE 3.8M					1		N	1
				(E=E40701)							
18-2	1	129574-77710	HARNESS, WIRE 4M					1		S	1
				(E=E40733)							
18-3	1	129574-77710-1	HARNESS, WIRE 4M					1		N	1
				(E=E40923)							
19	1	119171-77980	HARNESS, WIRE					1			1
20	1	124617-91850	RELAY					1			1
21	1	129574-77820	HARNESS, WIRE					1		W	2
				(E=E40923)							
22	1	129590-59200	RETAINER, PIPE					1		W	2
				(E=E40923)							
23	1	194555-62750	RUBBER, ABSORBER					1		W	2
				(E=E40923)							
24	1	26106-080142	BOLT, M8X 14 PLATED					2		W	2
				(E=E40923)							
25	1	26716-080002	NUT, M8					2		W	2
				(E=E40923)							
26	1	126630-91591	SWITCH,OIL PRESSURE					1		W	2
				(E=E40923)							
27	1	129570-91320	SWITCH, 100					1		W	2
				(E=E40923)							
28	1	126630-91560	SENDER UNIT					1		W	2
				(E=E40923)							
29	1	126630-91570	SENDER UNIT					1		W	2
				(E=E40923)							
30	1	46150-504360	SENSOR					1		W	2
				(E=E40923)							

Remarks
(1) OPTIONAL
(2) OPTIONAL : 2POLE TYPE

N:Old $\frac{\text{Yes}}{\text{No}}$ New, Q:Old $\frac{\text{No}}{\text{Yes}}$ New, R:Old $\frac{\text{Yes}}{\text{Yes}}$ New, S:Old $\frac{\text{No}}{\text{No}}$ New, W:Add, Z:Discontinued, F:Interchangeable by set, K:Q'ty Change

Copyright (C) YANMAR CO., LTD. All RightsReserved.

Fig.45. TOOL

(A)=4JH2E
(B)=4JH2-TE
(C)=4JH2-HTE
(D)=4JH2-DTE
(E)=4JH2-UTE(B)
(F)=

Fig. 45 コウグ TOOL

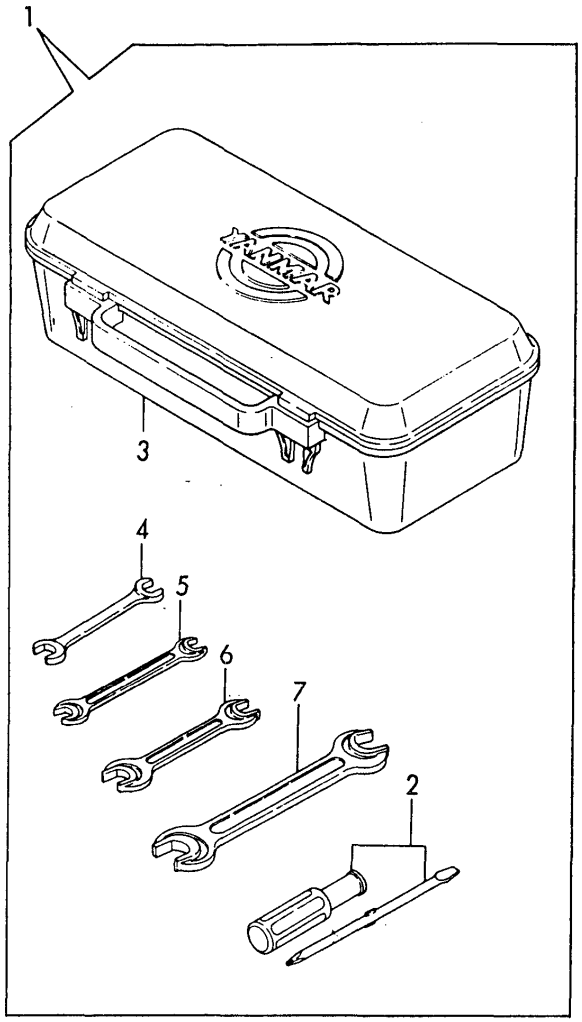

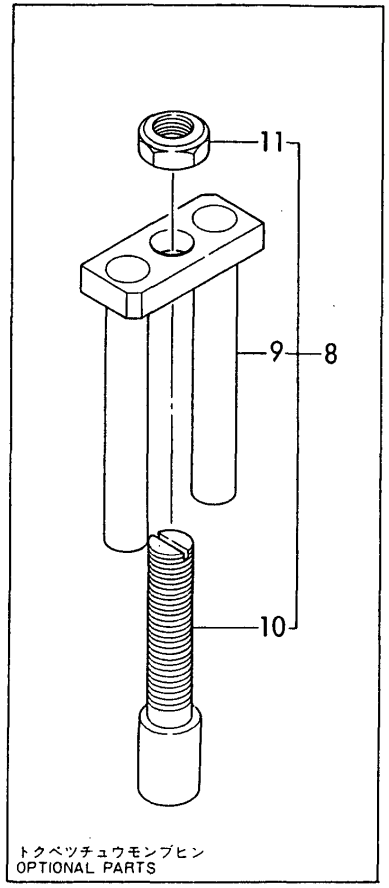

No.	Lev.	Parts No.	Description	Q'ty (A)	(B)	(C)	(D)	(E)	(F)	I	R
1	1	704507-92100	BOX ASSY, TOOL	1	1	1	1	1			
2	2	104200-92350	DRIVER, SCREW	1	1	1	1	1			
3	2	104200-92600	BOX, TOOL	1	1	1	1	1			
4	2	28110-100130	SPANNER, 10X13	1	1	1	1	1			
5	2	28110-120140	SPANNER, 12X14	1	1	1	1	1			
6	2	28110-170190	SPANNER, 17X19	1	1	1	1	1			
7	2	28110-220240	SPANNER, 22X24	1	1	1	1	1			
8	1	129470-92300	TOOL ASSY, NOZZLE	1	1	1	1	1			1
9	2	129470-92310	TOOL,NOZZLE REMOVE A	1	1	1	1	1			1
10	2	129470-92320	TOOL,NOZZLE REMOVE B	1	1	1	1	1			1
11	2	26716-120002	NUT, M12	1	1	1	1	1			1

Remarks
1) OPTIONAL PARTS

N:Old $\overset{\text{Yes}}{\underset{\text{No}}{\leftrightarrows}}$ New, Q:Old $\overset{\text{No}}{\underset{\text{Yes}}{\leftrightarrows}}$ New, R:Old $\overset{\text{Yes}}{\underset{\text{Yes}}{\leftrightarrows}}$ New, S:Old $\overset{\text{No}}{\underset{\text{No}}{\leftrightarrows}}$ New, W:Add, Z:Discontinued, F:Interchangeable by set, K:Q'ty Change

Copyright (C) YANMAR CO., LTD. All RightsReserved.

Fig.46. SPARE PART

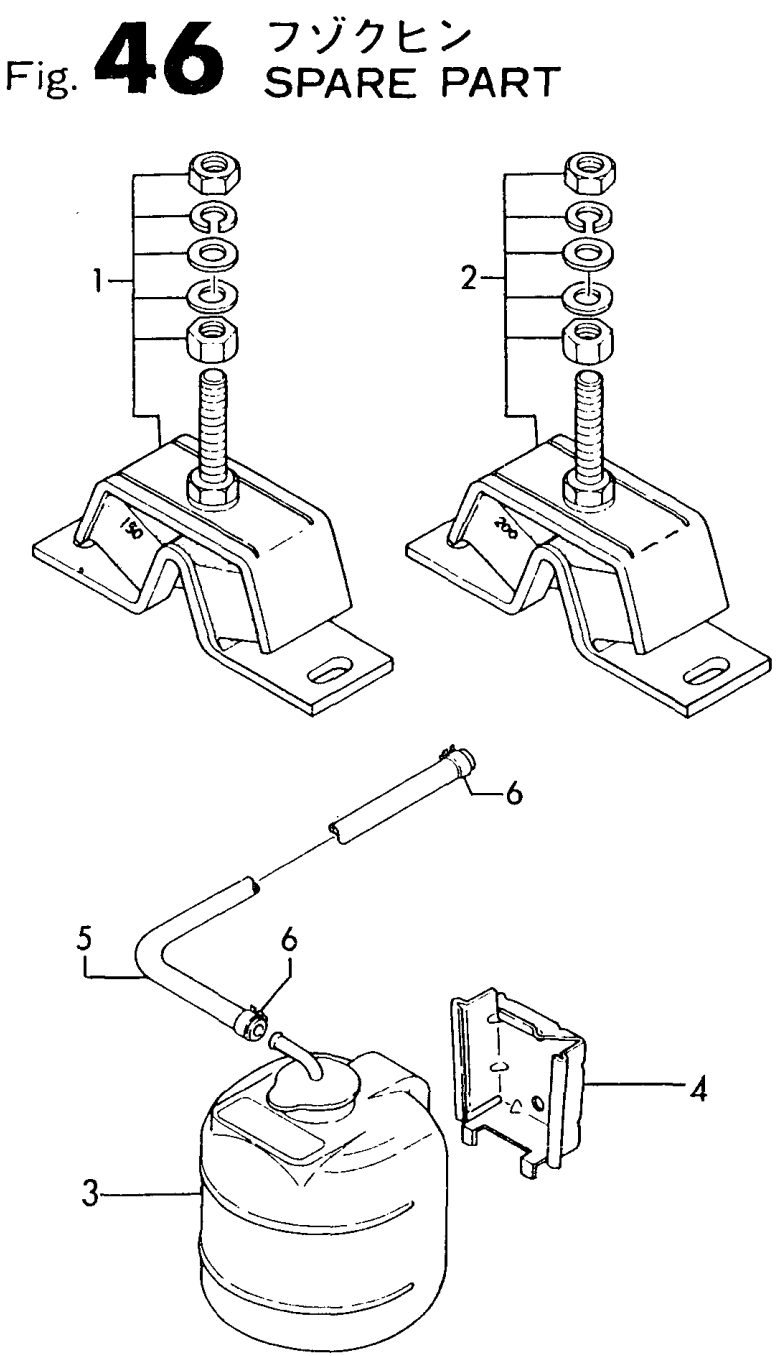

(A)=4JH2E
(B)=4JH2-TE
(C)=4JH2-HTE
(D)=4JH2-DTE
(E)=4JH2-UTE(B)
(F)=

No.	Lev.	Parts No.	Description	Q'ty (A)	(B)	(C)	(D)	(E)	(F)	I	R
1	1	121370-08351	MOUNT, FLEXIBLE 150	2	2	2	2	2			
2	1	129470-08350	MOUNT, FLEXIBLE 200	2	2	2	2	2			
3	1	120445-44530	TANK, SUB	1	1	1	1	1			
4	1	120445-44540	SUPPORT	1	1	1	1	1			
5	1	124790-44560	PIPE, WATER L=1000	1	1	1	1	1			
6	1	23010-013000	CLAMP 13	2	2	2	2	2			

N:Old ◄Yes/No► New, Q:Old ◄No/Yes► New, R:Old ◄Yes/Yes► New, S:Old ◄No/No► New, W:Add, Z:Discontinued, F:Interchangeable by set, K:Q'ty Change

Copyright (C) YANMAR CO., LTD. All RightsReserved.

Fig.47. GENERATOR

Fig. 47 ジェネレータ GENERATOR

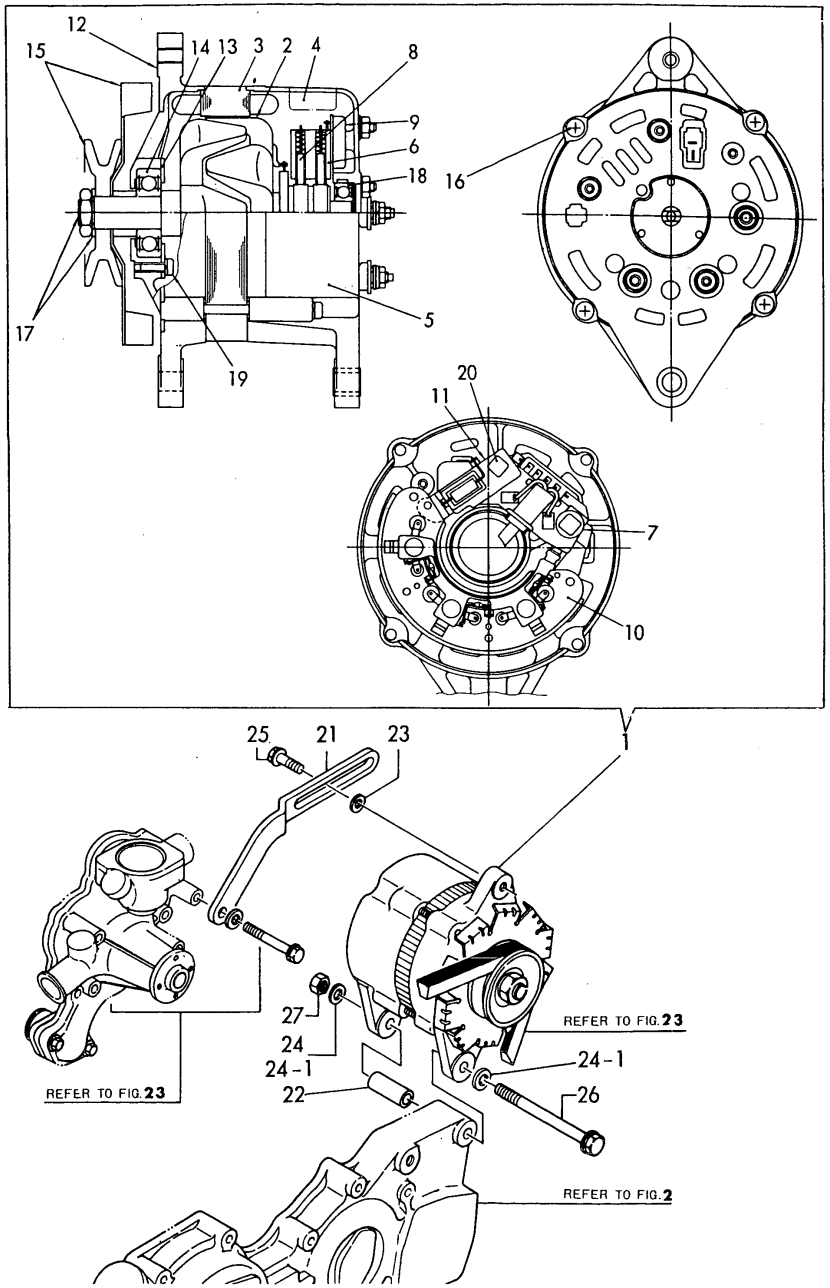

(A)=4JH2E (D)=4JH2-DTE
(B)=4JH2-TE (E)=4JH2-UTE(B)
(C)=4JH2-HTE (F)=

No.	Lev.	Parts No.	Description	Q'ty (A)	(B)	(C)	(D)	(E)	(F)	I	R
1	1	129470-77200	GENERATOR	1	1	1	1	1			
2	2	XL1805100	ROTOR ASY	1	1	1	1	1			
3	2	XL1801200	STATOR ASY	1	1	1	1	1			
4	2	XL1809300	COVER ASSY, REAR	1	1	1	1	1			
5	3	XL1805301	COVER, REAR	1	1	1	1	1			
6	3	XL1556315	REGULATOR ASSY,BRUSH	1	1	1	1	1			
7	4	XL2255320	DIODE L225-5320	1	1	1	1	1			
8	4	XL1801335	BRUSH	2	2	2	2	2			
9	4	XTR1Z63	REGULATOR	1	1	1	1	1			
10	3	XL1808320	DIODE ASY	1	1	1	1	1			
11	3	XL2251318	CONDENCER ASSY	1	1	1	1	1			
12	2	XL23534011	COVER ASSY, FRONT	1	1	1	1	1			
13	3	XL150M14041	RETAINER	1	1	1	1	1			
14	3	X6303BM	BALL BEARING 6303B	1	1	1	1	1			
15	2	XL1805500	PULLEY ASSY	1	1	1	1	1			
16	2	XL18018015	THROUGH BOLT	4	4	4	4	4			
17	2	XL1501810	NUT ASSY, PULLEY	1	1	1	1	1			
18	2	X6201NC	BALL BEARING	1	1	1	1	1			
19	2	XL15028001	SCREW ASSY	1	1	1	1	1			
20	2	124080-77520	BOLT M5	2	2	2	2	2			
21	1	129470-77330	ADJUSTER, BELT	1	1	1	1	1			
22	1	129470-77340	PIECE, DISTANCE	1	1	1	1	1			
23	1	22137-080000	WASHER, 8	1	1	1	1	1			
24	1	22137-100000	WASHER, 10	1	1	1	1	1			
24-1	1	22137-100000	WASHER, 10	2	2	2	2	2		K	
	(A=*1991.01)	(B=*1991.01)	(C=*1991.01)	(D=*1991.01)	(E=*1991.01)						
25	1	26106-080252	BOLT, M8X 25 PLATED	1	1	1	1	1			
26	1	26106-101152	BOLT, M10X115 PLATED	1	1	1	1	1			
26-1	1	26116-101202	BOLT, M10X120 PLATED	1	1	1	1	1		R	
	(A=*1989.11)	(B=*1989.11)	(C=*1989.11)	(D=*1989.11)	(E=*1989.11)						
27	1	26716-100002	NUT, M10	1	1	1	1	1			

N:Old $\frac{\text{Yes}}{\text{No}}$ New, Q:Old $\frac{\text{No}}{\text{Yes}}$ New, R:Old $\frac{\text{Yes}}{\text{Yes}}$ New, S:Old $\frac{\text{No}}{\text{No}}$ New, W:Add, Z:Discontinued, F:Interchangeable by set, K:Q'ty Change

Copyright (C) YANMAR CO., LTD. All RightsReserved.

Fig.48. MIXING ELBOW

Fig. **48** ミキシングエルボ MIXING ELBOW

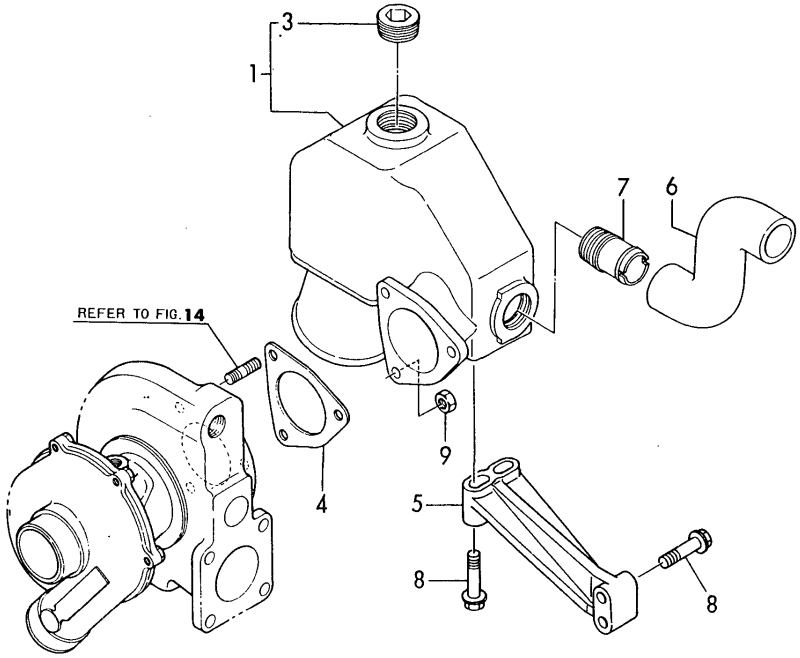

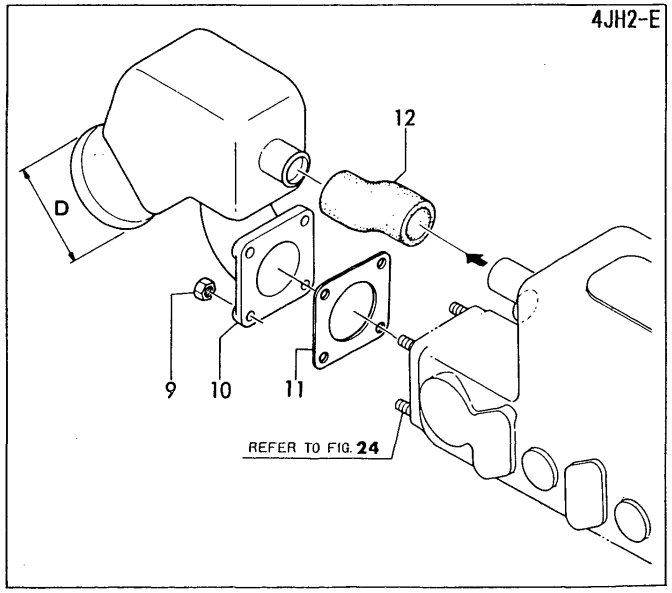

(A)=4JH2E (D)=4JH2-DTE
(B)=4JH2-TE (E)=4JH2-UTE(B)
(C)=4JH2-HTE (F)=

No.	Lev.	Parts No.	Description	Q'ty (A)	(B)	(C)	(D)	(E)	(F)	I	R
1	1	129472-13500	ELBOW ASSY		1	1	1	1			
3	2	129472-13560	PLUG, PT3/4		1	1	1	1			
4	1	129792-13520	GASKET				1				
4-1	1	129472-13520	GASKET (D=E31928)		1	1	1	1		N	
5	1	129472-13550	SUPPORT		1	1	1	1			
6	1	129472-49050	PIPE, WATER		1	1	1	1			
7	1	123325-49421	JOINT, PIPE		1	1	1	1			
8	1	26106-080352	BOLT, M8X 35 PLATED		4	4	4	4			
9	1	26703-080002	NUT, M8	4	3	3	3	3			
10	1	129470-13540	ELBOW	1							
11	1	129472-18090	GASKET	1							
12	1	129470-49050	PIPE, WATER	1							

N:Old $\xleftarrow[\text{No}]{\text{Yes}}$ New, Q:Old $\xleftarrow[\text{Yes}]{\text{No}}$ New, R:Old $\xleftarrow[\text{Yes}]{\text{Yes}}$ New, S:Old $\xleftarrow[\text{No}]{\text{No}}$ New, W:Add, Z:Discontinued, F:Interchangeable by set, K:Q'ty Change

Copyright (C) YANMAR CO., LTD. All RightsReserved.

Fig.49. ELECTRIC BILGE PUMP(12V)

P/C NEWS No:Y00R3512-11
PUBLISHED:2004/7

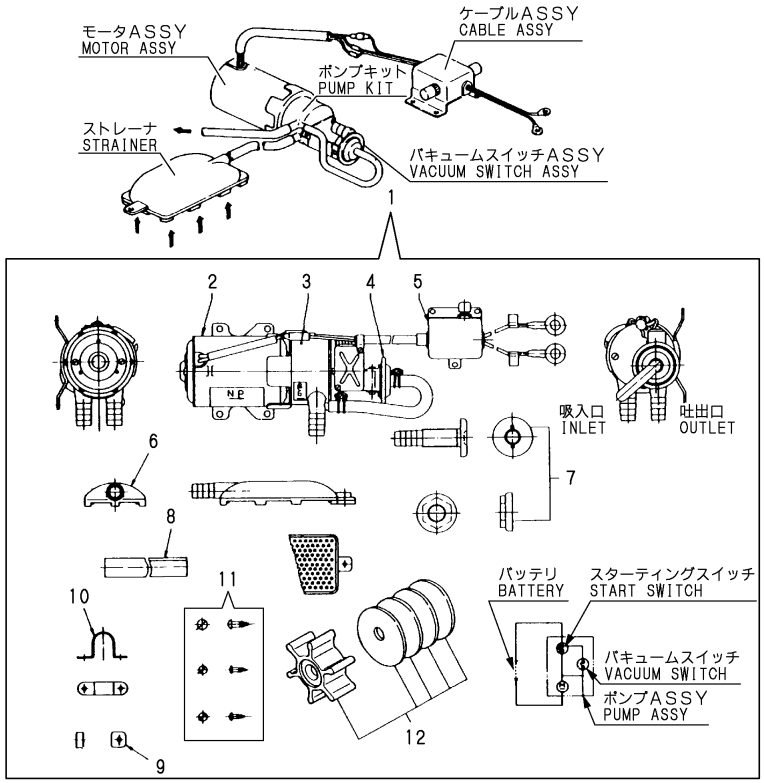

(A)=4JH2E
(B)=4JH2-TE
(C)=4JH2-HTE
(D)=4JH2-DTE
(E)=4JH2-UTE(B)
(F)=

No.	Lev.	Parts No.	Description	Q'ty (A)	(B)	(C)	(D)	(E)	(F)	I	R
1	1	977782-00121	PUMP ASSY, W/TIMMER	1	1	1	1	1			
2	2	XBP2901200	MOTOR ASSY.	1	1	1	1	1			M
2-1	2	XBP1902200	MOTER ASSY	1	1	1	1	1			
3	2	XBP1901300	PUMP SET	1	1	1	1	1			
4	2	XBP1902400	VACUUM SWITCH ASSY	1	1	1	1	1			
5	2	XBP1905500	CABLE ASSY.	1	1	1	1	1			
6	2	XBP1902810	STRAINER	1	1	1	1	1			
7	2	XBP1901820	OUTLET	1	1	1	1	1			
8	2	XBP1901830	HOSE	1	1	1	1	1			
9	2	XBP1901910	SPACER	1	1	1	1	1			
10	2	XBP1901920	CLAMP	1	1	1	1	1			
11	2	XBP1901950	SCREW SET	1	1	1	1	1			
12	2	947859-20010	IMPELLER	1	1	1	1	1			

Remarks
(M)MISPRINT:REFER TO THE NEXT ITEM.

N:Old $\overset{\text{Yes}}{\underset{\text{No}}{\leftrightarrow}}$ New, Q:Old $\overset{\text{No}}{\underset{\text{Yes}}{\leftrightarrow}}$ New, R:Old $\overset{\text{Yes}}{\underset{\text{Yes}}{\leftrightarrow}}$ New, S:Old $\overset{\text{No}}{\underset{\text{No}}{\leftrightarrow}}$ New, W:Add, Z:Discontinued, F:Interchangeable by set, K:Q'ty Change

Copyright (C) YANMAR CO., LTD. All RightsReserved.

Fig.50. SEA WATER FILTER

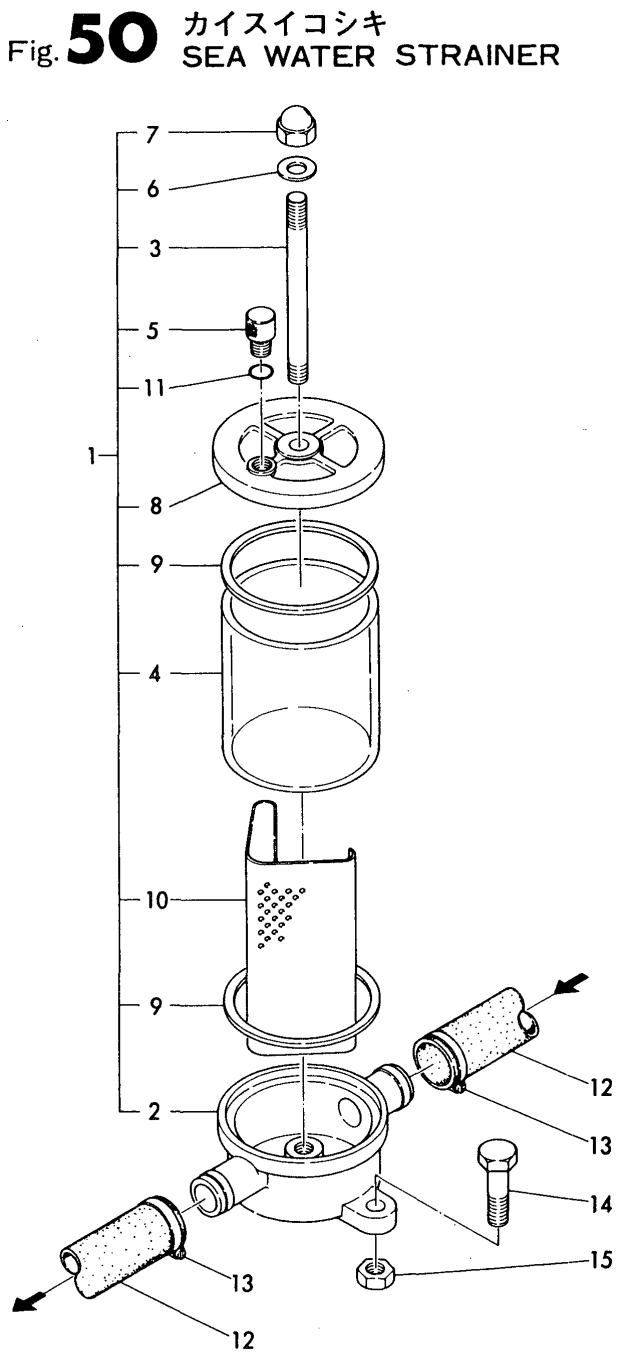

(A)=4JH2E
(B)=4JH2-TE
(C)=4JH2-HTE
(D)=4JH2-DTE
(E)=4JH2-UTE(B)
(F)=

No.	Lev.	Parts No.	Description	Q'ty (A)	(B)	(C)	(D)	(E)	(F)	I	R
1	1	919400-02500	STRAINER	1	1	1	1	1			
2	2	XTST25S001	BODY	1	1	1	1	1			
3	2	XTST25S002	BOLT M 8X125	1	1	1	1	1			
4	2	XTST25S003	PIPE, OUTER	1	1	1	1	1			
5	2	XTST25S004	PLUG M 8	1	1	1	1	1			
6	2	XTST25S005	PACKING	1	1	1	1	1			
7	2	26664-080002	NUT, CAP M8	1	1	1	1	1			
8	2	XTST25S007	COVER	1	1	1	1	1			
9	2	XTST25S008	PACKING	2	2	2	2	2			
10	2	XTST25S009	FILTER	1	1	1	1	1			
11	2	24311-000060	O-RING, 1AP6.0	1	1	1	1	1			
12	1	23072-101000	HOSE, 10X1000	1	1	1	1	1			
13	1	23000-041000	CLAMP, 41	2	2	2	2	2			
14	1	26116-080302	BOLT, M8X 30 PLATED	2	2	2	2	2			
15	1	26703-080002	NUT, M8	2	2	2	2	2			

N:Old $\frac{\text{Yes}}{\text{No}}$ New, Q:Old $\frac{\text{No}}{\text{Yes}}$ New, R:Old $\frac{\text{Yes}}{\text{Yes}}$ New, S:Old $\frac{\text{No}}{\text{No}}$ New, W:Add, Z:Discontinued, F:Interchangeable by set, K:Q'ty Change

Copyright (C) YANMAR CO., LTD. All RightsReserved.

Fig.51. FUEL TANK

Fig. 51 FOタンク
FUEL TANK

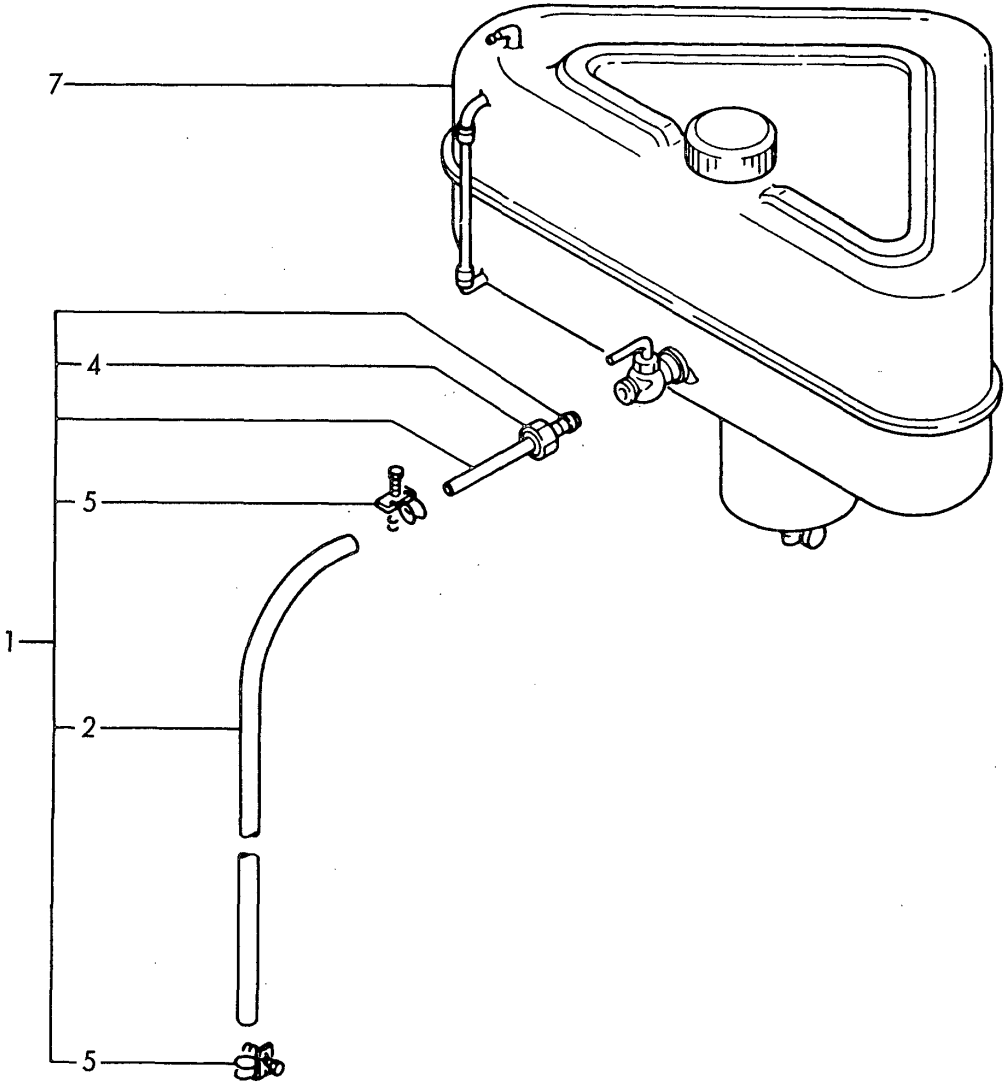

(A)=4JH2E
(B)=4JH2-TE
(C)=4JH2-HTE
(D)=4JH2-DTE
(E)=4JH2-UTE(B)
(F)=

No.	Lev.	Parts No.	Description	Q'ty (A)	(B)	(C)	(D)	(E)	(F)	I	R
1	1	124070-59060	PIPE ASSY, FUEL	1	1	1	1	1			
2	2	124070-59130	PIPE, FUEL 2M	1	1	1	1	1			
4	2	138603-59380	CAP NUT	1	1	1	1	1			
5	2	23010-014000	CLAMP, 14	2	2	2	2	2			
7	1	83213-003012	TANK (30L), FUEL	1	1	1	1	1			

N:Old ◄Yes/No► New, Q:Old ◄No/Yes► New, R:Old ◄Yes/Yes► New, S:Old ◄No/No► New, W:Add, Z:Discontinued, F:Interchangeable by set, K:Q'ty Change

Copyright (C) YANMAR CO., LTD. All RightsReserved.

Fig.52. ENGINE STOP DEVICE

Fig. 52 キカンテイシソウチ ENGINE STOP DEVICE

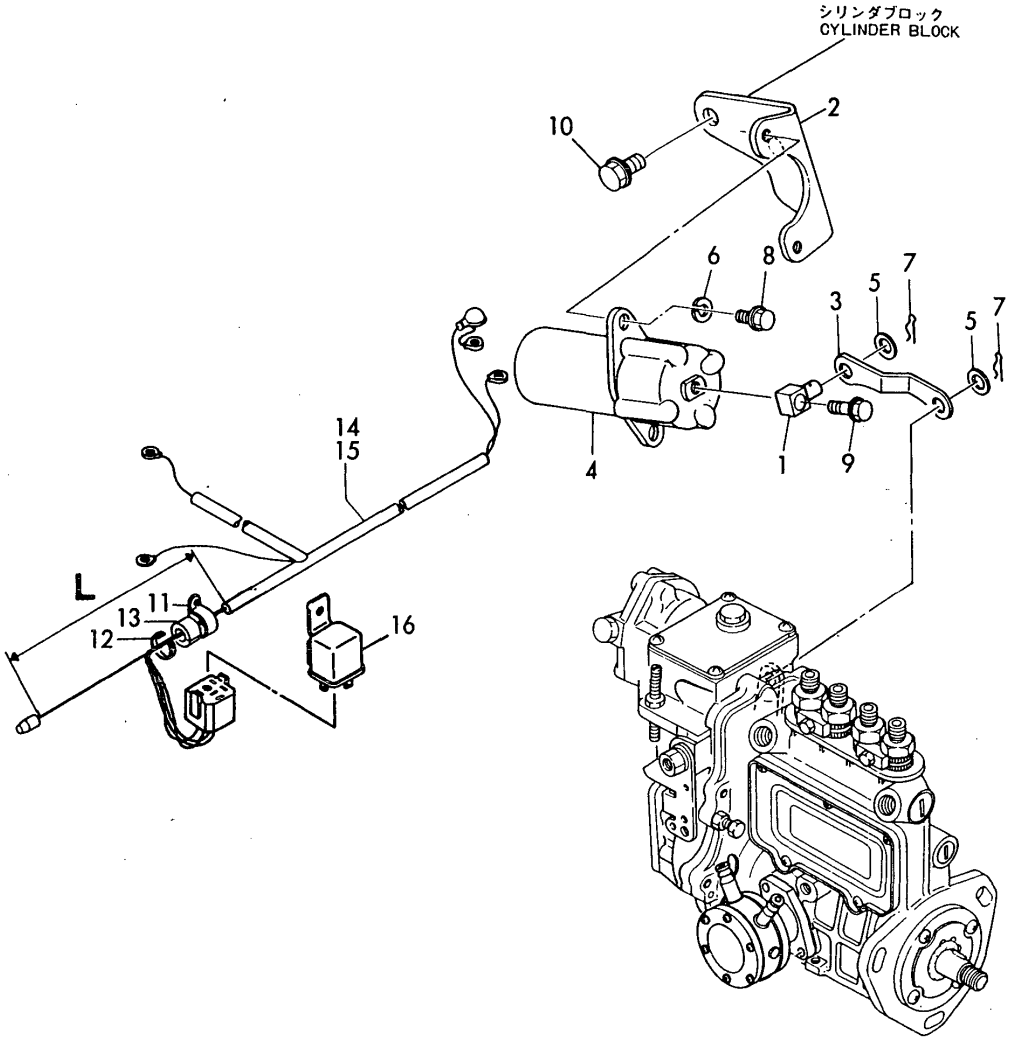

(A)=4JH2E
(B)=4JH2-TE
(C)=4JH2-HTE
(D)=4JH2-DTE
(E)=4JH2-UTE(B)
(F)=

No.	Lev.	Parts No.	Description	Q'ty (A)	(B)	(C)	(D)	(E)	(F)	I	R
1	1	171078-66551	PIN	1	1	1	1				
2	1	129470-67300	BRACKET, SOLENOID	1			1				
2-1	1	129573-67300	BRACKET, SOLENOID		1	1	1			N	
			(D=E31796)								
3	1	129470-67310	LINK	1	1	1	1				
4	1	129470-67320	SOLENOID, STOP 12V	1	1	1	1				
5	1	22117-080000	WASHER, 8	2	2	2	2				
6	1	22217-060000	WASHER, SPRING 6	2	2	2	2				
7	1	22360-080000	SNAP PIN 8	2	2	2	2				
8	1	26106-060102	BOLT, M6X 10 PLATED	2	2	2	2				
9	1	26106-060202	BOLT, M6X 20 PLATED	1	1	1	1				
10	1	26106-080122	BOLT, M8X 12 PLATED	2	2	2	2				
11	1	124770-49310	RETAINER	1	1	1	1				
12	1	121750-59890	BAND, 140	1	1	1	1				
13	1	123682-77710	PROTECTOR	1	1	1	1				
14	1	129470-77970	HARNESS, WIRE L4000	1	1	1	1				
15	1	129470-77980	HARNESS, WIRE L7000	1	1	1	1				
16	1	124617-91850	RELAY	1	1	1	1				

N:Old ◄Yes/No► New, Q:Old ◄No/Yes► New, R:Old ◄Yes/Yes► New, S:Old ◄No/No► New, W:Add, Z:Discontinued, F:Interchangeable by set, K:Q'ty Change

Copyright (C) YANMAR CO., LTD. All RightsReserved.

Fig.53. WIRE HARNESS & SENSOR(B-2 TYPE)

Fig. 53 ワイヤーハーネス＆センサ(B-2 TYPE) WIRE HARNESS & SENSOR

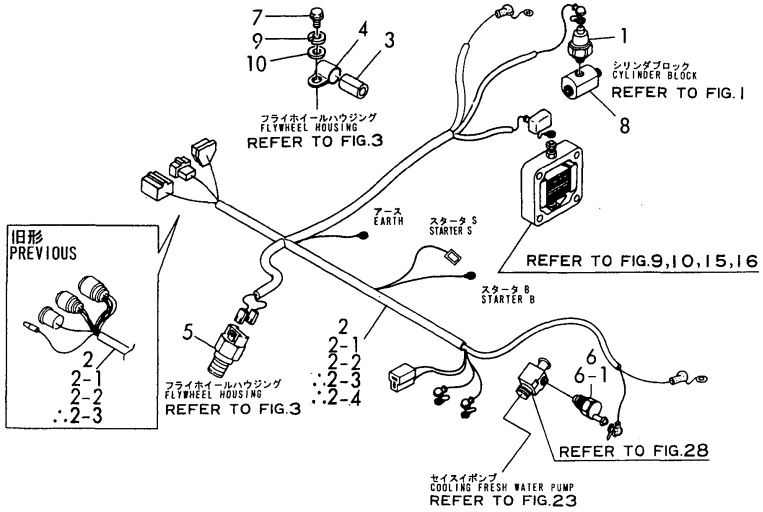

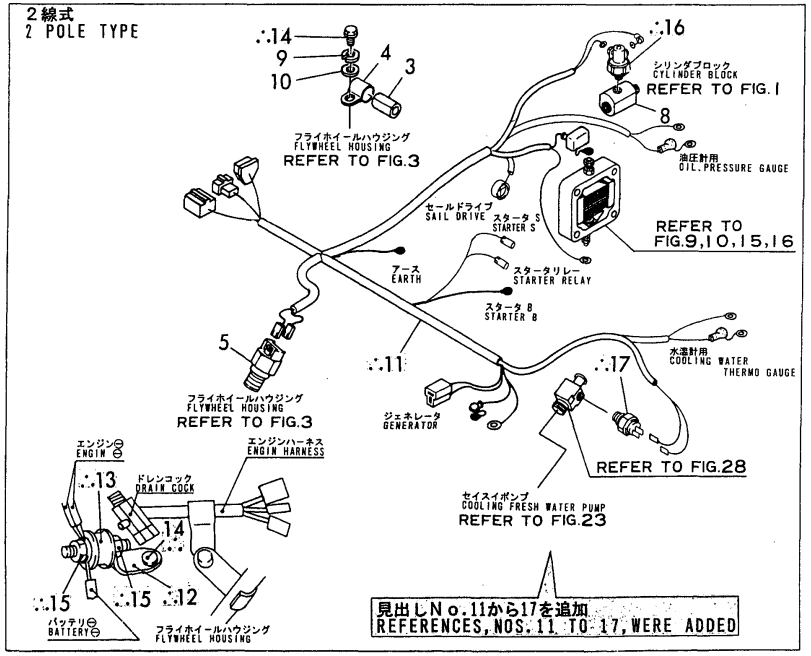

(A)=4JH2E (D)=4JH2-DTE
(B)=4JH2-TE (E)=4JH2-UTE(B)
(C)=4JH2-HTE (F)=

No.	Lev.	Parts No.	Description	Q'ty (A)	(B)	(C)	(D)	(E)	(F)	I	R
1	1	124060-39451	SWITCH, 0.2KG	1	1	1	1	1			
2	1	129470-77920	HARNESS, WIRE				1				
2-1	1	129573-77920	HARNESS, WIRE	1	1	1	1	1		S	
			(D=E31796)								
2-2	1	129573-77930	HARNESS, WIRE	1	1	1	1	1		R	
	(A=*1990.01)	(B=*1990.01)	(C=*1990.01) (D=*1990.01)	(E=*1990.01)							
2-3	1	129573-77931	HARNESS, WIRE	1	1	1	1			N	
	(A=E06661)	(B=E13961)	(C=E23085) (D=E34344)								
2-4	1	129573-77932	HARNESS, WIRE	1	1	1	1			S	
	(A=E07099)	(B=E14311)	(C=E23261) (D=E34536)								
3	1	124770-77940	PROTECTOR	1	1	1	1	1			
4	1	124070-77950	CLAMP	1	1	1	1	1			
5	1	128170-91160	SENSOR	1	1	1	1	1			
6	1	127610-91350	SWITCH, 95				1				
6-1	1	120130-91370	SWITCH, 100	1	1	1	1	1		N	
			(D=E31796)								
7	1	26106-080162	BOLT, M8X 16 PLATED	1	1	1	1	1			
8	1	129470-39600	DAMPER ASSY	1	1	1	1	1			
9	1	22217-080000	WASHER, SPRING 8	1	1	1	1	1			
10	1	22137-080000	WASHER, 8	1	1	1	1	1			
11	1	129570-77820	HARNESS, WIRE	1	1	1	1			W	1
	(A=E07940)	(B=E14619)	(C=E23484) (D=E34965)								
12	1	129590-59200	RETAINER, PIPE	1	1	1	1			W	1
	(A=E07940)	(B=E14619)	(C=E23484) (D=E34965)								
13	1	194555-62750	RUBBER, ABSORBER	1	1	1	1			W	1
	(A=E07940)	(B=E14619)	(C=E23484) (D=E34965)								
14	1	26106-080142	BOLT, M8X 14 PLATED	2	2	2	2			W	1
	(A=E07940)	(B=E14619)	(C=E23484) (D=E34965)								
15	1	26716-080002	NUT, M8	2	2	2	2			W	1
	(A=E07940)	(B=E14619)	(C=E23484) (D=E34965)								
16	1	126630-91591	SWITCH,OIL PRESSURE	1	1	1	1			W	1
	(A=E07940)	(B=E14619)	(C=E23484) (D=E34965)								
17	1	129570-91320	SWITCH, 100	1	1	1	1			W	1
	(A=E07940)	(B=E14619)	(C=E23484) (D=E34965)								

Remarks
(1) 2POLE TYPE.

N:Old $\xleftarrow[\text{No}]{\text{Yes}}$ New, Q:Old $\xleftarrow[\text{Yes}]{\text{No}}$ New, R:Old $\xleftrightarrow[\text{Yes}]{\text{Yes}}$ New, S:Old $\xleftarrow[\text{No}]{\text{No}}$ New, W:Add, Z:Discontinued, F:Interchangeable by set, K:Q'ty Change

Copyright (C) YANMAR CO., LTD. All RightsReserved.

Fig.54. WIRE HARNESS & SENSOR(C,D,E TYPE)

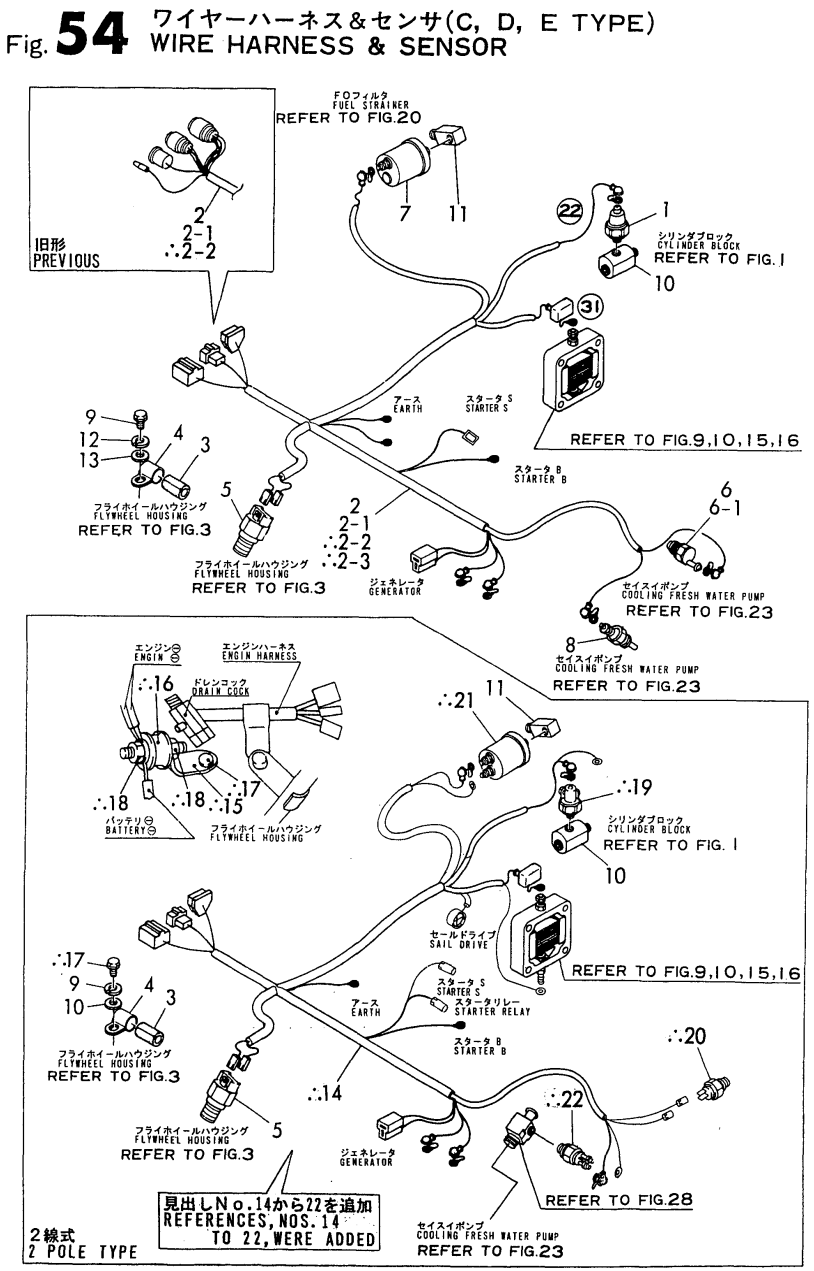

(A)=4JH2E (D)=4JH2-DTE
(B)=4JH2-TE (E)=4JH2-UTE(B)
(C)=4JH2-HTE (F)=

No.	Lev.	Parts No.	Description	Q'ty (A)	(B)	(C)	(D)	(E)	(F)	I	R
1	1	124060-39451	SWITCH, 0.2KG	1	1	1	1	1			
2	1	129470-77930	HARNESS, WIRE				1				
2-1	1	129573-77930	HARNESS, WIRE	1	1	1	1	1		S	
			(D=E31796)								
2-2	1	129573-77931	HARNESS, WIRE	1	1	1	1			N	
	(A=E06661)	(B=E13961)	(C=E23085) (D=E34344)								
2-3	1	129573-77932	HARNESS, WIRE	1	1	1	1			S	
	(A=E07099)	(B=E14311)	(C=E23261) (D=E34536)								
3	1	124770-77940	PROTECTOR	1	1	1	1	1			
4	1	124070-77950	CLAMP	1	1	1	1	1			
5	1	128170-91160	SENSOR	1	1	1	1	1			
6	1	127610-91350	SWITCH, 95				1				
6-1	1	120130-91370	SWITCH, 100	1	1	1	1	1		N	
			(D=E31796)								
7	1	144626-91560	SENSOR	1	1	1	1	1			
8	1	144626-91570	SENDER UNIT	1	1	1	1	1			
9	1	26106-080162	BOLT, M8X 16 PLATED	1	1	1	1	1			
10	1	129470-39600	DAMPER ASSY	1	1	1	1	1			
11	1	123482-39670	DAMPER	1	1	1	1	1			
12	1	22217-080000	WASHER, SPRING 8	1	1	1	1	1			
13	1	22137-080000	WASHER, 8	1	1	1	1	1			
14	1	129570-77820	HARNESS, WIRE	1	1	1	1			W	1
	(A=E07940)	(B=E14619)	(C=E23484) (D=E34965)								
15	1	129590-59200	RETAINER, PIPE	1	1	1	1			W	1
	(A=E07940)	(B=E14619)	(C=E23484) (D=E34965)								
16	1	194555-62750	RUBBER, ABSORBER	1	1	1	1			W	1
	(A=E07940)	(B=E14619)	(C=E23484) (D=E34965)								
17	1	26106-080142	BOLT, M8X 14 PLATED	2	2	2	2			W	1
	(A=E07940)	(B=E14619)	(C=E23484) (D=E34965)								
18	1	26716-080002	NUT, M8	2	2	2	2			W	1
	(A=E07940)	(B=E14619)	(C=E23484) (D=E34965)								
19	1	126630-91591	SWITCH,OIL PRESSURE	1	1	1	1			W	1
	(A=E07940)	(B=E14619)	(C=E23484) (D=E34965)								
20	1	129570-91320	SWITCH, 100	1	1	1	1			W	1
	(A=E07940)	(B=E14619)	(C=E23484) (D=E34965)								
21	1	126630-91560	SENDER UNIT	1	1	1	1			W	1
	(A=E07940)	(B=E14619)	(C=E23484) (D=E34965)								
22	1	126630-91570	SENDER UNIT	1	1	1	1			W	1
	(A=E07940)	(B=E14619)	(C=E23484) (D=E34965)								

Remarks
(1) 2POLE TYPE.

N:Old $\overset{\text{Yes}}{\underset{\text{No}}{\leftrightarrow}}$ New, Q:Old $\overset{\text{No}}{\underset{\text{Yes}}{\leftrightarrow}}$ New, R:Old $\overset{\text{Yes}}{\underset{\text{Yes}}{\leftrightarrow}}$ New, S:Old $\overset{\text{No}}{\underset{\text{No}}{\leftrightarrow}}$ New, W:Add, Z:Discontinued, F:Interchangeable by set, K:Q'ty Change

Copyright (C) YANMAR CO., LTD. All RightsReserved.

Fig.55. COUPLING

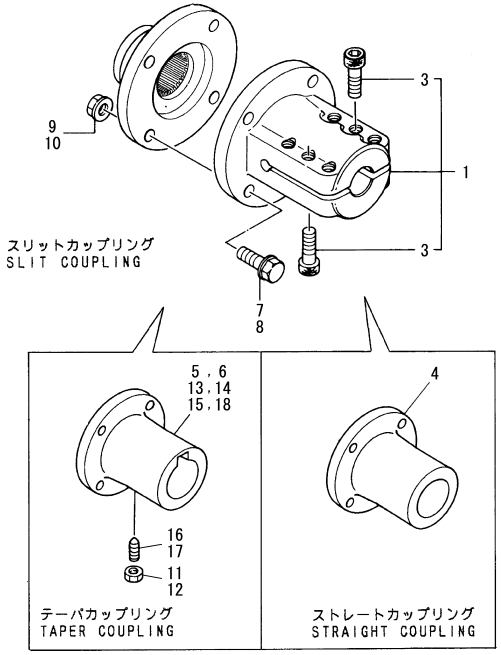

(A)=4JH2E
(B)=4JH2-TE
(C)=4JH2-HTE
(D)=4JH2-DTE
(E)=4JH2-UTE(B)
(F)=

No.	Lev.	Parts No.	Description	Q'ty (A)	(B)	(C)	(D)	(E)	(F)	I	R
1	1	129470-83750	COUPLING ASSY	1	1	1	1	1			
3	2	26450-120402	BOLT, M12X 40	6	6	6	6	6			
4	1	129470-85900	COUPLING	1	1	1	1	1			
5	1	129473-85900	COUPLING, TAPER 38			1	1	1			1
6	1	129473-85910	COUPLING, TAPER 40				1	1			2
7	1	26106-100322	BOLT, M10X 32 PLATED			4	4	4			
8	1	26106-100322	BOLT, M10X 32 PLATED	4	4	4	4	4			
9	1	26706-100002	NUT, M10			4	4	4			
10	1	26706-100002	NUT, M10	4	4	4	4	4			
11	1	26756-080002	NUT, LOCK M8			1	1	1			
12	1	26756-080002	NUT, LOCK M8	1	1	1	1	1			
13	1	48110-028070	COUPLING, 28	1	1						3
14	1	48110-030061	COUPLING, D29.5	1		1					4
15	1	48110-032065	COUPLING, TAPER 32	1	1		1	1			5
16	1	48110-032411	SCREW			1	1	1			
17	1	48110-032411	SCREW	1	1	1	1	1			
18	1	48110-034071	COUPLING 34	1	1	1	1				6

Remarks
(1)4JH2GG-HTBE, 4JH2G-DTBE, 4JH2S-UTBE.
(2)4JH2GG-DTBE, 4JH2GG-UTBE.
(3)4JH2SSBE.
(4)4JH2SBE, 4JH2SE, 4JH2GE, 4JH2GGE,4JH2SPE, 4JH2GPE, 4JH2ME, 4JH2SS-HTBE.
(5)4JH2GBE, 4JH2SS-DTBE, 4JH2SS-UTBE.
(6)4JH2GGBE, 4JH2S-HTBE, 4JH2G-HTBE, 4JH2GG-HTBE, 4JH2S-HTE, 4JH2G-HTE, 4JH2M-HTE, 4JH2S-DTBE, 4JH2S-DTE, 4JH2M-DTE.

N:Old $\xleftrightarrow[\text{No}]{\text{Yes}}$ New, Q:Old $\xleftrightarrow[\text{Yes}]{\text{No}}$ New, R:Old $\xleftrightarrow[\text{Yes}]{\text{Yes}}$ New, S:Old $\xleftrightarrow[\text{No}]{\text{No}}$ New, W:Add, Z:Discontinued, F:Interchangeable by set, K:Q'ty Change

Copyright (C) YANMAR CO., LTD. All RightsReserved.

Fig.56. SINGLE LEVER CONTROL

Fig. 56 シングルレバーコントロール SINGLE LEVER CONTROL

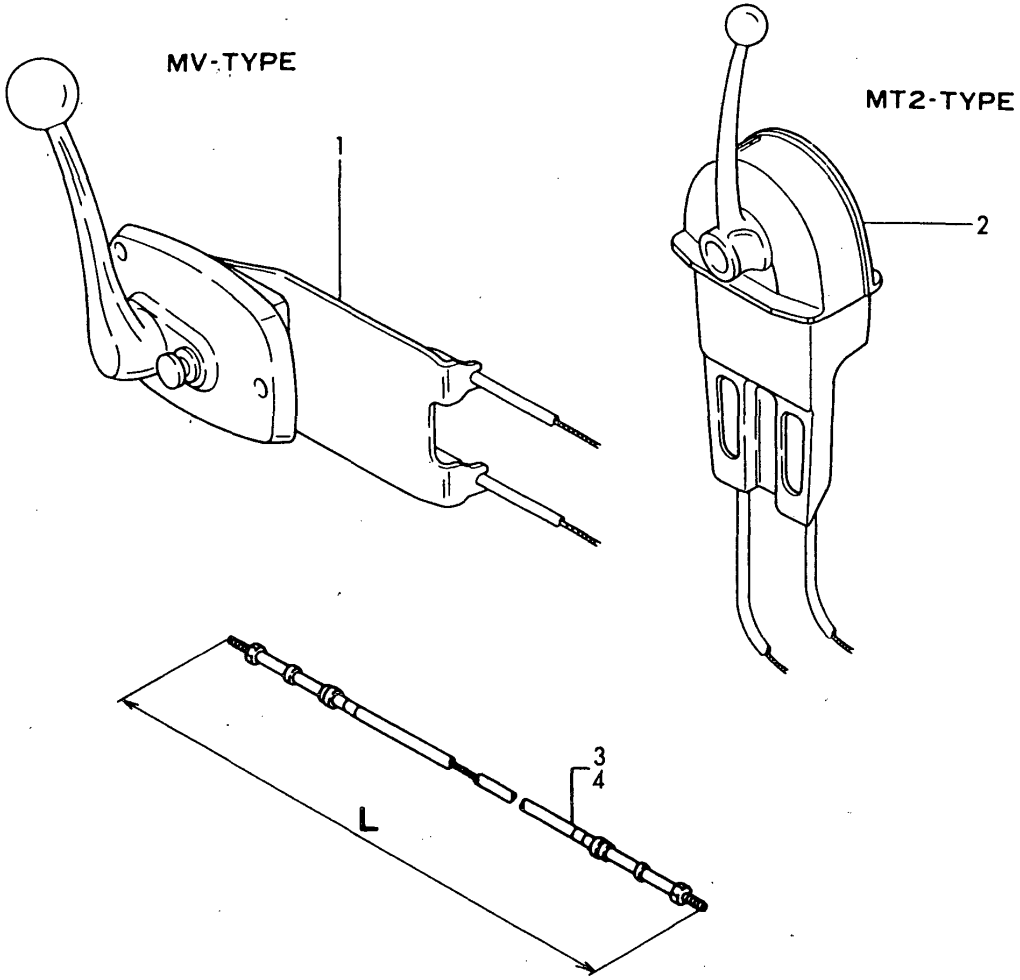

(A)=4JH2E (D)=4JH2-DTE
(B)=4JH2-TE (E)=4JH2-UTE(B)
(C)=4JH2-HTE (F)=

No.	Lev.	Parts No.	Description	Q'ty (A)	(B)	(C)	(D)	(E)	(F)	I	R
1	1	128170-86500	CONTROLLER	1	1	1	1	1			
2	1	41730-000680	HEAD, REMOTE-CONTROL	1	1	1	1	1			
3	1	129470-86500	CABLE, L=7000	2	2	2	2	2			
4	1	41710-000380	CABLE L=4000	2	2	2	2	2			

N:Old $\xleftrightarrow[\text{No}]{\text{Yes}}$ New, Q:Old $\xleftrightarrow[\text{Yes}]{\text{No}}$ New, R:Old $\xleftrightarrow[\text{Yes}]{\text{Yes}}$ New, S:Old $\xleftrightarrow[\text{No}]{\text{No}}$ New, W:Add, Z:Discontinued, F:Interchangeable by set, K:Q'ty Change

Copyright (C) YANMAR CO., LTD. All RightsReserved.

Fig.57. INSTRUMENT PANEL(B-2 TYPE)

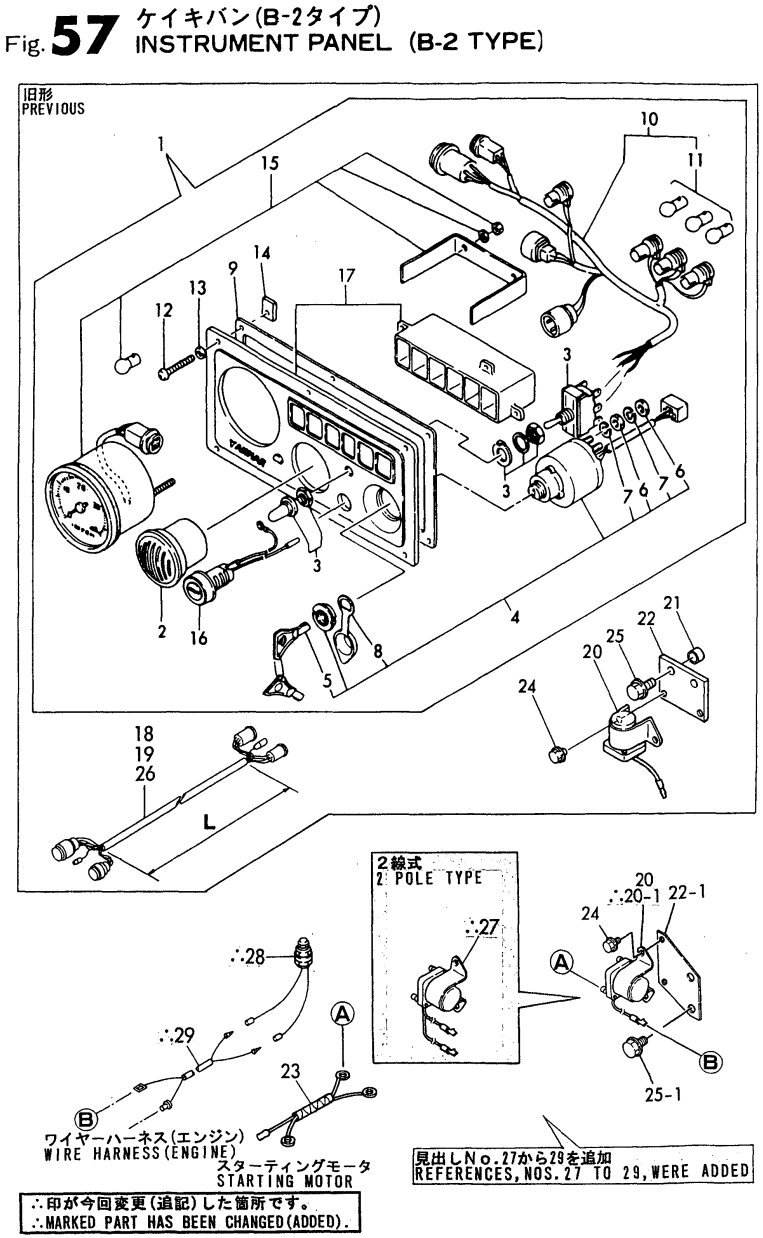

Remarks
(1) THE NEW PANEL TYPE IS 129574
-91130 SHOWN IN FIG 57A.
(2) OPTIONAL : 2POLE TYPE.

(A)=4JH2E (D)=4JH2-DTE
(B)=4JH2-TE (E)=4JH2-UTE(B)
(C)=4JH2-HTE (F)=

No.	Lev.	Parts No.	Description	Q'ty (A)	(B)	(C)	(D)	(E)	(F)	I	R
1	1	124411-91190	PANEL ASSY	1	1	1	1	1		Z	1
	(A=E07099)	(B=E14311)	(C=E23261) (D=E34536)	(E=E40733)							
2	2	104271-91351	BUZZER	1	1	1	1	1		Z	1
	(A=E07099)	(B=E14311)	(C=E23261) (D=E34536)	(E=E40733)							
3	2	128170-91310	SWITCH	1	1	1	1	1		Z	1
	(A=E07099)	(B=E14311)	(C=E23261) (D=E34536)	(E=E40733)							
4	2	127412-91250	SWITCH, KEY	1	1	1	1	1		Z	1
	(A=E07099)	(B=E14311)	(C=E23261) (D=E34536)	(E=E40733)							
5	3	123482-91291	KEY	1	1	1	1	1		Z	1
	(A=E07099)	(B=E14311)	(C=E23261) (D=E34536)	(E=E40733)							
6	3	26716-050002	NUT, M5	10	10	10	10	10		Z	1
	(A=E07099)	(B=E14311)	(C=E23261) (D=E34536)	(E=E40733)							
7	3	22217-050000	WASHER, SPRING 5	10	10	10	10	10		Z	1
	(A=E07099)	(B=E14311)	(C=E23261) (D=E34536)	(E=E40733)							
8	3	127620-91820	COVER	1	1	1	1	1		Z	1
	(A=E07099)	(B=E14311)	(C=E23261) (D=E34536)	(E=E40733)							
9	2	128170-91020	GASKET	1	1	1	1	1		Z	1
	(A=E07099)	(B=E14311)	(C=E23261) (D=E34536)	(E=E40733)							
10	2	128170-91031	HARNESS, WIRE	1	1	1	1	1		Z	1
	(A=E07099)	(B=E14311)	(C=E23261) (D=E34536)	(E=E40733)							
11	3	194151-55820	BULB, 12V3.4W	3	3	3	3	3		Z	1
	(A=E07099)	(B=E14311)	(C=E23261) (D=E34536)	(E=E40733)							
12	2	128170-91810	SCREW, M5X35	6	6	6	6	6		Z	1
	(A=E07099)	(B=E14311)	(C=E23261) (D=E34536)	(E=E40733)							
13	2	128170-91820	WASHER, 5	6	6	6	6	6		Z	1
	(A=E07099)	(B=E14311)	(C=E23261) (D=E34536)	(E=E40733)							
14	2	128170-91830	NUT, M5	6	6	6	6	6		Z	1
	(A=E07099)	(B=E14311)	(C=E23261) (D=E34536)	(E=E40733)							
15	2	128696-91100	TACHOMETER	1	1	1	1	1		Z	1
	(A=E07099)	(B=E14311)	(C=E23261) (D=E34536)	(E=E40733)							
16	2	129470-91190	SWITCH, STOP	1	1	1	1	1		Z	1
	(A=E07099)	(B=E14311)	(C=E23261) (D=E34536)	(E=E40733)							
17	2	124411-91010	BODY, PANEL	1	1	1	1	1		Z	1
	(A=E07099)	(B=E14311)	(C=E23261) (D=E34536)	(E=E40733)							
18	1	129772-77500	HARNESS, WIRE 3.8M	1	1	1	1			Z	1
	(A=E07099)	(B=E14311)	(C=E23261) (D=E34536)								
19	1	129470-77530	HARNESS, WIRE 5.8M	1	1	1	1			Z	1
	(A=E07099)	(B=E14311)	(C=E23261) (D=E34536)								
20	1	129100-77910	RELAY, MAGNETIC	1	1	1	1	1		W	
	(A=*1988.08)	(B=*1988.08)	(C=*1988.08) (D=E31796)	(E=*1988.08)							
20-1	1	129490-77910	RELAY, STARTER	1	1	1	1	1		S	
	(A=E07940)	(B=E14619)	(C=E23484) (D=E34965)	(E=E40923)							
21	1	129301-34830	SPACER	2	2	2	2	2		W	
	(A=*1988.08)	(B=*1988.08)	(C=*1988.08) (D=E31796)	(E=*1988.08)							
21-1	1	129301-34830	SPACER	2	2	2	2	2		Z	
	(A=*1989.04)	(B=*1989.04)	(C=*1989.04) (D=*1989.04)	(E=*1989.04)							
22	1	129573-77950	BRACKET	1	1	1	1	1		W	
	(A=*1988.08)	(B=*1988.08)	(C=*1988.08) (D=E31796)	(E=*1988.08)							
22-1	1	129573-77951	BRACKET	1	1	1	1	1		N	
	(A=*1989.04)	(B=*1989.04)	(C=*1989.04) (D=*1989.04)	(E=*1989.04)							
23	1	129573-77960	HARNESS, WIRE	1	1	1	1	1		W	

N:Old $\overset{\text{Yes}}{\underset{\text{No}}{\leftrightarrow}}$ New, Q:Old $\overset{\text{No}}{\underset{\text{Yes}}{\leftrightarrow}}$ New, R:Old $\overset{\text{Yes}}{\underset{\text{Yes}}{\leftrightarrow}}$ New, S:Old $\overset{\text{No}}{\underset{\text{No}}{\leftrightarrow}}$ New, W:Add, Z:Discontinued, F:Interchangeable by set, K:Q'ty Change

++ CONTINUE ++

Copyright (C) YANMAR CO., LTD. All RightsReserved.

Fig.57. INSTRUMENT PANEL(B-2 TYPE)

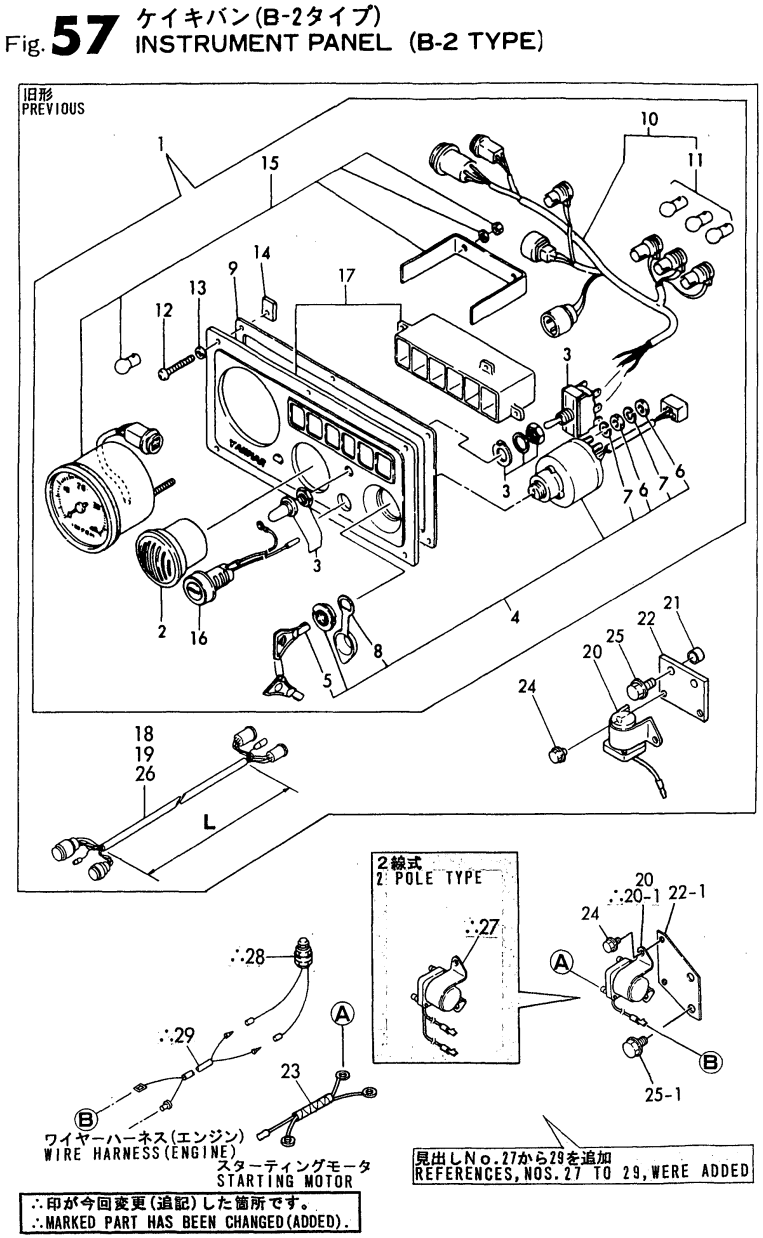

Remarks
(1) THE NEW PANEL TYPE IS 129574
-91130 SHOWN IN FIG 57A.
(2) OPTIONAL : 2POLE TYPE.

(A)=4JH2E (D)=4JH2-DTE
(B)=4JH2-TE (E)=4JH2-UTE(B)
(C)=4JH2-HTE (F)=

No.	Lev.	Parts No.	Description	Q'ty (A)	(B)	(C)	(D)	(E)	(F)	I	R
	(A=*1988.08)	(B=*1988.08)	(C=*1988.08)	(D=E31796)	(E=*1988.08)						
24	1	26106-060102	BOLT, M6X 10 PLATED	2	2	2	2	2		W	
	(A=*1988.08)	(B=*1988.08)	(C=*1988.08)	(D=E31796)	(E=*1988.08)						
25	1	26106-100252	BOLT, M10X 25 PLATED	2	2	2	2	2		W	
	(A=*1988.08)	(B=*1988.08)	(C=*1988.08)	(D=E31796)	(E=*1988.08)						
25-1	1	26106-100162	BOLT, M10X 16 PLATED	2	2	2	2	2		N	
	(A=*1989.04)	(B=*1989.04)	(C=*1989.04)	(D=*1989.04)	(E=*1989.04)						
26	1	129470-77530	HARNESS, WIRE 5.8M	1	1	1	1			W	
	(A=*1989.04)	(B=*1989.04)	(C=*1989.04)	(D=*1989.04)							
26-1	1	129470-77530	HARNESS, WIRE 5.8M	1	1	1	1			Z	1
	(A=E07099)	(B=E14311)	(C=E23261)	(D=E34536)	(E=E40733)						
27	1	129570-77920	RELAY, STARTER	1	1	1	1	1		W	2
	(A=E07940)	(B=E14619)	(C=E23484)	(D=E34965)	(E=E40923)						
28	1	120270-77101	SWITCH, SAFETY	1	1	1	1	1		W	
	(A=E07940)	(B=E14619)	(C=E23484)	(D=E34965)	(E=E40923)						
29	1	129570-77960	HARNESS, WIRE	1	1	1	1	1		W	
	(A=E07940)	(B=E14619)	(C=E23484)	(D=E34965)	(E=E40923)						

N:Old ←Yes/No→ New, Q:Old ←No/Yes→ New, R:Old ←Yes/Yes→ New, S:Old ←No/No→ New, W:Add, Z:Discontinued, F:Interchangeable by set, K:Q'ty Change

Copyright (C) YANMAR CO., LTD. All RightsReserved.

Fig.93. (57A)INSTRUMENT PANEL(B-TYPE,NEW)

Fig. 57A パネルB（シンガタ）
PANEL B (NEW)

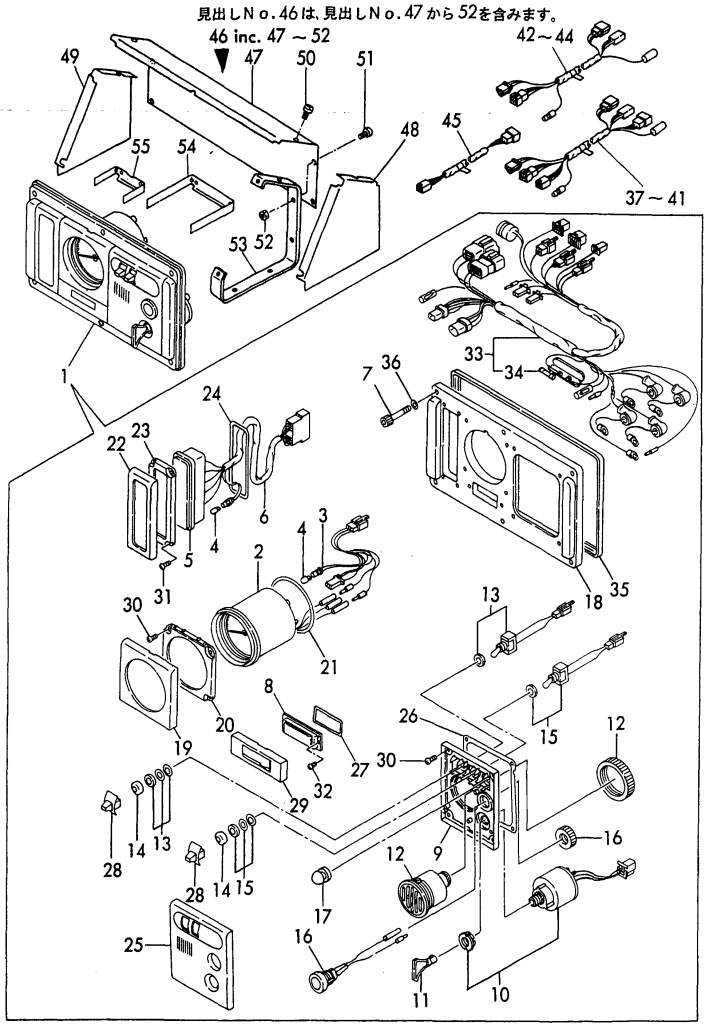

Remarks
(1) FOR GM,HM SERIES.
(2) USE IT WHEN MOUNTING THE NEW TYPE PANEL ON THE (OLD TYPE) WIRE HARNESS FOR ENGINE.
(3) USE IT WHEN MOUNTING THE OLD TYPE PANEL ON THE (NEW TYPE) WIRE HARNESS FOR ENGINE.
(4) NOT NEEDED WHEN MOUNTING ON THE SIDE.

(A)=4JH2E (D)=4JH2-DTE
(B)=4JH2-TE (E)=4JH2-UTE(B)
(C)=4JH2-HTE (F)=

No.	Lev.	Parts No.	Description	Q'ty (A)	(B)	(C)	(D)	(E)	(F)	I	R
1	1	129574-91130	PANEL, INSTRUMENT	1	1	1	1	1		W	
	(A=E07099)	(B=E14619)	(C=E23484) (D=E34965)	(E=E40923)							
2	2	129574-91200	METER KIT	1	1	1	1	1			
3	2	129574-91870	HARNESS, WIRE	1	1	1	1	1			
4	2	124617-91980	BULB, 12V-1.7W	5	5	5	5	5			
5	2	128391-91260	BOX	1	1	1	1	1			
6	2	128391-91860	WIRE	1	1	1	1	1			
7	2	127687-91870	BOLT, M6X35	6	6	6	6	6			
8	2	129170-91650	COVER	1	1	1	1	1			
9	2	129574-91410	BRACKET, SWITCH	1	1	1	1	1			
10	2	121575-91250	SWITCH, KEY	1	1	1	1	1			
11	2	123482-91291	KEY	1	1	1	1	1			
12	2	104271-91352	BUZZER	1	1	1	1	1			
13	2	129170-91800	SWITCH	1	1	1	1	1			
14	2	129574-91780	CAP, RUBBER	2	2	2	2	2			
15	2	129574-91790	SWITCH	1	1	1	1	1			
16	2	129470-91190	SWITCH, STOP	1	1	1	1	1			
17	2	129170-91810	COVER	1	1	1	1	1			
18	2	128391-91930	PANEL	1	1	1	1	1			
19	2	129574-91620	BEZEL	1	1	1	1	1			
20	2	129574-91420	BRACKET	1	1	1	1	1			
21	2	129574-91720	GASKET	1	1	1	1	1			
22	2	128391-91640	BEZEL	1	1	1	1	1			
23	2	128391-91440	PLATE	1	1	1	1	1			
24	2	128391-91740	GASKET	1	1	1	1	1			
25	2	129170-91610	BEZEL	1	1	1	1	1			
26	2	129574-91710	GASKET	1	1	1	1	1			
27	2	129574-91750	GASKET	1	1	1	1	1			
28	2	129574-91770	KNOB	2	2	2	2	2			
29	2	129574-91650	BEZEL	1	1	1	1	1			
30	2	127692-91410	SCREW	8	8	8	8	8			
31	2	127692-91440	SCREW	4	4	4	4	4			
32	2	127692-91450	SCREW	2	2	2	2	2			
33	2	129570-91850	HARNESS, WIRE	1	1	1	1	1			
34	3	124617-91990	FUSE	1	1	1	1	1			
35	2	128391-91700	GASKET	1	1	1	1	1			
36	2	127687-91880	WASHER	6	6	6	6	6			
37	1	129574-77700	HARNESS, WIRE 3M	1	1	1	1	1			
38	1	129574-77710	HARNESS, WIRE 4M	1	1	1	1	1			
39	1	129574-77720	HARNESS, WIRE 6M	1	1	1	1	1			
40	1	128391-77710	HARNESS, WIRE	1	1	1	1	1			1
41	1	128391-77700	HARNESS, WIRE	1	1	1	1	1			1
42	1	129574-77850	HARNESS, WIRE	1	1	1	1	1			2
43	1	129574-77860	HARNESS, WIRE	1	1	1	1	1			3
44	1	127692-91700	HARNESS, WIRE	1	1	1	1	1			
45	1	127692-91710	HARNESS, WIRE	1	1	1	1	1			
46	1	129574-91900	COVER ASSY	1	1	1	1	1			
47	2	129574-91950	COVER, PANEL	1	1	1	1	1			
48	2	129574-91960	COVER, PANEL	1	1	1	1	1			
49	2	129574-91970	COVER, PANEL	1	1	1	1	1			
50	2	26559-060122	SCREW, M6X12	2	2	2	2	2			

N:Old $\xleftarrow[\text{No}]{\text{Yes}}$ New, Q:Old $\xleftarrow[\text{Yes}]{\text{No}}$ New, R:Old $\xleftarrow[\text{Yes}]{\text{Yes}}$ New, S:Old $\xleftarrow[\text{No}]{\text{No}}$ New, W:Add, Z:Discontinued, F:Interchangeable by set, K:Q'ty Change

++ CONTINUE ++

Copyright (C) YANMAR CO., LTD. All RightsReserved.

Fig.93. (57A)INSTRUMENT PANEL(B-TYPE,NEW)

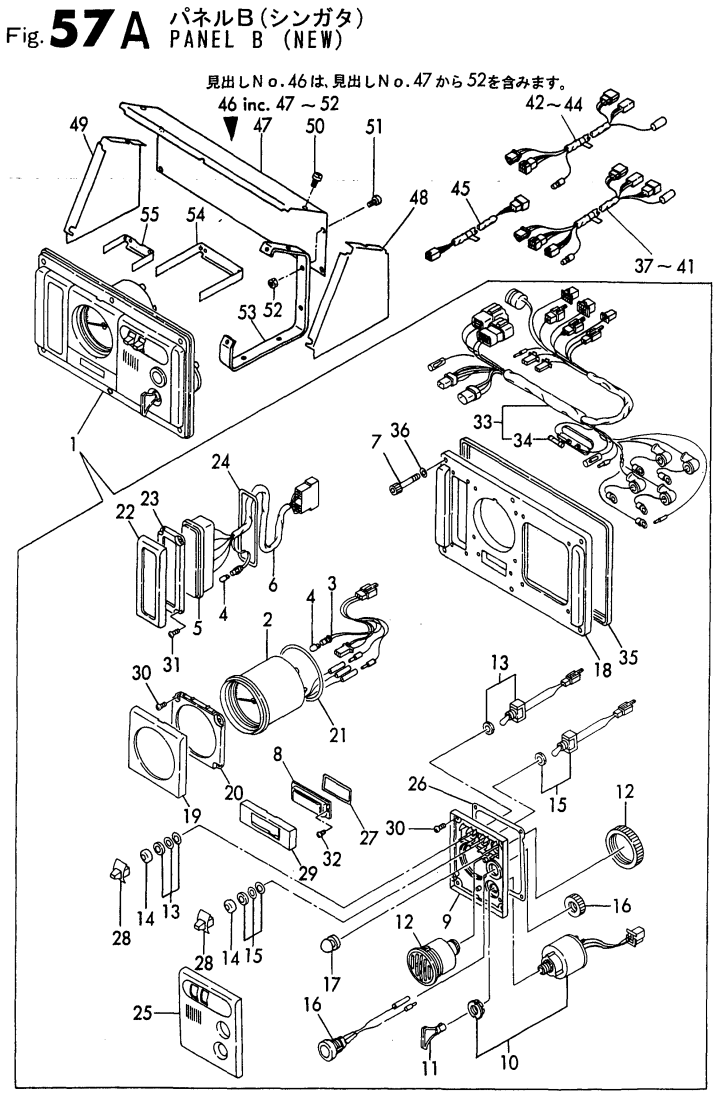

Remarks
(1) FOR GM,HM SERIES.
(2) USE IT WHEN MOUNTING THE NEW TYPE PANEL ON THE (OLD TYPE) WIRE HARNESS FOR ENGINE.
(3) USE IT WHEN MOUNTING THE OLD TYPE PANEL ON THE (NEW TYPE) WIRE HARNESS FOR ENGINE.
(4) NOT NEEDED WHEN MOUNTING ON THE SIDE.

(A)=4JH2E
(B)=4JH2-TE
(C)=4JH2-HTE
(D)=4JH2-DTE
(E)=4JH2-UTE(B)
(F)=

No.	Lev.	Parts No.	Description	Q'ty (A)	(B)	(C)	(D)	(E)	(F)	I	R
51	2	26556-060122	SCREW M 6X12	4	4	4	4	4			4
52	2	26716-060002	NUT, M6	4	4	4	4	4			4
53	1	129574-91530	BRACKET, PANEL	2	2	2	2	2			
54	1	129574-91540	BRACKET	1	1	1	1	1			
55	1	129574-91550	BRACKET	1	1	1	1	1			

N:Old ←Yes/No→ New, Q:Old ←No/Yes→ New, R:Old ←Yes/Yes→ New, S:Old ←No/No→ New, W:Add, Z:Discontinued, F:Interchangeable by set, K:Q'ty Change

Copyright (C) YANMAR CO., LTD. All RightsReserved.

Fig.58. INSTRUMENT PANEL(C-TYPE)

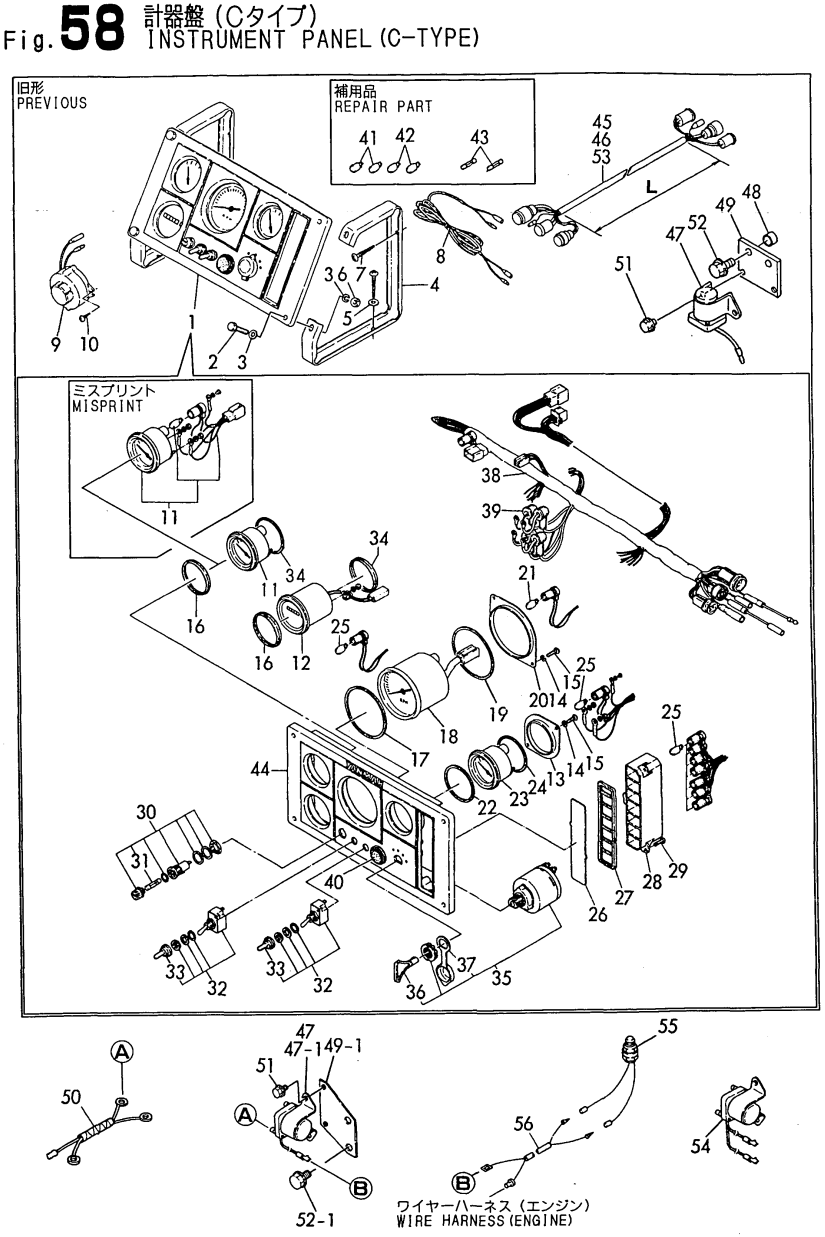

Remarks
(1) THE NEW PANEL TYPE IS 129574
-91160 SHOWN IN FIG 58A.
(2) 2POLE TYPE.

(A)=4JH2E (D)=4JH2-DTE
(B)=4JH2-TE (E)=4JH2-UTE(B)
(C)=4JH2-HTE (F)=

No.	Lev.	Parts No.	Description	Q'ty (A)	(B)	(C)	(D)	(E)	(F)	I	R
1	1	129470-91100	PANEL ASSY	1	1	1	1	1		Z	1
	(A=E07099)	(B=E14311)	(C=E23261) (D=E34536) (E=E40733)								
2	2	127620-91500	SCREW	4	4	4	4	4		Z	1
	(A=E07099)	(B=E14311)	(C=E23261) (D=E34536) (E=E40733)								
3	2	127620-91510	WASHER	8	8	8	8	8		Z	1
	(A=E07099)	(B=E14311)	(C=E23261) (D=E34536) (E=E40733)								
4	2	127410-91680	BRACKET, PANEL	2	2	2	2	2		Z	1
	(A=E07099)	(B=E14311)	(C=E23261) (D=E34536) (E=E40733)								
5	2	127620-91560	WASHER	4	4	4	4	4		Z	1
	(A=E07099)	(B=E14311)	(C=E23261) (D=E34536) (E=E40733)								
6	2	127620-91550	NUT	4	4	4	4	4		Z	1
	(A=E07099)	(B=E14311)	(C=E23261) (D=E34536) (E=E40733)								
7	2	127620-91570	SCREW	4	4	4	4	4		Z	1
	(A=E07099)	(B=E14311)	(C=E23261) (D=E34536) (E=E40733)								
8	2	127620-91580	HARNESS, WIRE	1	1	1	1	1		Z	1
	(A=E07099)	(B=E14311)	(C=E23261) (D=E34536) (E=E40733)								
9	2	124617-91900	BUZZER	1	1	1	1	1		Z	1
	(A=E07099)	(B=E14311)	(C=E23261) (D=E34536) (E=E40733)								
10	2	22717-410160	SCREW, 4.1X16	2	2	2	2	2		Z	1
	(A=E07099)	(B=E14311)	(C=E23261) (D=E34536) (E=E40733)								
11	2	129470-91160	GAUGE	1	1	1	1	1		Z	1
	(A=E07099)	(B=E14311)	(C=E23261) (D=E34536) (E=E40733)								
12	2	157854-04300	HOUR METER	1	1	1	1	1		Z	1
	(A=E07099)	(B=E14311)	(C=E23261) (D=E34536) (E=E40733)								
13	2	127410-91510	BRACKET	3	3	3	3	3		Z	1
	(A=E07099)	(B=E14311)	(C=E23261) (D=E34536) (E=E40733)								
14	2	127410-91520	WASHER	8	8	8	8	8		Z	1
	(A=E07099)	(B=E14311)	(C=E23261) (D=E34536) (E=E40733)								
15	2	127410-91530	SCREW	8	8	8	8	8		Z	1
	(A=E07099)	(B=E14311)	(C=E23261) (D=E34536) (E=E40733)								
16	2	127410-91580	GASKET	2	2	2	2	2		Z	1
	(A=E07099)	(B=E14311)	(C=E23261) (D=E34536) (E=E40733)								
17	2	127410-91550	GASKET	1	1	1	1	1		Z	1
	(A=E07099)	(B=E14311)	(C=E23261) (D=E34536) (E=E40733)								
18	2	129470-91170	TACHOMETER	1	1	1	1	1		Z	1
	(A=E07099)	(B=E14311)	(C=E23261) (D=E34536) (E=E40733)								
19	2	127410-91560	GASKET	1	1	1	1	1		Z	1
	(A=E07099)	(B=E14311)	(C=E23261) (D=E34536) (E=E40733)								
20	2	127410-91570	BRACKET	1	1	1	1	1		Z	1
	(A=E07099)	(B=E14311)	(C=E23261) (D=E34536) (E=E40733)								
21	2	124617-91920	BULB, 12V-3W	1	1	1	1	1		Z	1
	(A=E07099)	(B=E14311)	(C=E23261) (D=E34536) (E=E40733)								
22	2	127410-91580	GASKET	1	1	1	1	1		Z	1
	(A=E07099)	(B=E14311)	(C=E23261) (D=E34536) (E=E40733)								
23	2	124617-91840	THERMOMETER, WATER	1	1	1	1	1		Z	1
	(A=E07099)	(B=E14311)	(C=E23261) (D=E34536) (E=E40733)								
24	2	127410-91590	GASKET	1	1	1	1	1		Z	1
	(A=E07099)	(B=E14311)	(C=E23261) (D=E34536) (E=E40733)								
25	2	124617-91980	BULB, 12V-1.7W	6	6	6	6	6		Z	1
	(A=E07099)	(B=E14311)	(C=E23261) (D=E34536) (E=E40733)								
26	2	127410-91600	LENS	1	1	1	1	1		Z	1

N:Old $\xleftarrow[\text{No}]{\text{Yes}}$ New, Q:Old $\xleftarrow[\text{Yes}]{\text{No}}$ New, R:Old $\xleftarrow[\text{Yes}]{\text{Yes}}$ New, S:Old $\xleftarrow[\text{No}]{\text{No}}$ New, W:Add, Z:Discontinued, F:Interchangeable by set, K:Q'ty Change

++ CONTINUE ++

Copyright (C) YANMAR CO., LTD. All RightsReserved.

Fig.58. INSTRUMENT PANEL(C-TYPE)

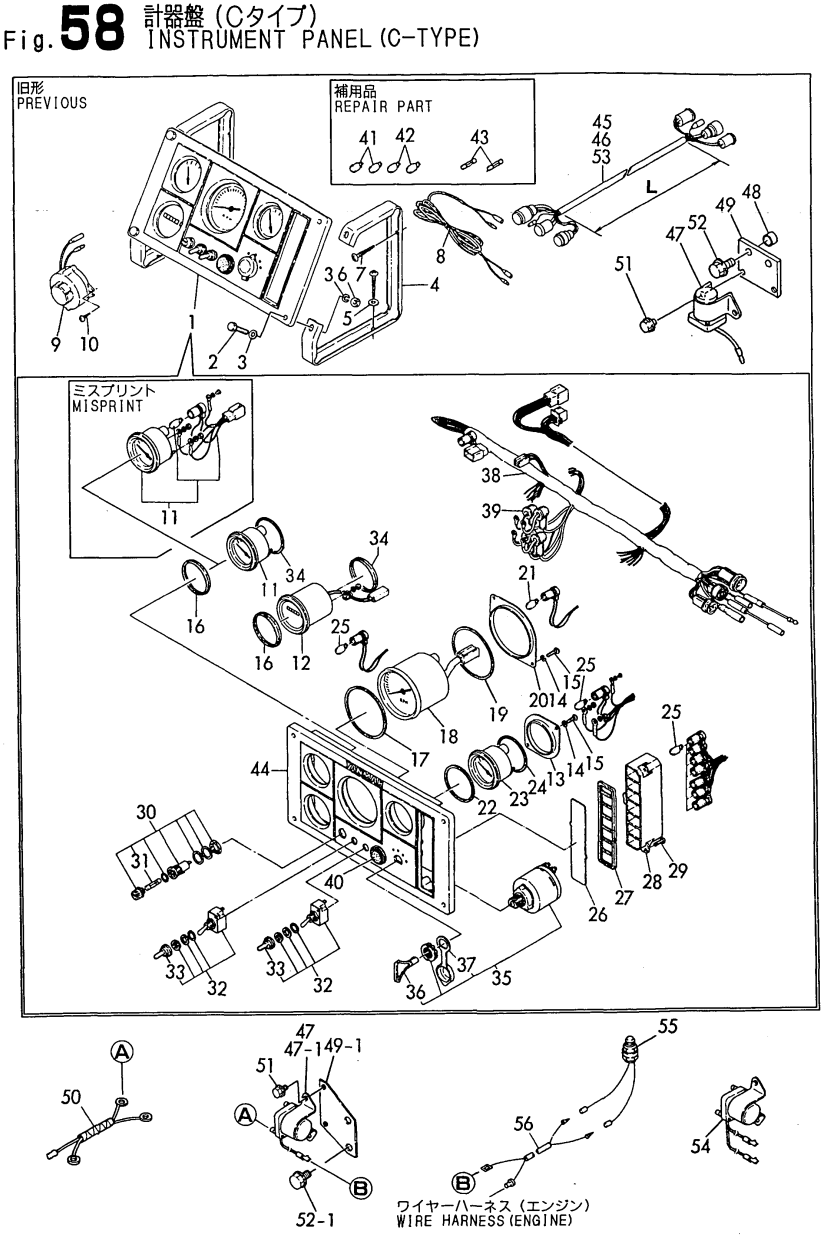

Remarks
(1) THE NEW PANEL TYPE IS 129574
-91160 SHOWN IN FIG 58A.
(2) 2POLE TYPE.

(A)=4JH2E (D)=4JH2-DTE
(B)=4JH2-TE (E)=4JH2-UTE(B)
(C)=4JH2-HTE (F)=

No.	Lev.	Parts No.	Description	Q'ty (A)	(B)	(C)	(D)	(E)	(F)	I	R
		(A=E07099)	(B=E14311) (C=E23261) (D=E34536)	(E=E40733)							
27	2	127410-91610	RETAINER	1	1	1	1	1		Z	1
		(A=E07099)	(B=E14311) (C=E23261) (D=E34536)	(E=E40733)							
28	2	127410-91620	BODY	1	1	1	1	1		Z	1
		(A=E07099)	(B=E14311) (C=E23261) (D=E34536)	(E=E40733)							
29	2	127410-91630	SCREW	3	3	3	3	3		Z	1
		(A=E07099)	(B=E14311) (C=E23261) (D=E34536)	(E=E40733)							
30	2	46150-003610	BOX(WITH OUT FUSE	1	1	1	1	1		Z	1
		(A=E07099)	(B=E14311) (C=E23261) (D=E34536)	(E=E40733)							
31	3	124617-91990	FUSE	3	3	3	3	3		Z	1
		(A=E07099)	(B=E14311) (C=E23261) (D=E34536)	(E=E40733)							
32	2	127620-91790	SWITCH	2	2	2	2	2		Z	1
		(A=E07099)	(B=E14311) (C=E23261) (D=E34536)	(E=E40733)							
33	3	127620-91780	CAP, RUBBER	2	2	2	2	2		Z	1
		(A=E07099)	(B=E14311) (C=E23261) (D=E34536)	(E=E40733)							
34	2	127410-91590	GASKET	2	2	2	2	2		Z	1
		(A=E07099)	(B=E14311) (C=E23261) (D=E34536)	(E=E40733)							
35	2	121575-91250	SWITCH, KEY	1	1	1	1	1		Z	1
		(A=E07099)	(B=E14311) (C=E23261) (D=E34536)	(E=E40733)							
36	3	123482-91291	KEY	2	2	2	2	2		Z	1
		(A=E07099)	(B=E14311) (C=E23261) (D=E34536)	(E=E40733)							
37	3	127620-91820	COVER	1	1	1	1	1		Z	1
		(A=E07099)	(B=E14311) (C=E23261) (D=E34536)	(E=E40733)							
38	2	129470-91150	HARNESS ASSY, WIRE	1	1	1	1	1		Z	1
		(A=E07099)	(B=E14311) (C=E23261) (D=E34536)	(E=E40733)							
39	2	127620-91830	CAP, RUBBER	4	4	4	4	4		Z	1
		(A=E07099)	(B=E14311) (C=E23261) (D=E34536)	(E=E40733)							
40	2	129470-91190	SWITCH, STOP	1	1	1	1	1		Z	1
		(A=E07099)	(B=E14311) (C=E23261) (D=E34536)	(E=E40733)							
41	2	124617-91980	BULB, 12V-1.7W	2	2	2	2	2		Z	1
		(A=E07099)	(B=E14311) (C=E23261) (D=E34536)	(E=E40733)							
42	2	124617-91920	BULB, 12V-3W	2	2	2	2	2		Z	1
		(A=E07099)	(B=E14311) (C=E23261) (D=E34536)	(E=E40733)							
43	2	124617-91990	FUSE	2	2	2	2	2		Z	1
		(A=E07099)	(B=E14311) (C=E23261) (D=E34536)	(E=E40733)							
44	2	129470-91180	BODY, PANEL	1	1	1	1	1		Z	1
		(A=E07099)	(B=E14311) (C=E23261) (D=E34536)	(E=E40733)							
45	1	129470-77540	CORD, EXTENSION 5800	1	1	1	1			Z	1
		(A=E07099)	(B=E14311) (C=E23261) (D=E34536)								
46	1	129470-77500	CORD, EXTENSION 3800	1	1	1	1			Z	1
		(A=E07099)	(B=E14311) (C=E23261) (D=E34536)								
47	1	129100-77910	RELAY, MAGNETIC	1	1	1	1	1		W	
		(A=*1988.08)	(B=*1988.08) (C=*1988.08) (D=E31796)	(E=*1988.08)							
47-1	1	129490-77910	RELAY, STARTER	1	1	1	1	1		S	
		(A=E07940)	(B=E14619) (C=E23484) (D=E34965)	(E=E40923)							
48	1	129301-34830	SPACER	2	2	2	2	2		W	
		(A=*1988.08)	(B=*1988.08) (C=*1988.08) (D=E31796)	(E=*1988.08)							
48-1	1	129301-34830	SPACER	2	2	2	2	2		Z	
		(A=*1989.04)	(B=*1989.04) (C=*1989.04) (D=*1989.04)	(E=*1989.04)							
49	1	129573-77950	BRACKET	1	1	1	1	1		W	
		(A=*1988.08)	(B=*1988.08) (C=*1988.08) (D=E31796)	(E=*1988.08)							

N:Old $\xleftrightarrow[\text{No}]{\text{Yes}}$ New, Q:Old $\xleftrightarrow[\text{Yes}]{\text{No}}$ New, R:Old $\xleftrightarrow[\text{Yes}]{\text{Yes}}$ New, S:Old $\xleftrightarrow[\text{No}]{\text{No}}$ New, W:Add, Z:Discontinued, F:Interchangeable by set, K:Q'ty Change

++ CONTINUE ++

Copyright (C) YANMAR CO., LTD. All RightsReserved.

Fig.58. INSTRUMENT PANEL(C-TYPE)

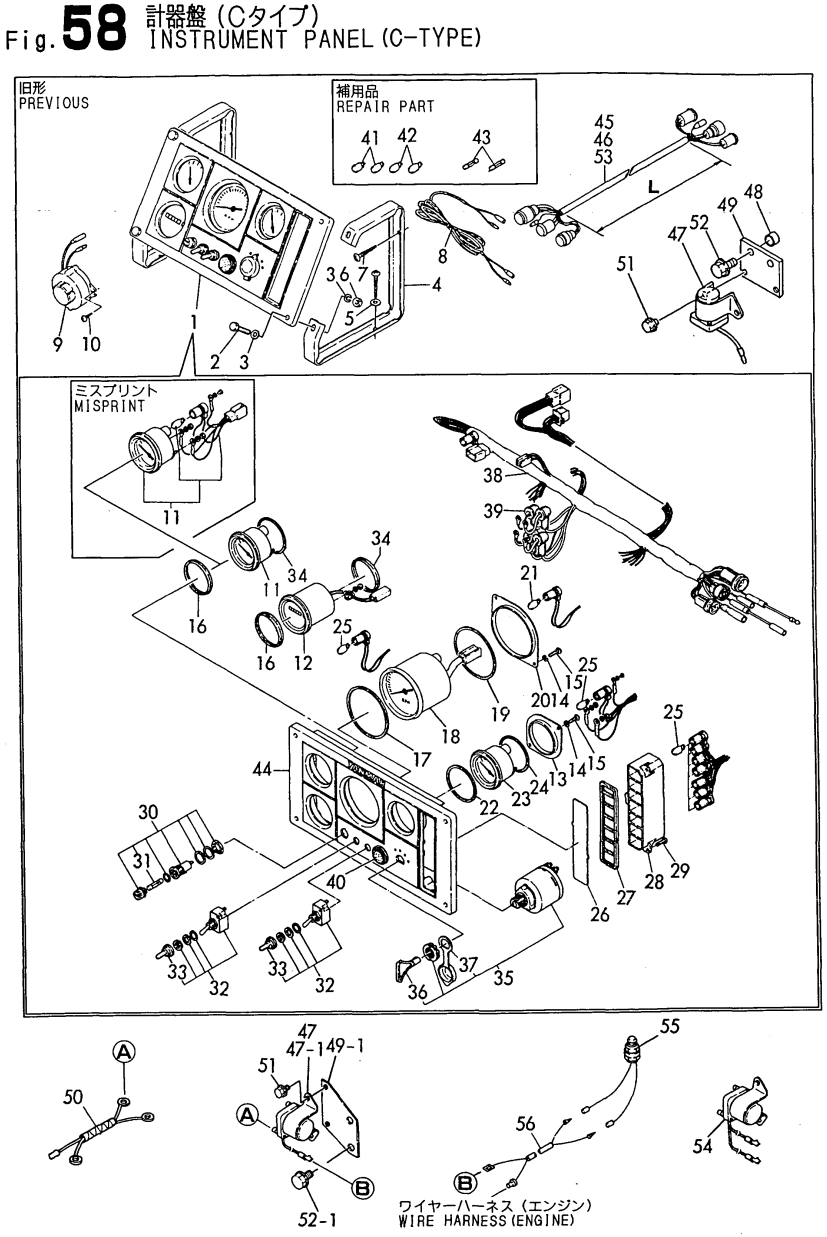

Remarks
(1) THE NEW PANEL TYPE IS 129574
-91160 SHOWN IN FIG 58A.
(2) 2POLE TYPE.

(A)=4JH2E (D)=4JH2-DTE
(B)=4JH2-TE (E)=4JH2-UTE(B)
(C)=4JH2-HTE (F)=

No.	Lev.	Parts No.	Description	Q'ty (A)	(B)	(C)	(D)	(E)	(F)	I	R
49-1	1	129573-77951	BRACKET	1	1	1	1	1		N	
	(A=*1989.04)	(B=*1989.04)	(C=*1989.04) (D=*1989.04)	(E=*1989.04)							
50	1	129573-77960	HARNESS, WIRE	1	1	1	1	1		W	
	(A=*1988.08)	(B=*1988.08)	(C=*1988.08) (D=E31796)	(E=*1988.08)							
51	1	26106-060102	BOLT, M6X 10 PLATED	2	2	2	2	2		W	
	(A=*1988.08)	(B=*1988.08)	(C=*1988.08) (D=E31796)	(E=*1988.08)							
52	1	26106-100252	BOLT, M10X 25 PLATED	2	2	2	2	2		W	
	(A=*1988.08)	(B=*1988.08)	(C=*1988.08) (D=E31796)	(E=*1988.08)							
52-1	1	26106-100162	BOLT, M10X 16 PLATED	2	2	2	2	2		N	
	(A=*1989.04)	(B=*1989.04)	(C=*1989.04) (D=*1989.04)	(E=*1989.04)							
53	1	129470-77530	HARNESS, WIRE 5.8M	1	1	1	1			W	
	(A=*1989.04)	(B=*1989.04)	(C=*1989.04) (D=*1989.04)								
53-1	1	129470-77530	HARNESS, WIRE 5.8M	1	1	1	1			Z	1
	(A=E07099)	(B=E14311)	(C=E23261) (D=E34536)								
54	1	129570-77920	RELAY, STARTER	1	1	1	1	1		W	2
	(A=E07940)	(B=E14619)	(C=E23484) (D=E34965)	(E=E40923)							
55	1	120270-77101	SWITCH, SAFETY	1	1	1	1	1		W	
	(A=E07940)	(B=E14619)	(C=E23484) (D=E34965)	(E=E40923)							
56	1	129570-77960	HARNESS, WIRE	1	1	1	1	1		W	
	(A=E07940)	(B=E14619)	(C=E23484) (D=E34965)	(E=E40923)							

N:Old ←Yes/No→ New, Q:Old ←No/Yes→ New, R:Old ←Yes/Yes→ New, S:Old ←No/No→ New, W:Add, Z:Discontinued, F:Interchangeable by set, K:Q'ty Change

Copyright (C) YANMAR CO., LTD. All RightsReserved.

Fig.94. (58A)INSTRUMENT PANEL(C-TYPE,NEW)

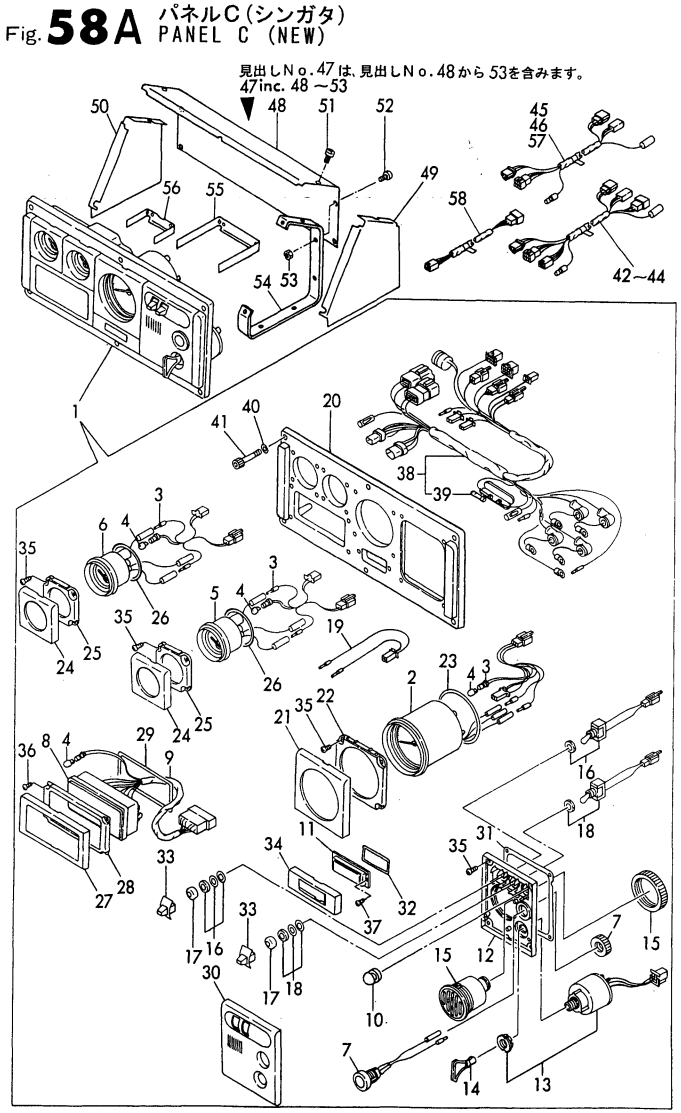

(A)=4JH2E (D)=4JH2-DTE
(B)=4JH2-TE (E)=4JH2-UTE(B)
(C)=4JH2-HTE (F)=

No.	Lev.	Parts No.	Description	Q'ty (A)	(B)	(C)	(D)	(E)	(F)	I	R
1	1	129574-91160	PANEL ASSY, INSTRUM	1	1	1	1	1		W	
	(A=E07099)	(B=E14311)	(C=E23261) (D=E34536)	(E=E40733)							
2	2	129574-91200	METER KIT	1	1	1	1	1			
3	2	129574-91870	HARNESS, WIRE	3	3	3	3	3			
4	2	124617-91980	BULB, 12V-1.7W	8	8	8	8	8			
5	2	129574-91210	METER	1	1	1	1	1			
6	2	129574-91220	METER	1	1	1	1	1			
7	2	129470-91190	SWITCH, STOP	1	1	1	1	1			
8	2	129170-91260	BOX	1	1	1	1	1			
9	2	129170-91860	HARNESS, WIRE	1	1	1	1	1			
10	2	129170-91810	COVER	1	1	1	1	1			
11	2	129170-91650	COVER	1	1	1	1	1			
12	2	129574-91410	BRACKET, SWITCH	1	1	1	1	1			
13	2	121575-91250	SWITCH, KEY	1	1	1	1	1			
14	2	123482-91291	KEY	1	1	1	1	1			
15	2	104271-91352	BUZZER	1	1	1	1	1			
16	2	129170-91800	SWITCH	1	1	1	1	1			
17	2	129574-91780	CAP, RUBBER	2	2	2	2	2			
18	2	129574-91790	SWITCH	1	1	1	1	1			
19	2	129170-91890	HARNESS, WIRE	1	1	1	1	1			
20	2	129170-91930	PANEL	1	1	1	1	1			
21	2	129574-91620	BEZEL	1	1	1	1	1			
22	2	129574-91420	BRACKET	1	1	1	1	1			
23	2	129574-91720	GASKET	1	1	1	1	1			
24	2	129574-91630	BEZEL	2	2	2	2	2			
25	2	129574-91430	BRACKET	2	2	2	2	2			
26	2	129574-91730	GASKET	2	2	2	2	2			
27	2	129574-91640	BEZEL	1	1	1	1	1			
28	2	129574-91440	BRACKET	1	1	1	1	1			
29	2	129574-91740	GASKET	1	1	1	1	1			
30	2	129170-91610	BEZEL	1	1	1	1	1			
31	2	129574-91710	GASKET	1	1	1	1	1			
32	2	129574-91750	GASKET	1	1	1	1	1			
33	2	129574-91770	KNOB	2	2	2	2	2			
34	2	129574-91650	BEZEL	1	1	1	1	1			
35	2	127692-91410	SCREW	16	16	16	16	16			
36	2	127692-91440	SCREW	4	4	4	4	4			
37	2	127692-91450	SCREW	2	2	2	2	2			
38	2	129170-91850	HARNESS, WIRE	1	1	1	1	1			
39	3	124617-91990	FUSE	1	1	1	1	1			
40	2	127687-91880	WASHER	6	6	6	6	6			
41	2	127687-91870	BOLT, M6X35	6	6	6	6	6			
42	1	129574-77700	HARNESS, WIRE 3M	1	1	1	1	1			
43	1	129574-77710	HARNESS, WIRE 4M	1	1	1	1	1			
44	1	129574-77720	HARNESS, WIRE 6M	1	1	1	1	1			
45	1	129574-77850	HARNESS, WIRE	1	1	1	1	1			1
46	1	129574-77860	HARNESS, WIRE	1	1	1	1	1			2
47	1	120324-91900	COVER, PANEL	1	1	1	1	1			
48	2	120324-91950	COVER	1	1	1	1	1			
49	2	129574-91960	COVER, PANEL	1	1	1	1	1			
50	2	129574-91970	COVER, PANEL	1	1	1	1	1			

N:Old $\overset{\text{Yes}}{\underset{\text{No}}{\leftrightarrow}}$ New, Q:Old $\overset{\text{No}}{\underset{\text{Yes}}{\leftrightarrow}}$ New, R:Old $\overset{\text{Yes}}{\underset{\text{Yes}}{\leftrightarrow}}$ New, S:Old $\overset{\text{No}}{\underset{\text{No}}{\leftrightarrow}}$ New, W:Add, Z:Discontinued, F:Interchangeable by set, K:Q'ty Change

Remarks
(1) USE IT WHEN MOUNTING THE NEW TYPE PANEL ON THE (OLD TYPE) WIRE HARNESS FOR ENGINE.
(2) USE IT WHEN MOUNTING THE OLD TYPE PANEL ON THE (NEW TYPE) WIRE HARNESS FOR ENGINE.
(3) NOT NEEDED WHEN MOUNTING ON THE SIDE.

++ CONTINUE ++

Copyright (C) YANMAR CO., LTD. All RightsReserved.

Fig.94. (58A)INSTRUMENT PANEL(C-TYPE,NEW)

Fig. 58A パネルC(シンガタ) PANEL C (NEW)

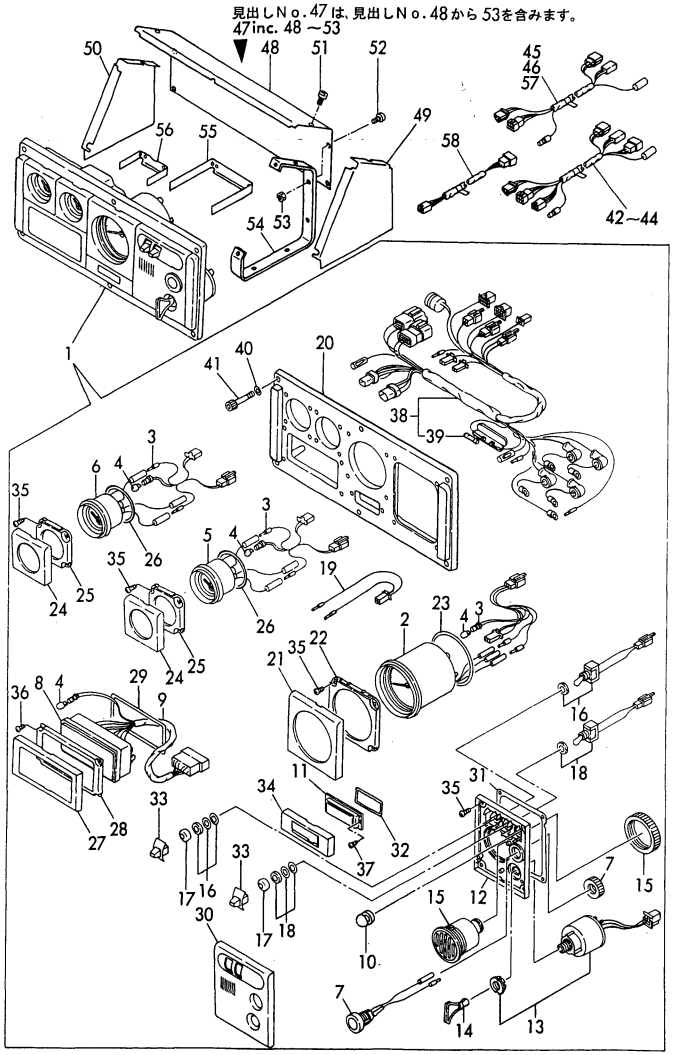

(A)=4JH2E
(B)=4JH2-TE
(C)=4JH2-HTE
(D)=4JH2-DTE
(E)=4JH2-UTE(B)
(F)=

No.	Lev.	Parts No.	Description	Q'ty (A)	(B)	(C)	(D)	(E)	(F)	I	R
51	2	26559-060122	SCREW, M6X12	2	2	2	2	2			
52	2	26556-060122	SCREW M 6X12	4	4	4	4	4			3
53	2	26716-060002	NUT, M6	4	4	4	4	4			3
54	1	129574-91530	BRACKET, PANEL	2	2	2	2	2			
55	1	129574-91540	BRACKET	1	1	1	1	1			
56	1	129574-91550	BRACKET	1	1	1	1	1			
57	1	127692-91700	HARNESS, WIRE	1	1	1	1	1			
58	1	127692-91710	HARNESS, WIRE	1	1	1	1	1			

Remarks
(1) USE IT WHEN MOUNTING THE NEW TYPE PANEL ON THE (OLD TYPE) WIRE HARNESS FOR ENGINE.
(2) USE IT WHEN MOUNTING THE OLD TYPE PANEL ON THE (NEW TYPE) WIRE HARNESS FOR ENGINE.
(3) NOT NEEDED WHEN MOUNTING ON THE SIDE.

N:Old ◄Yes/No► New, Q:Old ◄No/Yes► New, R:Old ◄Yes/Yes► New, S:Old ◄No/No► New, W:Add, Z:Discontinued, F:Interchangeable by set, K:Q'ty Change

Copyright (C) YANMAR CO., LTD. All RightsReserved.

Fig.59. INSTRUMENT PANEL(D-TYPE)

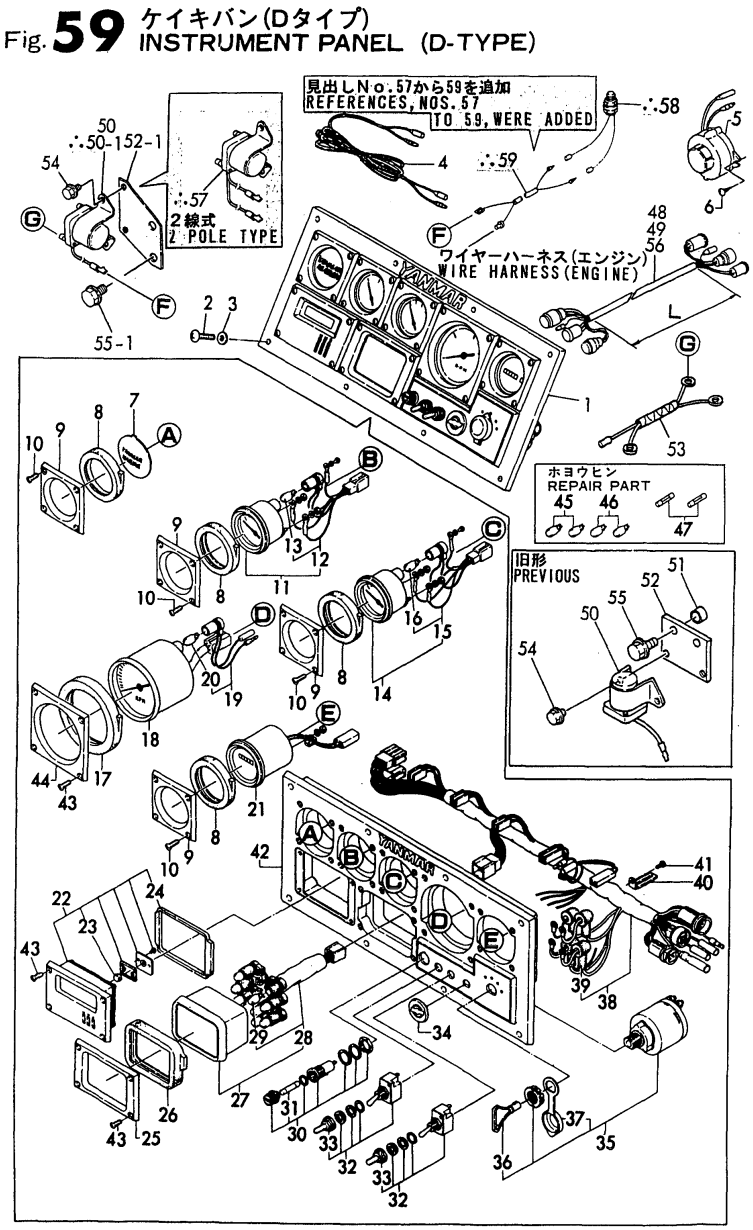

Remarks
(1) THE NEW PANEL TYPE IS 129574
-91190 SHOWN IN FIG 59A.
(2) 2POLE TYPE.

(A)=4JH2E (D)=4JH2-DTE
(B)=4JH2-TE (E)=4JH2-UTE(B)
(C)=4JH2-HTE (F)=

No.	Lev.	Parts No.	Description	Q'ty (A)	(B)	(C)	(D)	(E)	(F)	I	R
1	1	124411-91180	PANEL ASSY	1	1	1	1	1			
1-1	1	124411-91180	PANEL ASSY					1		Z	1
			(E=E40733)								
2	2	127620-91500	SCREW	8	8	8	8	8			
2-1	2	127620-91500	SCREW					8		Z	1
			(E=E40733)								
3	2	127620-91510	WASHER	8	8	8	8	8			
3-1	2	127620-91510	WASHER					8		Z	1
			(E=E40733)								
4	2	127620-91580	HARNESS, WIRE	1	1	1	1	1			
4-1	2	127620-91580	HARNESS, WIRE					1		Z	1
			(E=E40733)								
5	2	124617-91900	BUZZER	1	1	1	1	1			
5-1	2	124617-91900	BUZZER					1		Z	1
			(E=E40733)								
6	2	22717-410160	SCREW, 4.1X16	2	2	2	2	2			
6-1	2	22717-410160	SCREW, 4.1X16					2		Z	1
			(E=E40733)								
7	2	127620-91600	COVER	1	1	1	1	1			
7-1	2	127620-91600	COVER					1		Z	1
			(E=E40733)								
8	2	127620-91610	RUBBER	4	4	4	4	4			
8-1	2	127620-91610	RUBBER					4		Z	1
			(E=E40733)								
9	2	127620-91620	BRACKET	4	4	4	4	4			
9-1	2	127620-91620	BRACKET					4		Z	1
			(E=E40733)								
10	2	127620-91630	SCREW	16	16	16	16	16			
10-1	2	127620-91630	SCREW					16		Z	1
			(E=E40733)								
11	2	124617-91830	GAUGE	1	1	1	1	1			
11-1	2	124617-91830	GAUGE					1		Z	1
			(E=E40733)								
12	3	124617-91910	HARNESS, WIRE	1	1	1	1	1			
12-1	3	124617-91910	HARNESS, WIRE					1		Z	1
			(E=E40733)								
13	4	124617-91920	BULB, 12V-3W	1	1	1	1	1			
13-1	4	124617-91920	BULB, 12V-3W					1		Z	1
			(E=E40733)								
14	2	124617-91840	THERMOMETER, WATER	1	1	1	1	1			
14-1	2	124617-91840	THERMOMETER, WATER					1		Z	1
			(E=E40733)								
15	3	124617-91930	HARNESS, WIRE	1	1	1	1	1			
15-1	3	124617-91930	HARNESS, WIRE					1		Z	1
			(E=E40733)								
16	4	124617-91920	BULB, 12V-3W	1	1	1	1	1			
16-1	4	124617-91920	BULB, 12V-3W					1		Z	1
			(E=E40733)								
17	2	127620-91690	RUBBER	1	1	1	1	1			
17-1	2	127620-91690	RUBBER					1		Z	1
			(E=E40733)								

N:Old $\overset{\text{Yes}}{\underset{\text{No}}{\leftrightarrow}}$ New, Q:Old $\overset{\text{No}}{\underset{\text{Yes}}{\leftrightarrow}}$ New, R:Old $\overset{\text{Yes}}{\underset{\text{Yes}}{\leftrightarrow}}$ New, S:Old $\overset{\text{No}}{\underset{\text{No}}{\leftrightarrow}}$ New, W:Add, Z:Discontinued, F:Interchangeable by set, K:Q'ty Change

++ CONTINUE ++

Copyright (C) YANMAR CO., LTD. All RightsReserved.

Fig.59. INSTRUMENT PANEL(D-TYPE)

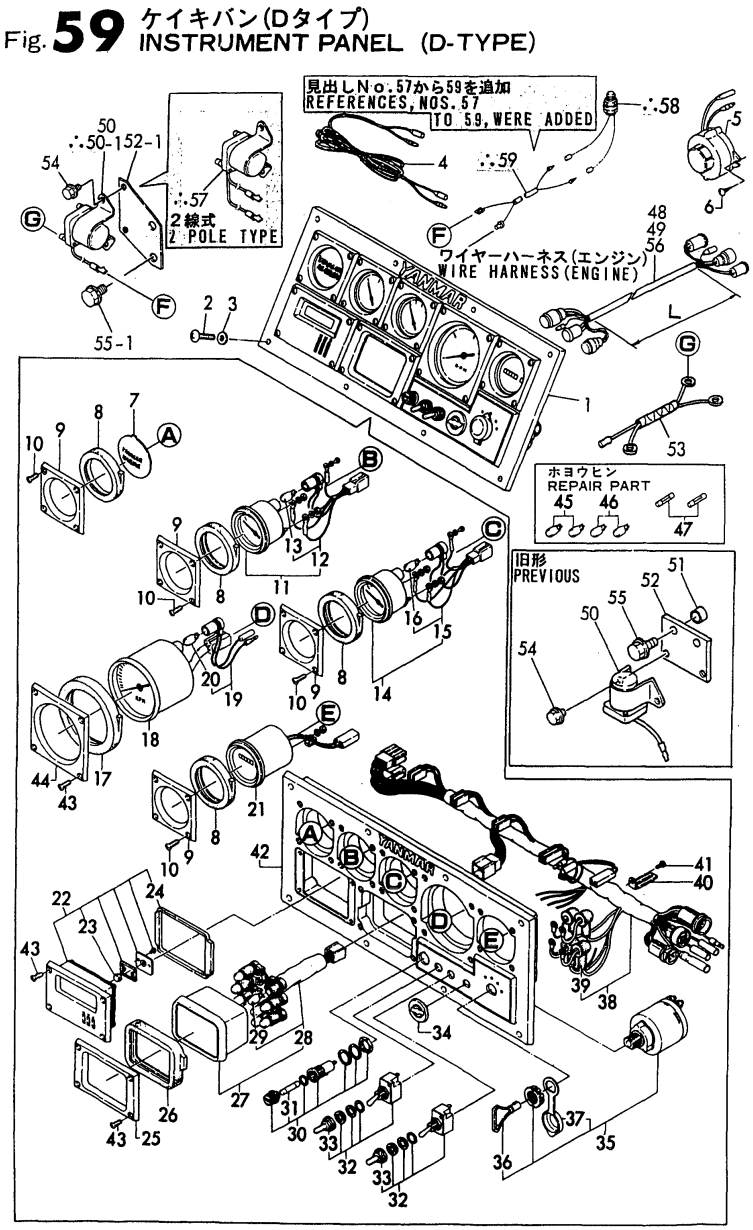

Remarks
(1) THE NEW PANEL TYPE IS 129574
-91190 SHOWN IN FIG 59A.
(2) 2POLE TYPE.

(A)=4JH2E (D)=4JH2-DTE
(B)=4JH2-TE (E)=4JH2-UTE(B)
(C)=4JH2-HTE (F)=

No.	Lev.	Parts No.	Description	Q'ty (A)	(B)	(C)	(D)	(E)	(F)	I	R
18	2	128696-91100	TACHOMETER	1	1	1	1	1			
18-1	2	128696-91100	TACHOMETER					1		Z	1
			(E=E40733)								
19	2	124617-91950	HARNESS, WIRE	1	1	1	1	1			
19-1	2	124617-91950	HARNESS, WIRE					1		Z	1
			(E=E40733)								
20	3	124617-91920	BULB, 12V-3W	1	1	1	1	1			
20-1	3	124617-91920	BULB, 12V-3W					1		Z	1
			(E=E40733)								
21	2	124617-91820	METER, HOUR	1	1	1	1	1			
21-1	2	124617-91820	METER, HOUR					1		Z	1
			(E=E40733)								
22	2	127620-91240	TIMER	1	1	1	1	1			
22-1	2	127620-91240	TIMER					1		Z	1
			(E=E40733)								
23	3	127620-91250	CELL	1	1	1	1	1			
23-1	3	127620-91250	CELL					1		Z	1
			(E=E40733)								
24	3	127620-91720	GASKET	1	1	1	1	1			
24-1	3	127620-91720	GASKET					1		Z	1
			(E=E40733)								
25	2	127620-91730	BRACKET	1	1	1	1	1			
25-1	2	127620-91730	BRACKET					1		Z	1
			(E=E40733)								
26	3	127620-91740	RUBBER	1	1	1	1	1			
26-1	3	127620-91740	RUBBER					1		Z	1
			(E=E40733)								
27	2	124617-91810	BOX ASSY, PILOT	1	1	1	1	1			
27-1	2	124617-91810	BOX ASSY, PILOT					1		Z	1
			(E=E40733)								
28	3	124617-91970	HARNESS, WIRE	1	1	1	1	1			
28-1	3	124617-91970	HARNESS, WIRE					1		Z	1
			(E=E40733)								
29	4	124617-91980	BULB, 12V-1.7W	8	8	8	8	8			
29-1	4	124617-91980	BULB, 12V-1.7W					8		Z	1
			(E=E40733)								
30	2	46150-003610	BOX(WITH OUT FUSE	1	1	1	1	1			
30-1	2	46150-003610	BOX(WITH OUT FUSE					1		Z	1
			(E=E40733)								
31	3	124617-91990	FUSE	1	1	1	1	1			
31-1	3	124617-91990	FUSE					1		Z	1
			(E=E40733)								
32	2	127620-91790	SWITCH	2	2	2	2	2			
32-1	2	127620-91790	SWITCH					2		Z	1
			(E=E40733)								
33	3	127620-91780	CAP, RUBBER	2	2	2	2	2			
33-1	3	127620-91780	CAP, RUBBER					2		Z	1
			(E=E40733)								
34	2	127620-91810	PLUG	1	1	1	1	1			
34-1	2	127620-91810	PLUG					1		Z	1
			(E=E40733)								

N:Old $\overset{\text{Yes}}{\underset{\text{No}}{\leftrightarrow}}$ New, Q:Old $\overset{\text{No}}{\underset{\text{Yes}}{\leftrightarrow}}$ New, R:Old $\overset{\text{Yes}}{\underset{\text{Yes}}{\leftrightarrow}}$ New, S:Old $\overset{\text{No}}{\underset{\text{No}}{\leftrightarrow}}$ New, W:Add, Z:Discontinued, F:Interchangeable by set, K:Q'ty Change

++ CONTINUE ++

Copyright (C) YANMAR CO., LTD. All RightsReserved.

Fig.59. INSTRUMENT PANEL(D-TYPE)

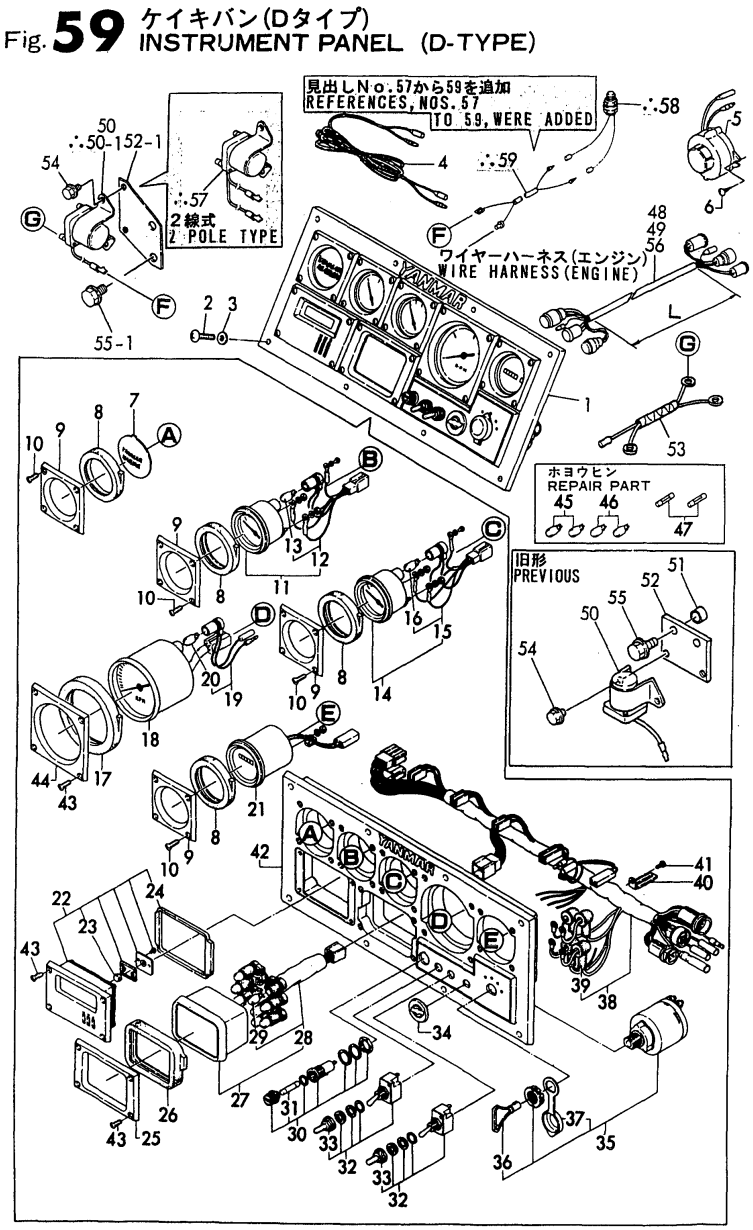

Remarks
(1) THE NEW PANEL TYPE IS 129574
-91190 SHOWN IN FIG 59A.
(2) 2POLE TYPE.

(A)=4JH2E (D)=4JH2-DTE
(B)=4JH2-TE (E)=4JH2-UTE(B)
(C)=4JH2-HTE (F)=

No.	Lev.	Parts No.	Description	Q'ty (A)	(B)	(C)	(D)	(E)	(F)	I	R
35	2	121575-91250	SWITCH, KEY	1	1	1	1	1			
35-1	2	121575-91250	SWITCH, KEY					1		Z	1
			(E=E40733)								
36	3	123482-91291	KEY	2	2	2	2	2			
36-1	3	123482-91291	KEY					2		Z	1
			(E=E40733)								
37	3	127620-91820	COVER	1	1	1	1	1			
37-1	3	127620-91820	COVER					1		Z	1
			(E=E40733)								
38	2	124617-91940	HARNESS, WIRE	1	1	1	1	1			
38-1	2	124617-91940	HARNESS, WIRE					1		Z	1
			(E=E40733)								
39	3	127620-91830	CAP, RUBBER	4	4	4	4	4			
39-1	3	127620-91830	CAP, RUBBER					4		Z	1
			(E=E40733)								
40	2	127620-91860	RETAINER	1	1	1	1	1			
40-1	2	127620-91860	RETAINER					1		Z	1
			(E=E40733)								
41	2	127620-91870	SCREW	1	1	1	1	1			
41-1	2	127620-91870	SCREW					1		Z	1
			(E=E40733)								
42	2	127620-91930	PANEL	1	1	1	1	1			
42-1	2	127620-91930	PANEL					1		Z	1
			(E=E40733)								
43	2	127620-91630	SCREW	12	12	12	12	12			
43-1	2	127620-91630	SCREW					12		Z	1
			(E=E40733)								
44	2	127620-91410	BRACKET	1	1	1	1	1			
44-1	2	127620-91410	BRACKET					1		Z	1
			(E=E40733)								
45	2	124617-91980	BULB, 12V-1.7W	2	2	2	2	2			
45-1	2	124617-91980	BULB, 12V-1.7W					2		Z	1
			(E=E40733)								
46	2	124617-91920	BULB, 12V-3W	2	2	2	2	2			
46-1	2	124617-91920	BULB, 12V-3W					2		Z	1
			(E=E40733)								
47	2	124617-91990	FUSE	2	2	2	2	2			
47-1	2	124617-91990	FUSE					2		Z	1
			(E=E40733)								
48	1	129470-77540	CORD, EXTENSION 5800	1	1	1	1				
49	1	129470-77500	CORD, EXTENSION 3800	1	1	1	1				
50	1	129100-77910	RELAY, MAGNETIC	1	1	1	1	1		W	
	(A=*1988.08)	(B=*1988.08)	(C=*1988.08) (D=E31796)	(E=*1988.08)							
50-1	1	129490-77910	RELAY, STARTER	1	1	1	1	1		S	
	(A=E07940)	(B=E14619)	(C=E23484) (D=E34965)	(E=E40923)							
51	1	129301-34830	SPACER	2	2	2	2	2		W	
	(A=*1988.08)	(B=*1988.08)	(C=*1988.08) (D=E31796)	(E=*1988.08)							
51-1	1	129301-34830	SPACER	2	2	2	2	2		Z	
	(A=*1989.04)	(B=*1989.04)	(C=*1989.04) (D=*1989.04)	(E=*1989.04)							
52	1	129573-77950	BRACKET	1	1	1	1	1		W	
	(A=*1988.08)	(B=*1988.08)	(C=*1988.08) (D=E31796)	(E=*1988.08)							

N:Old $\xleftarrow[\text{No}]{\text{Yes}}$ New, Q:Old $\xleftarrow[\text{Yes}]{\text{No}}$ New, R:Old $\xleftarrow[\text{Yes}]{\text{Yes}}$ New, S:Old $\xleftarrow[\text{No}]{\text{No}}$ New, W:Add, Z:Discontinued, F:Interchangeable by set, K:Q'ty Change

++ CONTINUE ++

Copyright (C) YANMAR CO., LTD. All RightsReserved.

Fig.59. INSTRUMENT PANEL(D-TYPE)

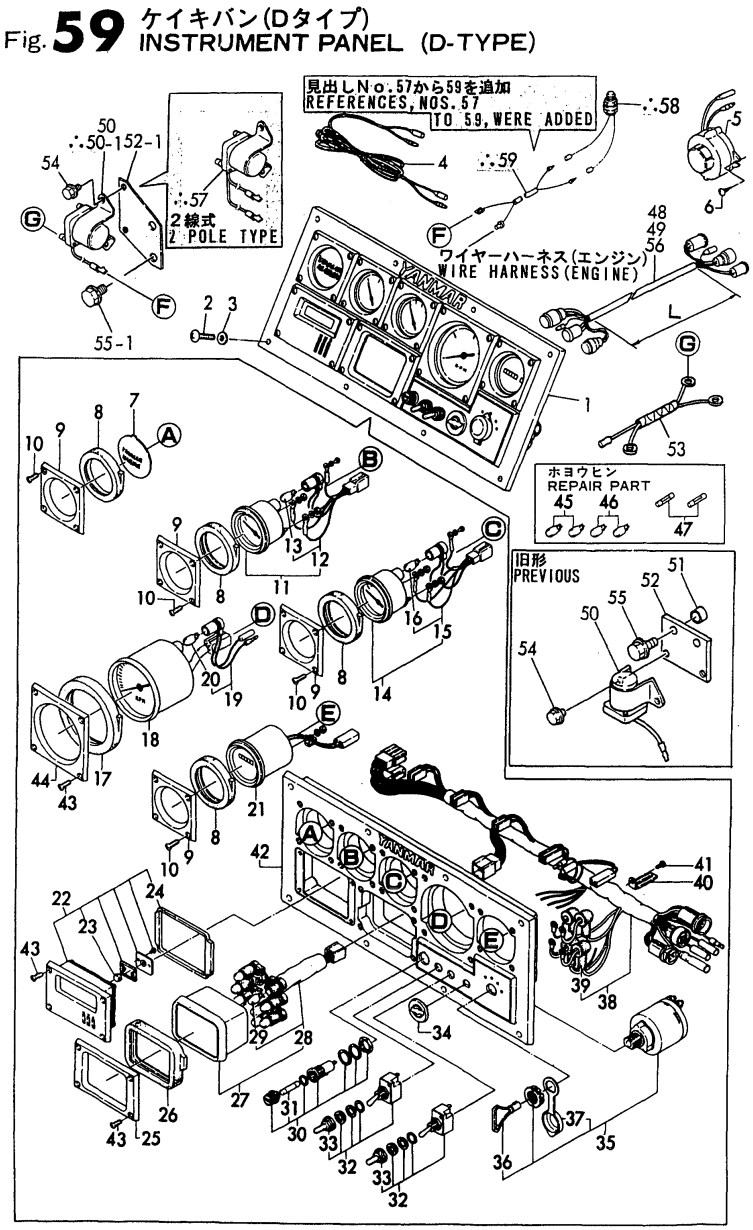

Remarks
(1) THE NEW PANEL TYPE IS 129574
-91190 SHOWN IN FIG 59A.
(2) 2POLE TYPE.

(A)=4JH2E (D)=4JH2-DTE
(B)=4JH2-TE (E)=4JH2-UTE(B)
(C)=4JH2-HTE (F)=

No.	Lev.	Parts No.	Description	Q'ty (A)	(B)	(C)	(D)	(E)	(F)	I	R
52-1	1	129573-77951	BRACKET	1	1	1	1	1		N	
	(A=*1989.04)	(B=*1989.04)	(C=*1989.04) (D=*1989.04)	(E=*1989.04)							
53	1	129573-77960	HARNESS, WIRE	1	1	1	1	1		W	
	(A=*1988.08)	(B=*1988.08)	(C=*1988.08) (D=E31796)	(E=*1988.08)							
54	1	26106-060102	BOLT, M6X 10 PLATED	2	2	2	2	2		W	
	(A=*1988.08)	(B=*1988.08)	(C=*1988.08) (D=E31796)	(E=*1988.08)							
55	1	26106-100252	BOLT, M10X 25 PLATED	2	2	2	2	2		W	
	(A=*1988.08)	(B=*1988.08)	(C=*1988.08) (D=E31796)	(E=*1988.08)							
55-1	1	26106-100162	BOLT, M10X 16 PLATED	2	2	2	2	2		N	
	(A=*1989.04)	(B=*1989.04)	(C=*1989.04) (D=*1989.04)	(E=*1989.04)							
56	1	129470-77530	HARNESS, WIRE 5.8M	1	1	1	1			W	
	(A=*1989.04)	(B=*1989.04)	(C=*1989.04) (D=*1989.04)								
57	1	129570-77920	RELAY, STARTER	1	1	1	1	1		W	2
	(A=E07940)	(B=E14619)	(C=E23484) (D=E34965)	(E=E40923)							
58	1	120270-77101	SWITCH, SAFETY	1	1	1	1	1		W	
	(A=E07940)	(B=E14619)	(C=E23484) (D=E34965)	(E=E40923)							
59	1	129570-77960	HARNESS, WIRE	1	1	1	1	1		W	
	(A=E07940)	(B=E14619)	(C=E23484) (D=E34965)	(E=E40923)							

N:Old ←Yes/No→ New, Q:Old ←No/Yes→ New, R:Old ←Yes/Yes→ New, S:Old ←No/No→ New, W:Add, Z:Discontinued, F:Interchangeable by set, K:Q'ty Change

Copyright (C) YANMAR CO., LTD. All RightsReserved.

Fig.95. (59A)INSTRUMENT PANEL(D-TYPE,NEW)

Fig. 59A パネルD(シンガタ) PANEL D (NEW)

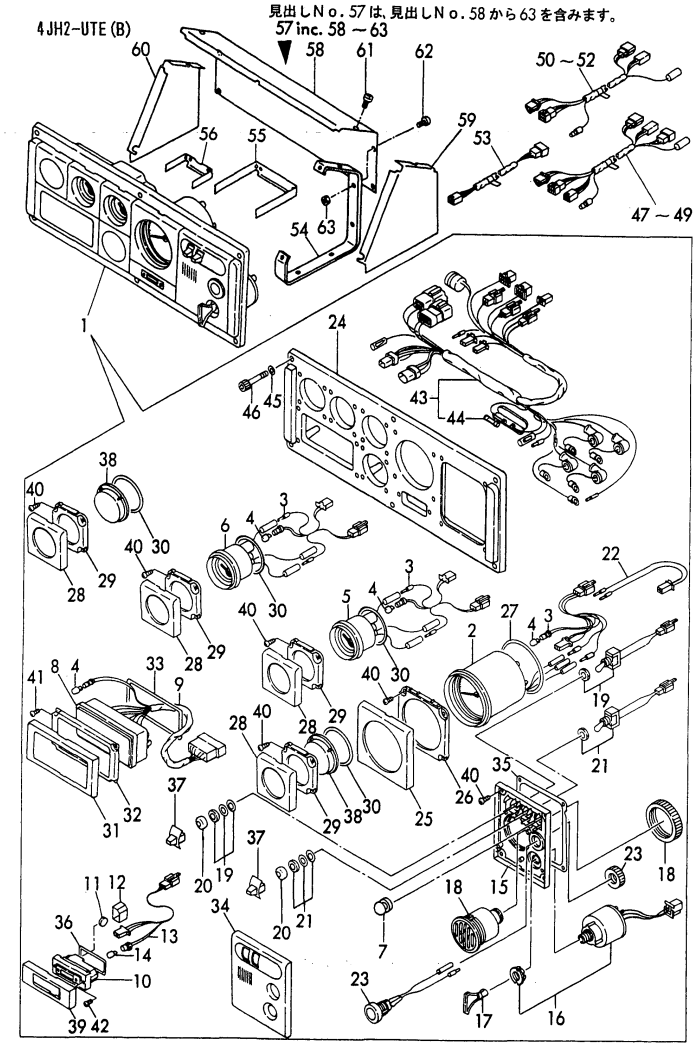

(A)=4JH2E
(B)=4JH2-TE
(C)=4JH2-HTE
(D)=4JH2-DTE
(E)=4JH2-UTE(B)
(F)=

No.	Lev.	Parts No.	Description	Q'ty (A)	(B)	(C)	(D)	(E)	(F)	I	R
1	1	129574-91190	PANEL ASSY, INSTRUM					1		W	
				(E=E40733)							
2	2	129574-91200	METER KIT					1			
3	2	129574-91870	HARNESS, WIRE					3			
4	2	124617-91980	BULB, 12V-1.7W					8			
5	2	129574-91210	METER					1			
6	2	129574-91220	METER					1			
7	2	129170-91810	COVER					1			
8	2	129574-91260	BOX					1			
9	2	129574-91860	WIRE					1			
10	2	129574-91240	CLOCK					1			
11	2	127620-91250	CELL					1			
12	2	129574-91490	HOLDER					1			
13	2	129574-91880	HARNESS, WIRE					1			
14	2	120147-91760	BULB					1			
15	2	129574-91410	BRACKET, SWITCH					1			
16	2	121575-91250	SWITCH, KEY					1			
17	2	123482-91291	KEY					1			
18	2	104271-91352	BUZZER					1			
19	2	129170-91800	SWITCH					1			
20	2	129574-91780	CAP, RUBBER					2			
21	2	129574-91790	SWITCH					1			
22	2	129574-91890	HARNESS, WIRE					1			
23	2	129470-91190	SWITCH, STOP					1			
24	2	129574-91930	PANEL					1			
25	2	129574-91620	BEZEL					1			
26	2	129574-91420	BRACKET					1			
27	2	129574-91720	GASKET					1			
28	2	129574-91630	BEZEL					4			
29	2	129574-91430	BRACKET					4			
30	2	129574-91730	GASKET					4			
31	2	129574-91640	BEZEL					1			
32	2	129574-91440	BRACKET					1			
33	2	129574-91740	GASKET					1			
34	2	129170-91610	BEZEL					1			
35	2	129574-91710	GASKET					1			
36	2	129574-91750	GASKET					1			
37	2	129574-91770	KNOB					2			
38	2	129574-91600	COVER					2			
39	2	129574-91650	BEZEL					1			
40	2	127692-91410	SCREW					24			
41	2	127692-91440	SCREW					4			
42	2	127692-91450	SCREW					2			
43	2	129574-91850	HARNESS, WIRE					1			
44	3	124617-91990	FUSE					1			
45	2	127687-91880	WASHER					6			
46	2	127687-91870	BOLT, M6X35					6			
47	1	129574-77700	HARNESS, WIRE 3M					1			
48	1	129574-77710	HARNESS, WIRE 4M					1			
49	1	129574-77720	HARNESS, WIRE 6M					1			
50	1	129574-77850	HARNESS, WIRE					1			1

N:Old $\xleftarrow[\text{No}]{\text{Yes}}$ New, Q:Old $\xleftarrow[\text{Yes}]{\text{No}}$ New, R:Old $\xleftarrow[\text{Yes}]{\text{Yes}}$ New, S:Old $\xleftarrow[\text{No}]{\text{No}}$ New, W:Add, Z:Discontinued, F:Interchangeable by set, K:Q'ty Change

Remarks
(1) USE IT WHEN MOUNTING THE NEW TYPE PANEL ON THE (OLD TYPE) WIRE HARNESS FOR ENGINE.
(2) USE IT WHEN MOUNTING THE OLD TYPE PANEL ON THE (NEW TYPE) WIRE HARNESS FOR ENGINE.
(3) NOT NEEDED WHEN MOUNTING ON THE SIDE.

++ CONTINUE ++

Copyright (C) YANMAR CO., LTD. All RightsReserved.

Fig.95. (59A)INSTRUMENT PANEL(D-TYPE,NEW)

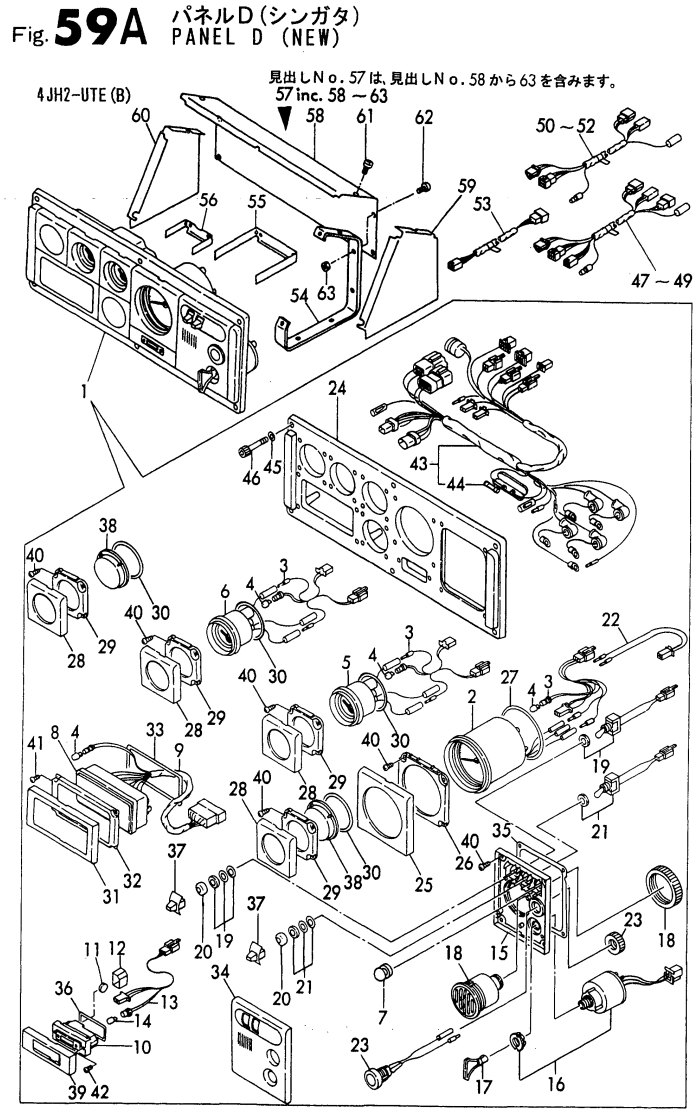

Remarks
(1) USE IT WHEN MOUNTING THE NEW TYPE PANEL ON THE (OLD TYPE) WIRE HARNESS FOR ENGINE.
(2) USE IT WHEN MOUNTING THE OLD TYPE PANEL ON THE (NEW TYPE) WIRE HARNESS FOR ENGINE.
(3) NOT NEEDED WHEN MOUNTING ON THE SIDE.

(A)=4JH2E (D)=4JH2-DTE
(B)=4JH2-TE (E)=4JH2-UTE(B)
(C)=4JH2-HTE (F)=

No.	Lev.	Parts No.	Description	Q'ty (A)	(B)	(C)	(D)	(E)	(F)	I	R
51	1	129574-77860	HARNESS, WIRE					1			2
52	1	127692-91700	HARNESS, WIRE					1			
53	1	127692-91710	HARNESS, WIRE					1			
54	1	129574-91530	BRACKET, PANEL					2			
55	1	129574-91540	BRACKET					1			
56	1	129574-91550	BRACKET					1			
57	1	127692-91900	COVER, PANEL					1			
58	2	127692-91950	COVER, PANEL					1			
59	2	129574-91960	COVER, PANEL					1			
60	2	129574-91970	COVER, PANEL					1			
61	2	26559-060122	SCREW, M6X12					2			
62	2	26556-060122	SCREW M 6X12					4			3
63	2	26716-060002	NUT, M6					4			3

N:Old $\xleftrightarrow[\text{No}]{\text{Yes}}$ New, Q:Old $\xleftrightarrow[\text{Yes}]{\text{No}}$ New, R:Old $\xleftrightarrow[\text{Yes}]{\text{Yes}}$ New, S:Old $\xleftrightarrow[\text{No}]{\text{No}}$ New, W:Add, Z:Discontinued, F:Interchangeable by set, K:Q'ty Change

Copyright (C) YANMAR CO., LTD. All RightsReserved.

Fig.60. INSTRUMENT PANEL(E-TYPE)

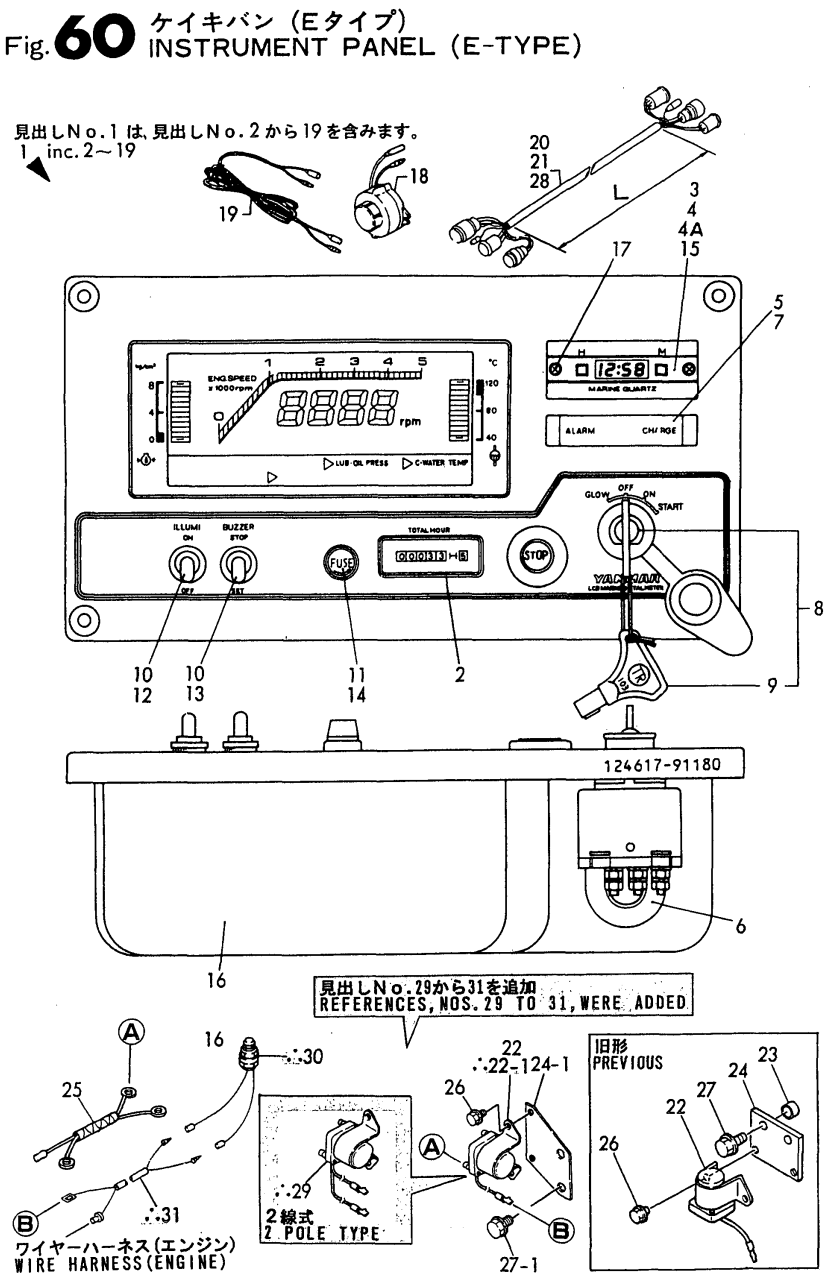

(A)=4JH2E (D)=4JH2-DTE
(B)=4JH2-TE (E)=4JH2-UTE(B)
(C)=4JH2-HTE (F)=

No.	Lev.	Parts No.	Description	Q'ty (A)	(B)	(C)	(D)	(E)	(F)	I	R
1	1	124617-91180	PANEL ASSY, E	1	1	1	1	1			
2	2	120147-91230	HOUR METER	1	1	1	1	1			
3	2	120147-91760	BULB	1	1	1	1	1			
4	2	127687-91240	CLOCK ASSY	1	1	1	1	1			
4A	3	127620-91250	CELL	1	1	1	1	1			
5	2	127687-91220	PILOT BOX ASSY	1	1	1	1	1			
6	2	127687-91800	GROMMET	1	1	1	1	1			
7	2	124617-91920	BULB, 12V-3W	4	4	4	4	4			
8	2	127412-91250	SWITCH, KEY	1	1	1	1	1			
9	3	123482-91291	KEY	2	2	2	2	2			
10	2	127687-91770	CAP	2	2	2	2	2			
11	2	46150-003610	BOX(WITH OUT FUSE	1	1	1	1	1			
12	2	127687-91790	SWITCH	1	1	1	1	1			
13	2	127687-91780	SWITCH	1	1	1	1	1			
14	2	46150-003620	FUSE	1	1	1	1	1			
15	2	127687-91250	GASKET	1	1	1	1	1			
16	2	127687-91840	COVER	1	1	1	1	1			
17	2	127687-91890	SCREW	2	2	2	2	2			
18	2	124617-91900	BUZZER	1	1	1	1	1			
19	2	127620-91580	HARNESS, WIRE	1	1	1	1	1			
20	1	129470-77540	CORD, EXTENSION 5800	1	1	1	1				
21	1	129470-77500	CORD, EXTENSION 3800	1	1	1	1				
22	1	129100-77910	RELAY, MAGNETIC	1	1	1	1	1		W	
	(A=*1988.08)	(B=*1988.08)	(C=*1988.08) (D=E31796)	(E=*1988.08)							
22-1	1	129490-77910	RELAY, STARTER	1	1	1	1	1		W	
	(A=E07940)	(B=E14619)	(C=E23484) (D=E34965)	(E=E40923)							
23	1	129301-34830	SPACER	2	2	2	2	2		W	
	(A=*1988.08)	(B=*1988.08)	(C=*1988.08) (D=E31796)	(E=*1988.08)							
23-1	1	129301-34830	SPACER	2	2	2	2	2		Z	
	(A=*1989.04)	(B=*1989.04)	(C=*1989.04) (D=*1989.04)	(E=*1989.04)							
24	1	129573-77950	BRACKET	1	1	1	1	1		W	
	(A=*1988.08)	(B=*1988.08)	(C=*1988.08) (D=E31796)	(E=*1988.08)							
24-1	1	129573-77951	BRACKET	1	1	1	1	1		N	
	(A=*1989.04)	(B=*1989.04)	(C=*1989.04) (D=*1989.04)	(E=*1989.04)							
25	1	129573-77960	HARNESS, WIRE	1	1	1	1	1		W	
	(A=*1988.08)	(B=*1988.08)	(C=*1988.08) (D=E31796)	(E=*1988.08)							
26	1	26106-060102	BOLT, M6X 10 PLATED	2	2	2	2	2		W	
	(A=*1988.08)	(B=*1988.08)	(C=*1988.08) (D=E31796)	(E=*1988.08)							
27	1	26106-100252	BOLT, M10X 25 PLATED	2	2	2	2	2		W	
	(A=*1988.08)	(B=*1988.08)	(C=*1988.08) (D=E31796)	(E=*1988.08)							
27-1	1	26106-100162	BOLT, M10X 16 PLATED	2	2	2	2	2		N	
	(A=*1989.04)	(B=*1989.04)	(C=*1989.04) (D=*1989.04)	(E=*1989.04)							
28	1	129470-77530	HARNESS, WIRE 5.8M	1	1	1	1			W	
	(A=*1989.04)	(B=*1989.04)	(C=*1989.04) (D=*1989.04)								
29	1	129570-77920	RELAY, STARTER	1	1	1	1	1		W	1
	(A=E07940)	(B=E14619)	(C=E23484) (D=E34965)	(E=E40923)							
30	1	120270-77101	SWITCH, SAFETY	1	1	1	1	1		W	
	(A=E07940)	(B=E14619)	(C=E23484) (D=E34965)	(E=E40923)							
31	1	129570-77960	HARNESS, WIRE	1	1	1	1	1		W	
	(A=E07940)	(B=E14619)	(C=E23484) (D=E34965)	(E=E40923)							

Remarks
(1) 2POLE TYPE.

N:Old $\overset{\text{Yes}}{\underset{\text{No}}{\leftrightarrow}}$ New, Q:Old $\overset{\text{No}}{\underset{\text{Yes}}{\leftrightarrow}}$ New, R:Old $\overset{\text{Yes}}{\underset{\text{Yes}}{\leftrightarrow}}$ New, S:Old $\overset{\text{No}}{\underset{\text{No}}{\leftrightarrow}}$ New, W:Add, Z:Discontinued, F:Interchangeable by set, K:Q'ty Change

Copyright (C) YANMAR CO., LTD. All RightsReserved.

Fig.61. REPAIR SET

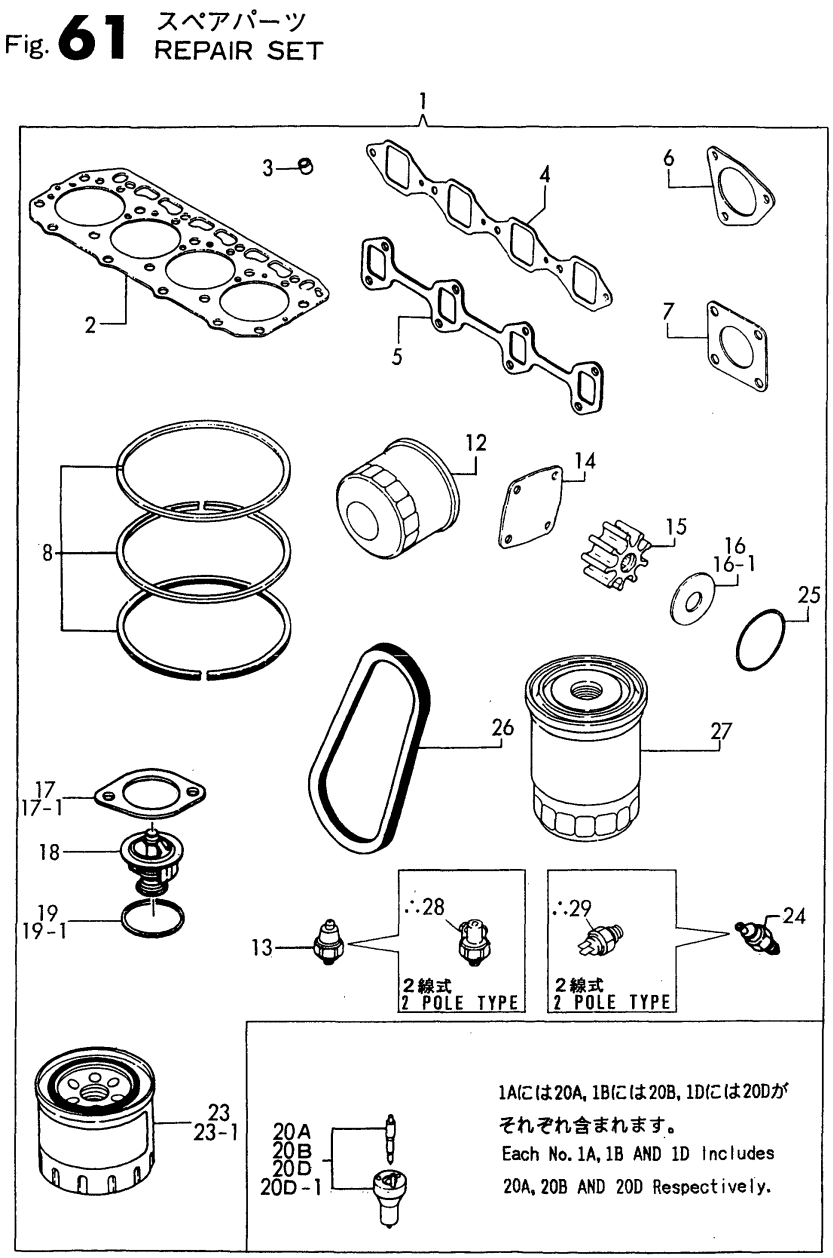

Remarks
(1) 2POLE TYPE.
(2) NOT USED FOR THE 2 POLE TYPE.

(A)=4JH2E (D)=4JH2-DTE
(B)=4JH2-TE (E)=4JH2-UTE(B)
(C)=4JH2-HTE (F)=

No.	Lev.	Parts No.	Description	Q'ty (A)	(B)	(C)	(D)	(E)	(F)	I	R
1A	1	729570-92500	PARTS KIT, SPARE	1							
1B	1	729571-92500	PARTS KIT, SPARE		1	1					
1D	1	729573-92500	PARTS KIT, SPARE				1				
1E	1	729574-92500	PARTS KIT, SPARE					1			
1F	1	729570-92510	PARTS KIT, SPARE	1						W	1
	(A=E07940)										
1G	1	729572-92510	PARTS KIT, SPARE		1	1				W	1
			(B=E14619) (C=E23484)								
1H	1	729573-92510	PARTS KIT, SPARE				1			W	1
			(D=E34965)								
1I	1	729574-92510	PARTS KIT, SPARE					1		W	1
			(E=E40923)								
2	2	129573-01351	GASKET, HEAD	1	1	1	1	1			
3	2	119625-11870	PROTECTOR, NOZZLE	4	4	4	4	4			
4	2	129550-12110	GASKET, MANIFOLD				1				
4-1	2	129470-12130	GASKET, MANIFOLD	1	1	1	1	1		N	
			(D=E31928)								
5	2	129550-13110	GASKET	1	1	1	1	1			
6	2	129792-13520	GASKET				1				
6-1	2	129472-13520	GASKET		1	1	1	1		N	
			(D=E31928)								
7	2	129792-18090	GASKET				1				
7-1	2	129472-18090	GASKET	1	1	1	1	1		N	
			(D=E31928)								
8	2	729573-22500	RING SET, PISTON	4	4	4	4	4			
12	2	129150-35150	FILTER 90X80L	1	1	1	1	1			2
13	2	124060-39451	SWITCH, 0.2KG	1	1	1	1	1			
14	2	129470-42520	COVER	1	1	1	1	1			
15	2	129470-42530	IMPELLER	1	1	1	1	1			
16-1	2	129470-42540	PLATE	1	1	1	1	1			
17	2	129795-49550	GASKET				1				
17-1	2	129470-49550	GASKET	1	1	1	1	1		N	
			(D=E31928)								
18	2	129470-49801	THERMOSTAT, 76.5	1	1	1	1	1			
19	2	129150-49810	GASKET, THERMOSTAT				1				
19-1	2	129470-49810	GASKET, THERMOSTAT	1	1	1	1	1		N	
			(D=E31928)								
20A	2	129570-53000	VALVE ASSY,INJECTION	4							
20B	2	129595-53000	VALVE ASSY,INJECTION		4	4		4			
20D	2	129573-53000	VALVE ASSY,INJECTION				4				
20D-1	2	129573-53500	VALVE ASSY,INJECTION				4			N	
			(D=1988.11)								
23	2	129470-55700	STRAINER	1	1	1	1				
23-1	2	129470-55701	STRAINER ASSY, FUEL	1	1	1	1			M	
	(A=*1991.01)	(B=*1991.01)	(C=*1991.01) (D=*1991.01)								
24	2	127610-91350	SWITCH, 95				1				
24-1	2	120130-91370	SWITCH, 100	1	1	1	1	1			2
			(D=E31796)								
25	2	24341-000600	O-RING, 1AS60.0	1	1	1	1	1			
26	2	25132-004600	V-BELT, A46	1	1	1	1	1			
27	2	129574-55710	FILTER, FUEL					1			

N:Old $\overset{\text{Yes}}{\underset{\text{No}}{\leftrightarrow}}$ New, Q:Old $\overset{\text{No}}{\underset{\text{Yes}}{\leftrightarrow}}$ New, R:Old $\overset{\text{Yes}}{\underset{\text{Yes}}{\leftrightarrow}}$ New, S:Old $\overset{\text{No}}{\underset{\text{No}}{\leftrightarrow}}$ New, W:Add, Z:Discontinued, F:Interchangeable by set, K:Q'ty Change

++ CONTINUE ++

Copyright (C) YANMAR CO., LTD. All RightsReserved.

Fig.61. REPAIR SET

(A)=4JH2E
(B)=4JH2-TE
(C)=4JH2-HTE
(D)=4JH2-DTE
(E)=4JH2-UTE(B)
(F)=

No.	Lev.	Parts No.	Description	Q'ty (A)	(B)	(C)	(D)	(E)	(F)	I	R
28	2	126630-91591	SWITCH,OIL PRESSURE	1	1	1	1	1		W	1
	(A=E07940)	(B=E14619)	(C=E23484) (D=E34965) (E=E40923)								
29	2	129570-91320	SWITCH, 100	1	1	1	1	1		W	1
	(A=E07940)	(B=E14619)	(C=E23484) (D=E34965) (E=E40923)								

Fig. 61 スペアパーツ REPAIR SET

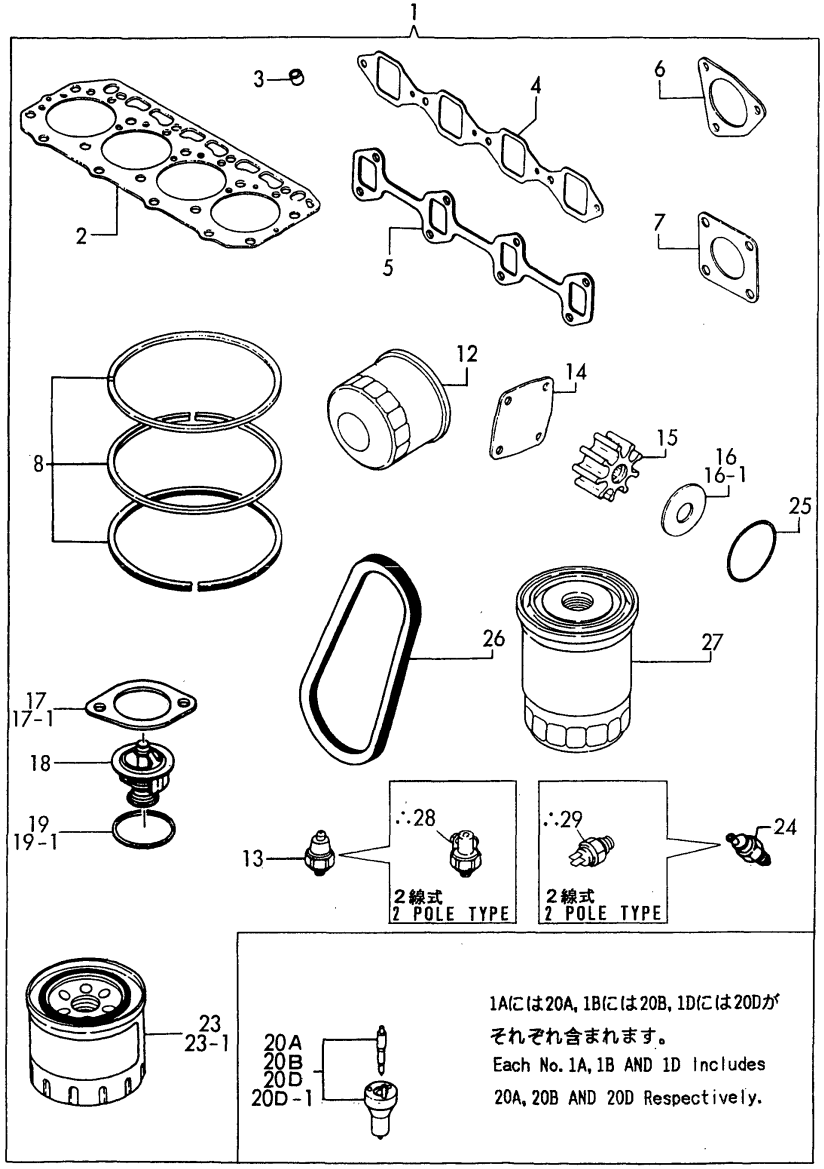

Remarks
(1) 2POLE TYPE.
(2) NOT USED FOR THE 2 POLE TYPE.

N:Old $\xleftarrow[\text{No}]{\text{Yes}}$ New, Q:Old $\xleftarrow[\text{Yes}]{\text{No}}$ New, R:Old $\xleftarrow[\text{Yes}]{\text{Yes}}$ New, S:Old $\xleftarrow[\text{No}]{\text{No}}$ New, W:Add, Z:Discontinued, F:Interchangeable by set, K:Q'ty Change

Copyright (C) YANMAR CO., LTD. All RightsReserved.

Fig.62. GASKET SET

Fig. 62 パッキンセット GASKET SET

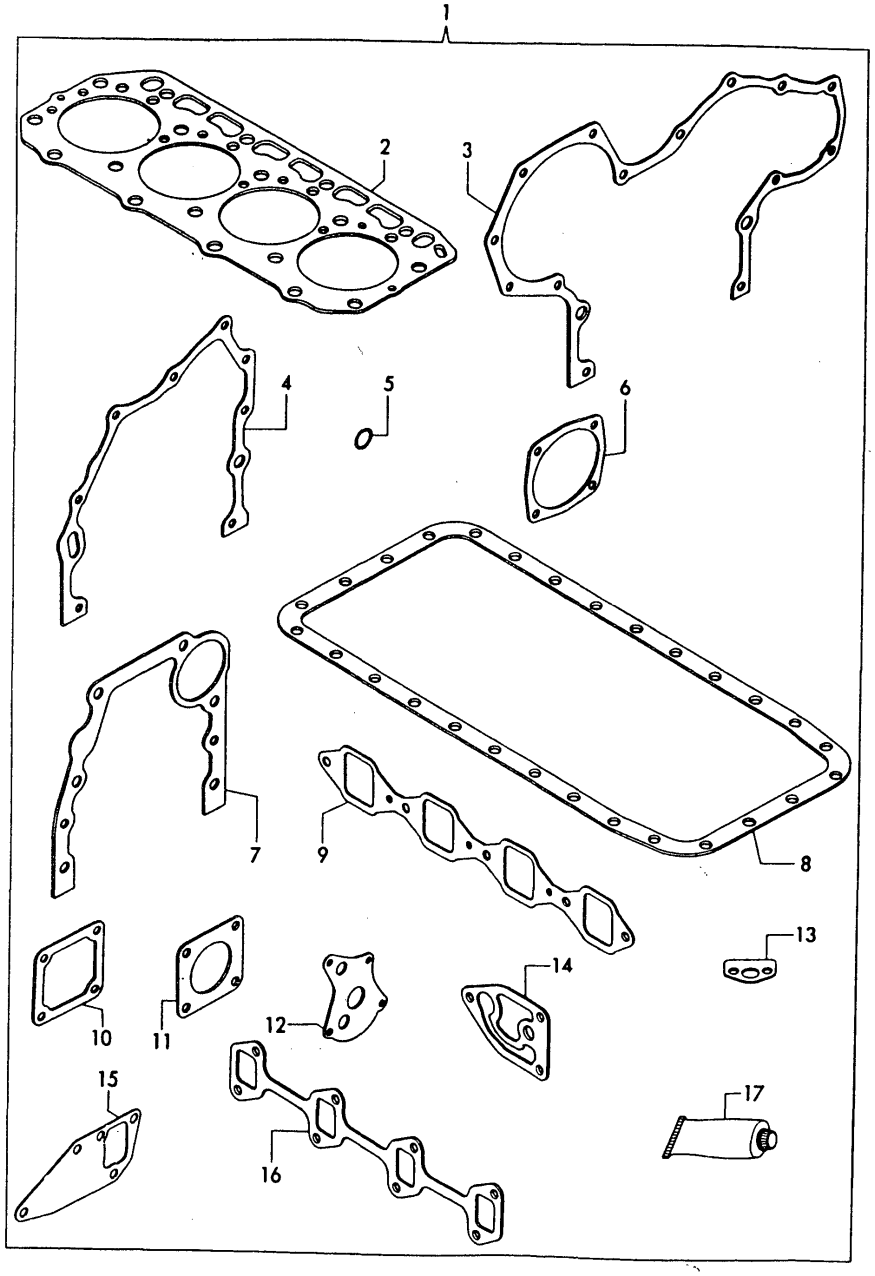

(A)=4JH2E (B)=4JH2-TE (C)=4JH2-HTE (D)=4JH2-DTE (E)=4JH2-UTE(B) (F)=

No.	Lev.	Parts No.	Description	Q'ty (A)	(B)	(C)	(D)	(E)	(F)	I	R
1	1	729573-92600	GASKET SET				1				
1-1	1	729573-92601	GASKET SET (D=E31928)	1	1	1	1	1		N	
2	2	129573-01351	GASKET, HEAD	1	1	1	1	1			
3	2	129150-01510	GASKET, GEAR CASE				1				
3-1	2	129470-01510	GASKET, GEAR CASE (D=E31928)	1	1	1	1	1		N	
4	2	129150-01530	GASKET, GEAR CASE				1				
4-1	2	129470-01530	GASKET (D=E31928)	1	1	1	1	1		N	
5	2	129470-01550	O-RING	1	1	1	1	1			
6	2	129150-01880	GASKET				1				
6-1	2	129470-01880	GASKET, GEAR CASE (D=E31928)	1	1	1	1	1		N	
6-2	2	129150-01881	GASKET	1	1	1	1	1		R	
	(A=*1991.03)	(B=*1991.03)	(C=*1991.03) (D=*1991.03) (E=*1991.03)								
6-3	2	129C26-01890	GASKET, HO-P	1	1	1	1	1		R	
	(A=EXXXXX)	(B=EXXXXX)	(C=EXXXXX) (D=EXXXXX) (E=EXXXXX)								
7	2	129100-01620	GASKET				1				
7-1	2	129470-01620	GASKET (D=E31928)	1	1	1	1	1		N	
8	2	129400-01750	GASKET, OIL SUMP				1				
8-1	2	129470-01750	GASKET, OIL SUMP (D=E31928)	1	1	1	1	1		N	
9	2	129550-12110	GASKET, MANIFOLD				1				
9-1	2	129470-12130	GASKET, MANIFOLD (D=E31928)	1	1	1	1	1		N	
10	2	129150-77510	GASKET				1				
10-1	2	129470-77590	GASKET (D=E31928)	1	1	1	1	1		N	
11	2	129792-18090	GASKET				1				
11-1	2	129472-18090	GASKET (D=E31928)	1	1	1	1	1		N	
12	2	129150-32020	GASKET, PUMP	1	1	1	1	1			
13	2	129150-35040	GASKET				1				
13-1	2	129470-35040	GASKET (D=E31928)	1	1	1	1	1		N	
14	2	129470-35120	GASKET				1				
14-1	2	129470-35121	GASKET (D=E31928)	1	1	1	1	1		N	
15	2	129150-42020	GASKET, WATER PUMP	1	1	1	1	1			
16	2	129550-13110	GASKET	1	1	1	1	1			
17	2	977770-01212	GASKET, LIQUID	1	1	1	1	1			

N:Old ←Yes/No→ New, Q:Old ←No/Yes→ New, R:Old ←Yes/Yes→ New, S:Old ←No/No→ New, W:Add, Z:Discontinued, F:Interchangeable by set, K:Q'ty Change

Copyright (C) YANMAR CO., LTD. All RightsReserved.

Fig.63. REEQUIP MENT KIT

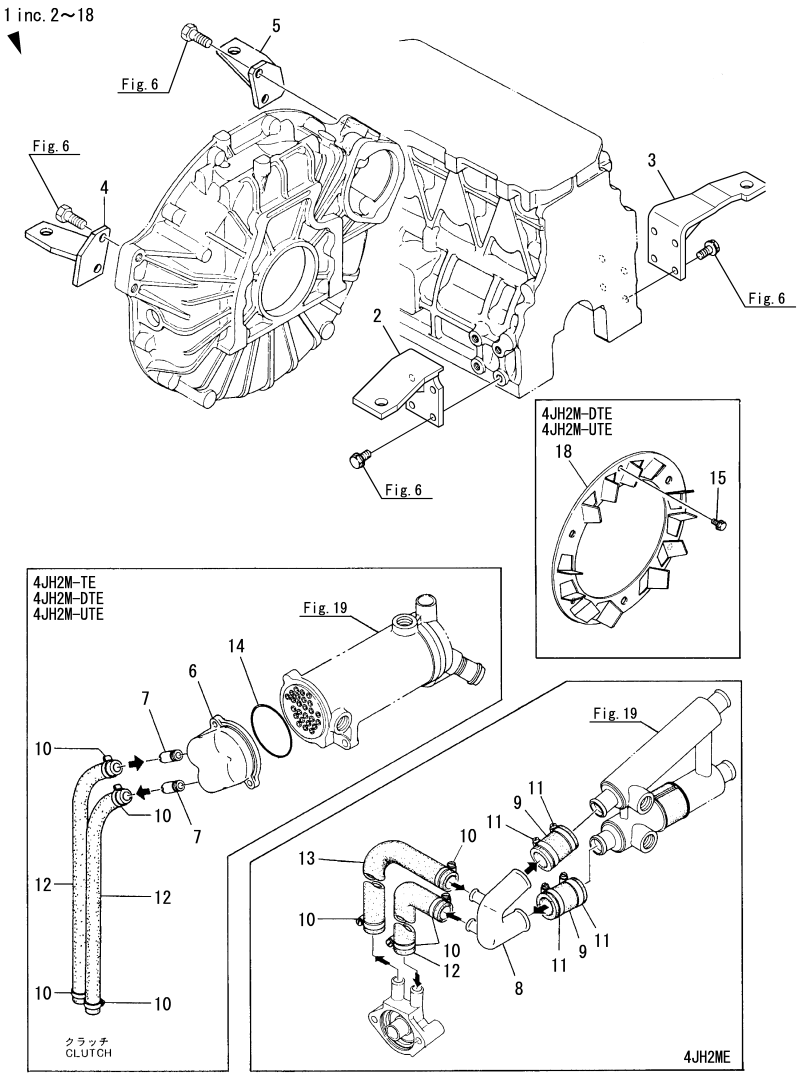

(A)=4JH2E
(B)=4JH2-TE
(C)=4JH2-HTE
(D)=4JH2-DTE
(E)=4JH2-UTE(B)
(F)=

No.	Lev.	Parts No.	Description	Q'ty (A)	(B)	(C)	(D)	(E)	(F)	I	R
1	1	729570-82790	RE-MODEL KIT	1							1
1A	1	729571-82790	RE-MODEL KIT		1						2
1B	1	729572-82790	RE-MODEL KIT			1					3
1C	1	729573-82790	RE-MODEL KIT				1	1			4
2	2	129473-08100	FOOT	1	1	1	1	1			
3	2	129473-08110	FOOT	1	1	1	1	1			
4	2	129473-08120	FOOT	1	1	1	1	1			
5	2	129473-08130	FOOT	1	1	1	1	1			
6	2	129474-33030	COVER, B		1						
7	2	104271-49060	JOINT, PIPE		2						
8	2	129470-49060	PIPE, WATER	1							
9	2	129470-49110	JOINT, 25X55	2							
10	2	23000-022000	CLAMP, 22	4	4		4	4			
11	2	23000-035000	CLAMP, 35	2							
12	2	23072-040300	HOSE, 4X 300	1	2		2	2			
13	2	23072-040350	HOSE, 4X 350	1							
14	2	24321-000750	O-RING, 1AG75.0		1						
15	2	26106-080162	BOLT, M8X 16 PLATED				6	6			
18	2	177073-03191	FAN				1	1			

Remarks
(1)4JH2ME.
(2)4JH2M-TE.
(3)4JH2M-HTE.
(4)4JH2M-DTE,4JH2M-UTE.

N:Old $\frac{\text{Yes}}{\text{No}}$ New, Q:Old $\frac{\text{No}}{\text{Yes}}$ New, R:Old $\frac{\text{Yes}}{\text{Yes}}$ New, S:Old $\frac{\text{No}}{\text{No}}$ New, W:Add, Z:Discontinued, F:Interchangeable by set, K:Q'ty Change

Copyright (C) YANMAR CO., LTD. All RightsReserved.

Fig.64. CLUTCH ASSY(KM4A)

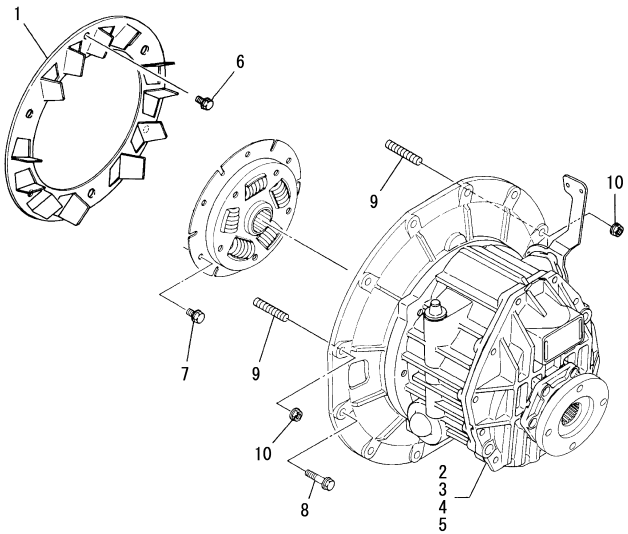

(A)=4JH2E (D)=4JH2-DTE
(B)=4JH2-TE (E)=4JH2-UTE(B)
(C)=4JH2-HTE (F)=

No.	Lev.	Parts No.	Description	Q'ty (A)	(B)	(C)	(D)	(E)	(F)	I	R
1	1	177073-03191	FAN				1	1			
			(D=E31808)	(E=E31808)							
2	1	129473-81001	CLUTCH ASSY, 1.47	1	1	1	1	1			1
3	1	129473-81012	CLUTCH ASSY, 2.14	1	1	1	1	1			2
4	1	129473-81022	CLUTCH ASSY, I=2.63	1	1	1	1				3
5	1	129473-81032	CLUTCH ASSY, I=3.30	1	1	1	1	1			4
6	1	26106-080162	BOLT, M8X 16 PLATED				3	3			
			(D=E31808)	(E=E31808)							
7	1	26106-080162	BOLT, M8X 16 PLATED	6	6	6	6	6			
8	1	26106-100302	BOLT, M10X 30 PLATED	8	8	8	8	8			
9	1	26226-100222	STUD, M10X 22	2	2	2	2	2			
10	1	26716-100002	NUT, M10	2	2	2	2	2			

Remarks
(1)4JH2SSBE, 4JH2SS-TBE, 4JH2SS-HTBE, 4JH2SS-DTBE, 4JH2SS-UTBE.
(2)4JH2SBE, 4JH2S-TBE, 4JH2S-HTBE, 4JH2S-DTBE, 4JH2SS-UTBE.
(3)4JH2GBE, 4JH2A-TBE, 4JH2G-HTBE, 4JH2G-DTBE.
(4)4JH2GGBE, 4JH2GG-TBE, 4JH2GG-HTBE, 4JH2GG-DTBE, 4JH2GG-UTBE.

N:Old $\frac{\text{Yes}}{\text{No}}$ New, Q:Old $\frac{\text{No}}{\text{Yes}}$ New, R:Old $\frac{\text{Yes}}{\text{Yes}}$ New, S:Old $\frac{\text{No}}{\text{No}}$ New, W:Add, Z:Discontinued, F:Interchangeable by set, K:Q'ty Change

Copyright (C) YANMAR CO., LTD. All RightsReserved.

Fig.73. CLUTCH ASSY(KBW20)

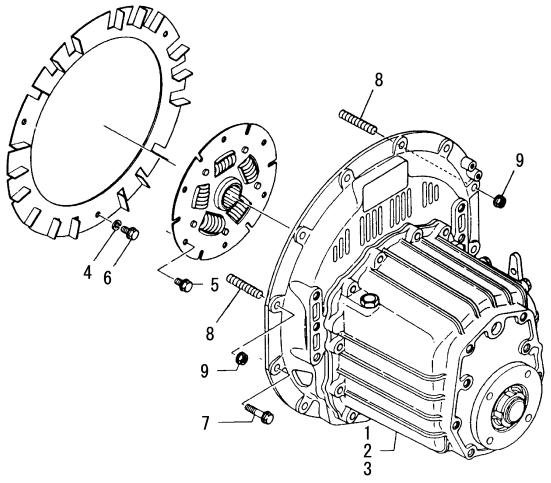

(A)=4JH2E
(B)=4JH2-TE
(C)=4JH2-HTE
(D)=4JH2-DTE
(E)=4JH2-UTE(B)
(F)=

No.	Lev.	Parts No.	Description	Q'ty (A)	(B)	(C)	(D)	(E)	(F)	I	R
1	1	129472-81011	CLUTCH ASSY, 2.17	1	1						1
2	1	129472-81021	CLUTCH ASSY, I=2.62	1	1						2
3	1	129472-81031	CLUTCH ASSY, I=3.28	1							3
4	1	22217-080000	WASHER, SPRING 8	3	3						
5	1	26106-080162	BOLT, M8X 16 PLATED	6	6						
6	1	26106-080162	BOLT, M8X 16 PLATED	3	3						
7	1	26106-100302	BOLT, M10X 30 PLATED	8	8						
8	1	26226-100222	STUD, M10X 22	2	2						
9	1	26716-100002	NUT, M10	2	2						

Remarks
(1)4JH2SE, 4JH2S-TE.
(2)4JH2GE, 4JH2G-TE.
(3)4JH2GGE.

N:Old $\overset{\text{Yes}}{\underset{\text{No}}{\leftrightarrows}}$ New, Q:Old $\overset{\text{No}}{\underset{\text{Yes}}{\leftrightarrows}}$ New, R:Old $\overset{\text{Yes}}{\underset{\text{Yes}}{\leftrightarrows}}$ New, S:Old $\overset{\text{No}}{\underset{\text{No}}{\leftrightarrows}}$ New, W:Add, Z:Discontinued, F:Interchangeable by set, K:Q'ty Change

Copyright (C) YANMAR CO., LTD. All RightsReserved.

Fig.80. CLUTCH ASSY(KBW21)

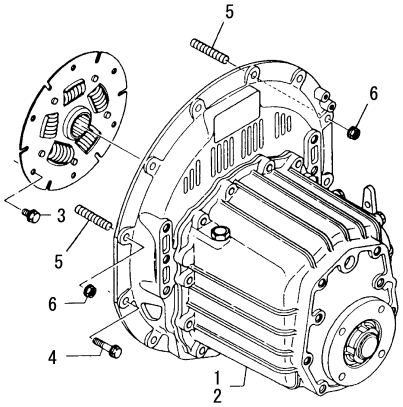

(A)=4JH2E
(B)=4JH2-TE
(C)=4JH2-HTE
(D)=4JH2-DTE
(E)=4JH2-UTE(B)
(F)=

No.	Lev.	Parts No.	Description	Q'ty (A)	(B)	(C)	(D)	(E)	(F)	I	R
1	1	129474-81011	CLUTCH ASSY, 2.17			1	1				1
2	1	129474-81021	CLUTCH ASSY, I=2.62			1					2
3	1	26106-080162	BOLT, M8X 16 PLATED			6	6				
4	1	26106-100302	BOLT, M10X 30 PLATED			8	8				
5	1	26226-100222	STUD, M10X 22			2	2				
6	1	26716-100002	NUT, M10			2	2				

Remarks
(1)4JH2S-HTE,4JH2S-DTE.
(2)4JH2G-HTE.

N:Old $\xleftrightarrow[\text{No}]{\text{Yes}}$ New, Q:Old $\xleftrightarrow[\text{Yes}]{\text{No}}$ New, R:Old $\xleftrightarrow[\text{Yes}]{\text{Yes}}$ New, S:Old $\xleftrightarrow[\text{No}]{\text{No}}$ New, W:Add, Z:Discontinued, F:Interchangeable by set, K:Q'ty Change

Copyright (C) YANMAR CO., LTD. All RightsReserved.

Fig.87. CLUTCH ASSY(KM3P2)

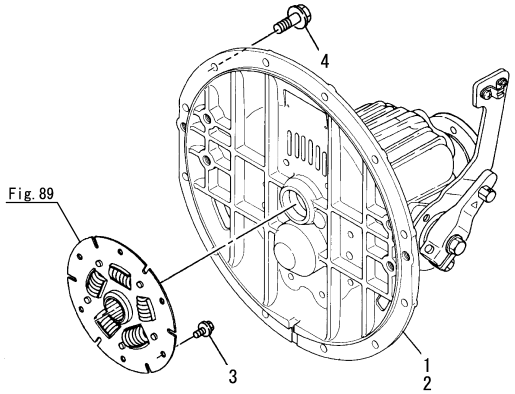

(A)=4JH2E
(B)=4JH2-TE
(C)=4JH2-HTE
(D)=4JH2-DTE
(E)=4JH2-UTE(B)
(F)=

No.	Lev.	Parts No.	Description	Q'ty (A)	(B)	(C)	(D)	(E)	(F)	I	R
1	1	129570-81010	CLUTCH, KM3P2 I2.36	1							1
2	1	129570-81020	CLUTCH, KM3P2 I2.61	1							2
3	1	26106-080162	BOLT, M8X 16 PLATED	6							
4	1	26106-100302	BOLT, M10X 30 PLATED	10							

Remarks
(1)4JH2SPE.
(2)4JH2GPE.

N:Old $\xleftrightarrow[\text{No}]{\text{Yes}}$ New, Q:Old $\xleftrightarrow[\text{Yes}]{\text{No}}$ New, R:Old $\xleftrightarrow[\text{Yes}]{\text{Yes}}$ New, S:Old $\xleftrightarrow[\text{No}]{\text{No}}$ New, W:Add, Z:Discontinued, F:Interchangeable by set, K:Q'ty Change

Copyright (C) YANMAR CO., LTD. All RightsReserved.

Fig.88. CLUTCH HOUSING

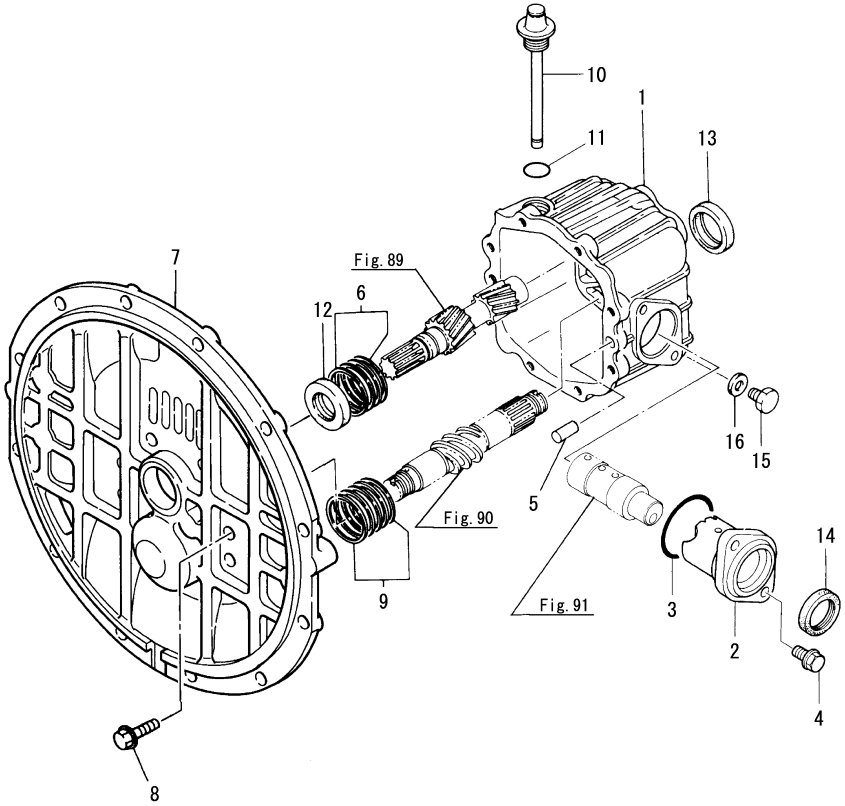

(A)=4JH2E
(B)=4JH2-TE
(C)=4JH2-HTE
(D)=4JH2-DTE
(E)=4JH2-UTE(B)
(F)=

No.	Lev.	Parts No.	Description	Q'ty (A)	(B)	(C)	(D)	(E)	(F)	I	R
1	1	177070-02012	HOUSING, CLUTCH	1							
2	1	177088-02120	COVER	1							
3	1	24321-000400	O-RING, 1AG40.0	1							
4	1	26016-080302	BOLT, M8X 30	2							
5	1	22312-100160	PIN, PARALLEL M10X16	2							
6	1	177088-02350	SHIM SET	1							
7	1	177070-02080	FLANGE	1							
8	1	26016-080252	BOLT, M8X 25	8							
9	1	177088-02300	SHIM SET	1							
10	1	177088-02451	DIPSTICK	1							
11	1	24311-000180	O-RING, 1AP18.0	1							
12	1	177088-02950	SEAL SC25 40 8, OIL	1							
13	1	177088-02961	SEAL MHSA34 44 8,OIL	1							
14	1	24421-284008	SEAL, OIL TC284008	1							
15	1	23887-100002	PLUG, 10	1							
16	1	23414-100000	GASKET, 10X1.0	1							

N:Old $\xleftrightarrow[\text{No}]{\text{Yes}}$ New, Q:Old $\xleftrightarrow[\text{Yes}]{\text{No}}$ New, R:Old $\xleftrightarrow[\text{Yes}]{\text{Yes}}$ New, S:Old $\xleftrightarrow[\text{No}]{\text{No}}$ New, W:Add, Z:Discontinued, F:Interchangeable by set, K:Q'ty Change

Copyright (C) YANMAR CO., LTD. All RightsReserved.

Fig.89. INPUT SHAFT & COUNTER SHAFT

(A)=4JH2E
(B)=4JH2-TE
(C)=4JH2-HTE
(D)=4JH2-DTE
(E)=4JH2-UTE(B)
(F)=

No.	Lev.	Parts No.	Description	Q'ty (A)	(B)	(C)	(D)	(E)	(F)	I	R
1	1	177088-03400	ROLLER BERING	2							
2	1	177070-03031	SHAFT, INPUT I=2.36	1							1
3	1	177070-03011	SHAFT, INPUT I=2.61	1							2
4	1	177070-03520	DISK, DAMPER D190	1							
5	1	177070-03302	SHAFT, IDLE	1							
6	1	177088-03311	GEAR, IDLE Z=26	1							
7	1	177088-03331	NEEDLE BERG.#K162213	2							
8	1	177088-03341	WASHER, THRUST	1							
9	1	24341-000120	O-RING, 1AS12.0	1							
10	1	177073-03191	FAN	1							
11	1	26106-080162	BOLT, M8X 16 PLATED	6							

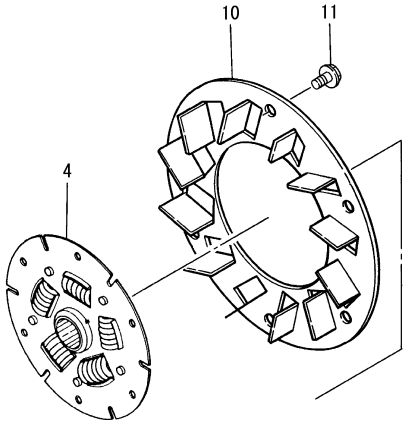

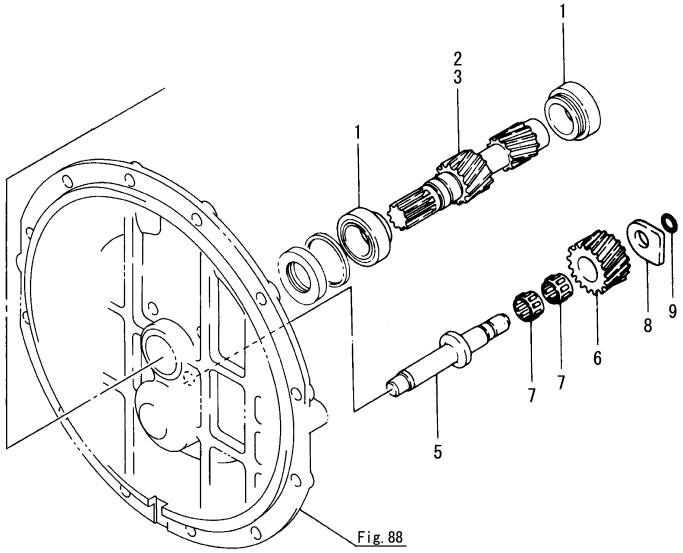

Remarks
(1)4JH2SPE.
(2)4JH2GPE.

N:Old $\xleftarrow[\text{No}]{\text{Yes}}$ New, Q:Old $\xleftarrow[\text{Yes}]{\text{No}}$ New, R:Old $\xleftarrow[\text{Yes}]{\text{Yes}}$ New, S:Old $\xleftarrow[\text{No}]{\text{No}}$ New, W:Add, Z:Discontinued, F:Interchangeable by set, K:Q'ty Change

Copyright (C) YANMAR CO., LTD. All RightsReserved.

Fig.90. OUTPUT SHAFT

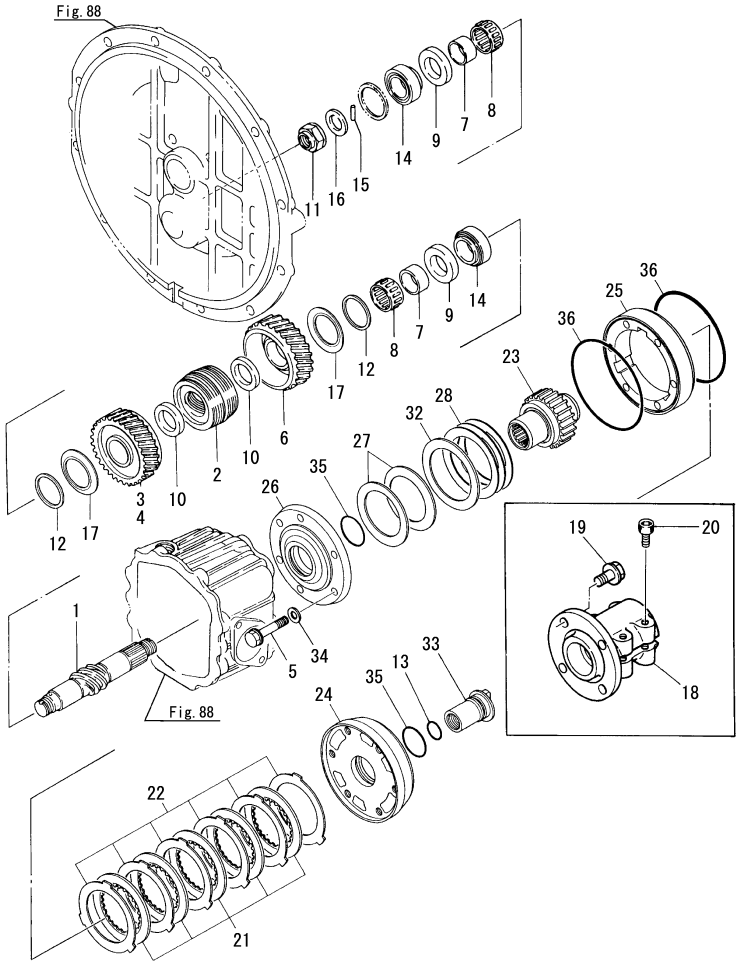

(A)=4JH2E
(B)=4JH2-TE
(C)=4JH2-HTE
(D)=4JH2-DTE
(E)=4JH2-UTE(B)
(F)=

No.	Lev.	Parts No.	Description	Q'ty (A)	(B)	(C)	(D)	(E)	(F)	I	R
1	1	177070-03041	SHAFT, OUTPUT	1							
2	1	177070-03071	CONE, DRIVE	1							
3	1	177070-03131	GEAR, FORWARD Z=59	1							1
4	1	177070-03112	GEAR, Z=60	1							2
5	1	26106-080452	BOLT, M8X 45 PLATED	6							
6	1	177070-03112	GEAR, Z=60	1							
7	1	177070-03190	RACE, BEARING	2							
8	1	177070-03200	NEEDLE BEARING	2							
9	1	177070-03231	COLLAR, THRUST	2							
10	1	177070-03250	COLLAR, THRUST	2							
11	1	177088-03272	NUT	1							
12	1	177073-03340	RETAINER, SPRING	2							
13	1	24311-000210	O-RING, 1AP21.0	1							
14	1	24141-302050	BEARING, 30205	2							
15	1	177088-03290	PIN	1							
16	1	177088-03280	COLLAR, 32D-45T	1							
17	1	177088-03540	SPRING	2							
18	1	104214-83980	COUPLING	1							3
19	1	26106-100222	BOLT, M10X 22 PLATED	4							3
20	1	26450-080302	BOLT, M8X 30	4							3
21	1	177040-03080	DISK, FRICTION	5							
22	1	177090-03090	PLATE, STEEL	6							
23	1	177070-03651	HOLDER	1							
24	1	177070-03660	COUPLING	1							
25	1	177070-03670	HOUSING	1							
26	1	177070-03681	COVER, HOUSING	1							
27	1	177070-03691	SPRING	2							
28	1	177070-03700	SHIM SET	1							
32	1	177070-03741	SPACER	1							
33	1	177070-03750	NUT, LOCK	1							
34	1	22190-080000	WASHER, SEAL 8	6							
35	1	24311-000340	O-RING, 1AP34.0	2							
36	1	24341-001050	O-RING, 1AS105.0	2							

Remarks
(1)4JH2SPE.
(2)4JH2GPE.
(3)Optional parts.

N:Old $\xleftarrow[\text{No}]{\text{Yes}}$ New, Q:Old $\xleftarrow[\text{Yes}]{\text{No}}$ New, R:Old $\xleftarrow[\text{Yes}]{\text{Yes}}$ New, S:Old $\xleftarrow[\text{No}]{\text{No}}$ New, W:Add, Z:Discontinued, F:Interchangeable by set, K:Q'ty Change

Copyright (C) YANMAR CO., LTD. All RightsReserved.

Fig.91. CONTROL DEVICE

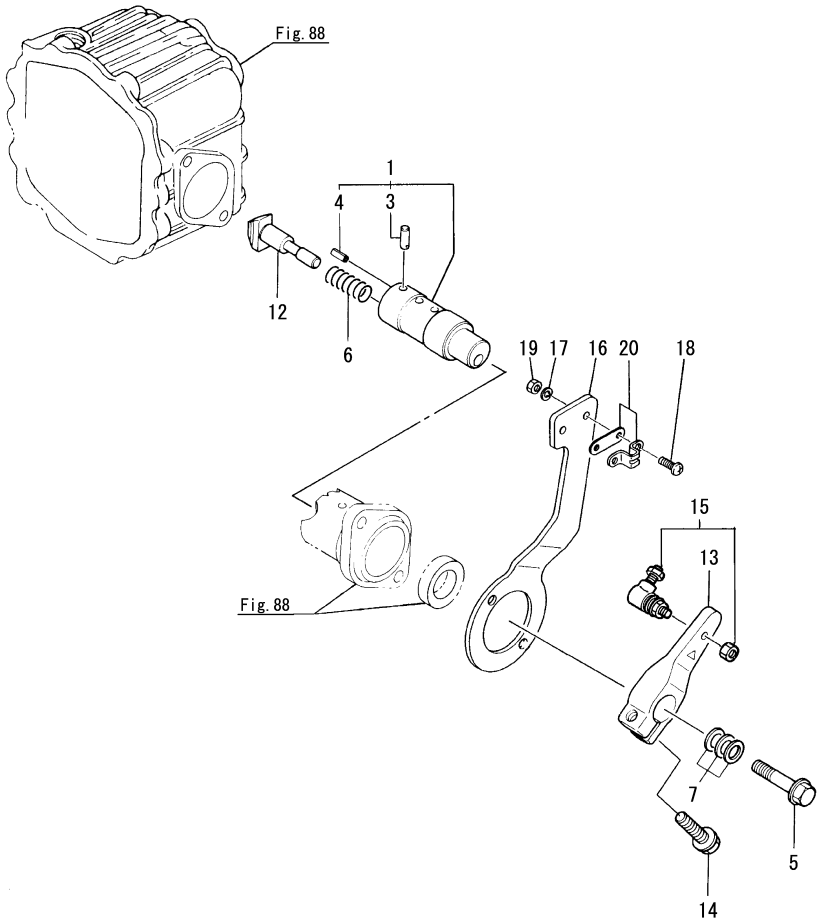

(A)=4JH2E
(B)=4JH2-TE
(C)=4JH2-HTE
(D)=4JH2-DTE
(E)=4JH2-UTE(B)
(F)=

No.	Lev.	Parts No.	Description	Q'ty (A)	(B)	(C)	(D)	(E)	(F)	I	R
1	1	177088-06340	SHAFT ASSY	1							
3	2	196322-06610	PIN, PARALLEL 5X18	1							
4	2	22351-020012	PIN, SPRING 2.0X12	1							
5	1	177088-06360	BOLT	1							
6	1	177088-06370	SPRING	1							
7	1	177088-06380	SHIM SET	1							
12	1	177088-06390	SHIFTER	1							
13	1	177088-06400	LEVER	1							
14	1	26106-080252	BOLT, M8X 25 PLATED	1							
15	1	41710-001300	JOINT, BALL	1							
16	1	177070-06610	STAY	1							
17	1	22217-050000	WASHER, SPRING 5	2							
18	1	26557-050162	SCREW, M5X16	2							
19	1	26716-050002	NUT, M5	2							
20	1	41710-000410	CLAMP	1							

N:Old $\xleftarrow[\text{No}]{\text{Yes}}$ New, Q:Old $\xleftarrow[\text{Yes}]{\text{No}}$ New, R:Old $\xleftarrow[\text{Yes}]{\text{Yes}}$ New, S:Old $\xleftarrow[\text{No}]{\text{No}}$ New, W:Add, Z:Discontinued, F:Interchangeable by set, K:Q'ty Change

Copyright (C) YANMAR CO., LTD. All RightsReserved.

Fig.92. TOOL(OPTIONAL)

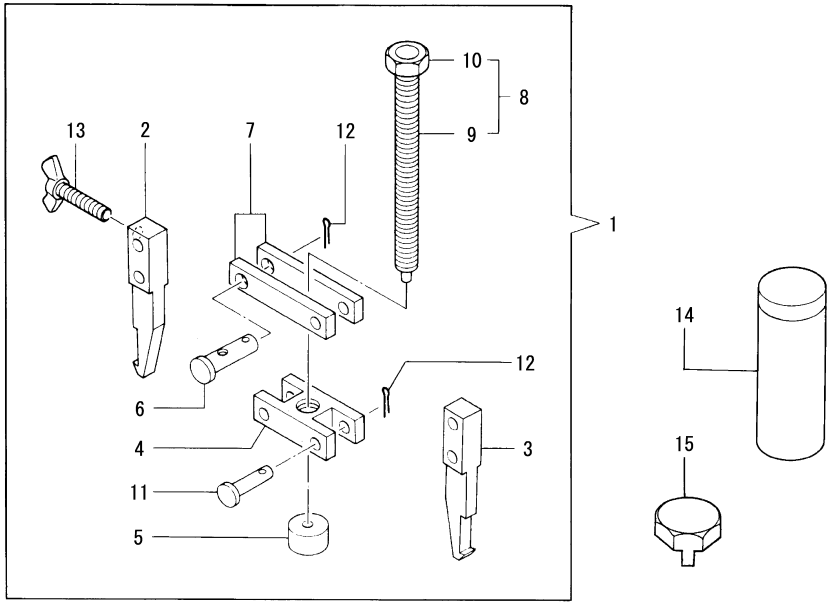

(A)=4JH2E
(B)=4JH2-TE
(C)=4JH2-HTE
(D)=4JH2-DTE
(E)=4JH2-UTE(B)
(F)=

No.	Lev.	Parts No.	Description	Q'ty (A)	(B)	(C)	(D)	(E)	(F)	I	R
1	1	177088-09010	TOOL ASSY, REMOVER	1							
2	2	177088-09020	TOOL	1							
3	2	177088-09030	TOOL	1							
4	2	177088-09040	SUPPORT	1							
5	2	177088-09050	RETAINER	1							
6	2	177088-09060	PIN	1							
7	2	177088-09070	SUPPORT	2							
8	2	177088-09080	BOLT ASSY	1							
9	3	177088-09090	BOLT	1							
10	3	26736-100002	NUT, M10	1							
11	2	22487-060240	PIN, H 6X 24	3							
12	2	22417-160120	PIN, COTTER 1.6X12	4							
13	2	26646-040352	WING BOLT	1							
14	1	177088-09150	TOOL, DRIVE	1							
15	1	177070-09030	SOCKET	1							

N:Old $\overset{\text{Yes}}{\underset{\text{No}}{\leftrightarrows}}$ New, Q:Old $\overset{\text{No}}{\underset{\text{Yes}}{\leftrightarrows}}$ New, R:Old $\overset{\text{Yes}}{\underset{\text{Yes}}{\leftrightarrows}}$ New, S:Old $\overset{\text{No}}{\underset{\text{No}}{\leftrightarrows}}$ New, W:Add, Z:Discontinued, F:Interchangeable by set, K:Q'ty Change

Copyright (C) YANMAR CO., LTD. All RightsReserved.

Parts No. Index

Parts No.	Fig. No.	Ref. No.
101304-59020	35	1
		9
103338-11190	7	18
		18 -1
104104-67300	37	65
	38	60
104200-59170	35	4
104200-92350	45	2
104200-92600	45	3
104214-39720	4	15
104214-83980	90	18
104271-49060	19	11
	63	7
104271-91351	57	2
104271-91352	93	12
	94	15
	95	18
104407-44480	14	33 -1
	24	21 -1
		35 -1
105300-44451	36	1
105311-67200	40	22
114250-53080	32	14
	33	6
114250-53120	32	18
	33	10
114250-53130	32	19
	33	11
114250-53140	32	20
	33	12
114250-53210	32	21
	33	13
114250-53400	32	22
	33	14
119000-59550	35	14
	36	19
119171-14400	12	5
119171-59910	36	15
119171-77701	44	17
119171-77710	44	18
119171-77980	44	19
119620-54900	34	10
119625-11870	7	27
	61	3
119625-11880	7	29
119625-11900	7	28
119843-61540	37	34
120130-11860	7	47
120130-49350	15	22
	16	18

Parts No.	Fig. No.	Ref. No.
120130-49350	24	22
120130-91370	44	14
	53	6 -1
	54	6 -1
	61	24 -1
120147-91230	60	2
120147-91760	60	3
	95	14
120220-59150	21	19
120270-77101	57	28
	58	55
	59	58
	60	30
120322-33050	19	10
		20
	24	44 A
120324-91900	94	47
120324-91950	94	48
120445-44530	46	3
120445-44540	46	4
120445-44600	24	50
120445-44620	5	7
	24	53
120445-44640	24	54
		65
121023-01550	2	5
121111-21501	17	14
121252-39150	21	3
121370-08351	46	1
121400-11340	7	19
121450-01560	2	7
	31	1
121550-23200	18	16
121574-86320	40	27
121575-91250	58	35
	59	35
		35 -1
	93	10
	94	13
	95	16
121750-03080	8	8
121750-59890	35	5
	39	7
	52	12
121850-01910	8	4
121850-11860	7	9
121850-21680	17	13
121850-35200	20	14
121850-35520	20	16
121850-35531	20	17

Parts No.	Fig. No.	Ref. No.
121850-51960	29	55
	30	55
121850-54900	34	16
121857-55750	36	7
121857-55760	36	8
121870-59930	32	35
122117-51560	29	43
	30	43
122710-51050	29	5
	30	5
122710-51090	29	8
	30	8
122780-59100	32	29
	33	21
123310-77640	41	41
123325-49421	19	12
		22
	48	7
123325-49490	15	6
	16	6
123372-59100	32	30
123482-39670	44	11
	54	11
123482-91291	57	5
	58	36
	59	36
		36 -1
	60	9
	93	11
	94	14
	95	17
123682-07850	5	6
123682-44210	24	51
123682-44220	24	52
123682-77710	52	13
124000-03300	24	1
124060-39451	44	7
	53	1
	54	1
	61	13
124066-59100	35	10
	36	18
124070-59060	51	1
124070-59110	10	14
	11	16
124070-59130	51	2
124070-77950	44	3
	53	4
	54	4
124080-77520	47	20

Parts No.	Fig. No.	Ref. No.
124160-01751	2	8
	8	12
124160-01910	1	4
124160-11360	8	14
124160-39140	10	13
	11	15
	21	2
124160-49480	24	9
		26
		36
124223-35510	20	15
124310-54800	34	9
124410-54940	34	20
124411-91010	57	17
124411-91180	59	1
		1 -1
124411-91190	57	1
124413-39100	20	27
124413-39710	21	26
124413-91300	44	13
124460-11340	7	20
124460-77680	1	33
	14	35
	15	27
	16	23
	24	27
	27	7
124550-21600	17	17
124550-51350	29	29
	30	29
124550-51370	29	30
	30	30
124550-59820	21	27
124550-66370	37	64
	38	59
124550-77030	41	39
124617-91180	60	1
124617-91810	59	27
		27 -1
124617-91820	59	21
		21 -1
124617-91830	59	11
		11 -1
124617-91840	58	23
	59	14
		14 -1
124617-91850	44	20
	52	16
124617-91900	58	9
	59	5

Parts No. Index

Parts No.	Fig. No.	Ref. No.
124617-91900	59	5 -1
	60	18
124617-91910	59	12
		12 -1
124617-91920	58	21
		42
	59	13
		13 -1
		16
		16 -1
		20
		20 -1
		46
		46 -1
	60	7
124617-91930	59	15
		15 -1
124617-91940	59	38
		38 -1
124617-91950	59	19
		19 -1
124617-91970	59	28
		28 -1
124617-91980	58	25
		41
	59	29
		29 -1
		45
		45 -1
	93	4
	94	4
	95	4
124617-91990	58	31
		43
	59	31
		31 -1
		47
		47 -1
	93	34
	94	39
	95	44
124722-59050	26	8
124736-07900	7	50
124770-49310	52	11
124770-77940	44	2
	53	3
	54	3
124790-44560	46	5
124950-51190	29	15
	30	15

Parts No.	Fig. No.	Ref. No.
126630-07370	5	5
126630-91560	44	28
	54	21
126630-91570	44	29
	54	22
126630-91591	44	26
	53	16
	54	19
	61	28
127410-91510	58	13
127410-91520	58	14
127410-91530	58	15
127410-91550	58	17
127410-91560	58	19
127410-91570	58	20
127410-91580	58	16
		22
127410-91590	58	24
		34
127410-91600	58	26
127410-91610	58	27
127410-91620	58	28
127410-91630	58	29
127410-91680	58	4
127412-91250	57	4
	60	8
127420-44560	28	2
127610-77710	44	18 -1
127610-91350	53	6
	54	6
	61	24
127611-07350	5	4
127620-91240	59	22
		22 -1
127620-91250	59	23
		23 -1
	60	4 A
	95	11
127620-91410	59	44
		44 -1
127620-91500	58	2
	59	2
		2 -1
127620-91510	58	3
	59	3
		3 -1
127620-91550	58	6
127620-91560	58	5
127620-91570	58	7
127620-91580	58	8

Parts No.	Fig. No.	Ref. No.
127620-91580	59	4
		4 -1
	60	19
127620-91600	59	7
		7 -1
127620-91610	59	8
		8 -1
127620-91620	59	9
		9 -1
127620-91630	59	10
		10 -1
		43
		43 -1
127620-91690	59	17
		17 -1
127620-91720	59	24
		24 -1
127620-91730	59	25
		25 -1
127620-91740	59	26
		26 -1
127620-91780	58	33
	59	33
		33 -1
127620-91790	58	32
	59	32
		32 -1
127620-91810	59	34
		34 -1
127620-91820	57	8
	58	37
	59	37
		37 -1
127620-91830	58	39
	59	39
		39 -1
127620-91860	59	40
		40 -1
127620-91870	59	41
		41 -1
127620-91930	59	42
		42 -1
127687-91220	60	5
127687-91240	60	4
127687-91250	60	15
127687-91770	60	10
127687-91780	60	13
127687-91790	60	12
127687-91800	60	6
127687-91840	60	16

Parts No.	Fig. No.	Ref. No.
127687-91870	93	7
	94	41
	95	46
127687-91880	93	36
	94	40
	95	45
127687-91890	60	17
127692-91410	93	30
	94	35
	95	40
127692-91440	93	31
	94	36
	95	41
127692-91450	93	32
	94	37
	95	42
127692-91700	93	44
	94	57
	95	52
127692-91710	93	45
	94	58
	95	53
127692-91900	95	57
127692-91950	95	58
128170-13600	14	30
	24	6
128170-86500	56	1
128170-91020	57	9
128170-91031	57	10
128170-91160	44	12
	53	5
	54	5
128170-91310	57	3
128170-91810	57	12
128170-91820	57	13
128170-91830	57	14
128370-86280	43	2
128371-01800	1	32
128391-77700	93	41
128391-77710	93	40
128391-91260	93	5
128391-91440	93	23
128391-91640	93	22
128391-91700	93	35
128391-91740	93	24
128391-91860	93	6
128391-91930	93	18
128695-44090	14	32
	26	1
	27	1

Parts No. Index

Parts No.	Fig. No.	Ref. No.
128695-44090	28	1
128696-91100	57	15
	59	18
		18 -1
129100-01620	3	2
	62	7
129100-11100	7	14
129100-11110	7	15
129100-35140	20	13
129100-59560	36	20
129100-59951	35	17
129100-61400	37	20
	38	14
129100-61730	37	50
	38	51
129100-61821	38	54
129100-61930	37	60
	38	57
129100-77500	9	20
	10	24
	15	39
	16	38
129100-77510	9	21
	10	25
	15	40
	16	39
129100-77910	57	20
	58	47
	59	50
	60	22
129150-01200	1	28
129150-01510	2	2
	62	3
129150-01520	2	3
129150-01530	2	4
	62	4
129150-01870	2	10
129150-01880	2	11
	22	17
	62	6
129150-01881	2	11 -2
	22	17 -2
	62	6 -2
129150-02020	1	14
129150-02450	1	35
129150-02800	1	17
129150-02870	1	39
129150-02930	1	20
129150-02940	1	40
129150-03070	8	7

Parts No.	Fig. No.	Ref. No.
129150-11230	7	39
129150-11280	7	36
129150-11370	7	21
129150-11750	7	40
129150-11810	7	48
129150-14101	12	3
129150-14200	12	4
129150-21200	17	3
		8
129150-23610	18	19
129150-25020	12	7
129150-25052	12	8
129150-25061	12	11
129150-25101	12	9
129150-25900	29	80
129150-32020	20	25
	62	12
129150-35040	20	1
	62	13
129150-35150	20	20
	61	12
129150-42020	23	3
	62	15
129150-42320	23	2
129150-49810	23	15
	61	19
129150-59580	35	16
	36	21
129150-77510	16	22
	62	10
129155-11260	7	34
129155-11270	7	35
129155-51020	29	61
	30	61
129155-51140	29	12
	30	12
129155-51180	29	14
	30	14
129155-51200	29	16
	30	16
129155-51270	29	22
	30	22
129155-51280	29	23
	30	23
	37	1
	38	1
129155-51380	29	32
	30	32
129155-51390	29	33
	30	33

Parts No.	Fig. No.	Ref. No.
129155-51410	29	35
	30	35
129155-51420	29	35 A
	30	35 A
129155-51450	29	36
	30	36
129155-51521	29	39
	30	39
129155-51530	29	40
	30	40
129155-51540	29	41
	30	41
129155-51550	29	42
	30	42
129155-51570	29	45
	30	45
129155-51580	29	46
	30	46
129155-51591	29	47
	30	47
129155-51600	29	48
	30	48
129155-51790	29	53
	30	53
129155-52050	29	63
	30	63
129155-61011	38	2
129155-61050	38	3
129155-61060	37	5
	38	4
129155-61070	37	6
	38	5
129155-61120	37	8
	38	6
129155-61130	37	9
	38	7
129155-61140	37	10
	38	8
129155-61341	37	19
	38	13
129155-61430	37	23
	38	17
129155-61450	37	25
	38	22
129155-61460	37	26
	38	23
129155-61470	37	27
	38	24
129155-61480	38	25
129155-61490	37	28

Parts No.	Fig. No.	Ref. No.
129155-61490	38	30
129155-61540	37	35
	38	49
129155-61810	37	54
	38	53
129155-61830	37	56
	38	55
129155-61950	38	58
129156-44760	23	5
129156-51910	29	54
	30	54
129158-52020	29	66
	30	66
129158-52060	29	68
	30	68
129158-52070	29	69
	30	69
129158-52080	29	70
	30	70
129158-52090	29	71
	30	71
129158-52100	29	64
	30	64
129158-52160	29	72
	30	72
129158-52250	29	73
	30	73
129158-52260	29	74
	30	74
129158-52270	29	75
	30	75
129158-52350	29	76
	30	76
129158-52360	29	77
	30	77
129158-52370	29	78
	30	78
129158-52380	29	79
	30	79
129170-91260	94	8
129170-91610	93	25
	94	30
	95	34
129170-91650	93	8
	94	11
129170-91800	93	13
	94	16
	95	19
129170-91810	93	17
	94	10

Parts No. Index

Parts No.	Fig. No.	Ref. No.
129170-91810	95	7
129170-91850	94	38
129170-91860	94	9
129170-91890	94	19
129170-91930	94	20
129171-07900	7	50 -1
129198-07350	5	4 -1
129301-03660	8	18 -1
129301-34830	4	12
	57	21
		21 -1
	58	48
		48 -1
	59	51
		51 -1
	60	23
		23 -1
129400-01600	3	1
129400-01750	4	3
	62	8
129400-77501	9	23
	10	26
	15	43
	16	42
129410-03990	8	19 -1
129470-01501	2	1
129470-01510	2	2 -1
	62	3 -1
129470-01530	2	4 -1
	62	4 -1
129470-01550	2	6
	62	5
129470-01620	3	2 -1
	62	7 -1
129470-01710	4	2
129470-01750	4	3 -1
	62	8 -1
129470-01880	2	11 -1
	22	17 -1
	62	6 -1
129470-03010	8	6
129470-03090	8	17
129470-07230	7	49
129470-08100	6	7
129470-08110	6	8
129470-08120	6	9
129470-08350	46	2
129470-11090	7	6
129470-11850	7	5
129470-11920	7	46

Parts No.	Fig. No.	Ref. No.
129470-11920	32	4
	33	2
129470-12100	9	1
	10	1
	11	1
129470-12120	9	3
	10	3
	11	3
129470-12130	9	5
	10	5
	11	5 -1
	61	4 -1
	62	9 -1
129470-12210	9	6
129470-12300	9	9
	10	6
	11	6
129470-12301	10	6 -1
	11	6 -1
129470-12320	9	11
	10	8
	11	8
129470-12330	9	12
	10	9
	11	9
129470-13540	48	10
129470-13560	13	5
129470-14011	12	2
129470-21000	17	1
129470-21650	17	11
129470-32000	20	24
129470-33000	19	1
129470-33510	19	26
129470-33550	19	3
129470-35040	20	1 -1
	62	13 -1
129470-35100	20	9
129470-35101	20	9 -1
129470-35120	20	19
	62	14
129470-35121	20	19 -1
	62	14 -1
129470-35130	20	10
129470-35131	20	10 -1
129470-39200	21	4
129470-39201	21	4 -1
129470-39300	21	10
129470-39451	21	16
129470-39600	44	8
	53	8

Parts No.	Fig. No.	Ref. No.
129470-39600	54	10
129470-42000	23	1
129470-42001	23	1 -1
129470-42520	22	3
	61	14
129470-42530	22	4
	61	15
129470-42540	61	16 -1
129470-42550	22	6
129470-42700	22	14
129470-44000	24	7
129470-44110	24	41
129470-44440	24	44
129470-44450	19	21
	24	48
129470-44900	24	3 -1
129470-49010	26	2
129470-49030	26	3
129470-49040	26	4
		4 -1
	27	4
129470-49050	48	12
129470-49060	26	5
	63	8
129470-49110	26	6
	63	9
129470-49200	28	3
129470-49220	28	4
129470-49240	26	7
	28	5
129470-49250	28	6
129470-49260	28	7
129470-49540	23	19
129470-49550	23	13 -1
	61	17 -1
129470-49801	23	14
	61	18
129470-49810	23	15 -1
	61	19 -1
129470-51060	29	6
	30	6
129470-51080	29	7
	30	7
129470-51101	29	9
	30	9
129470-54510	34	2
129470-54650	34	8
129470-55601	35	28
129470-55700	35	30
	61	23

Parts No.	Fig. No.	Ref. No.
129470-55701	35	30 -1
	61	23 -1
129470-59120	35	2
		3
129470-59530	35	12
129470-59540	35	13
	36	14
129470-59560	35	15
129470-59811	32	31 A
129470-59821	32	32 A
129470-59831	32	33 A
129470-59841	32	34 A
129470-61650	38	50
129470-67200	40	2
129470-67300	52	2
129470-67310	52	3
129470-67320	52	4
129470-67550	39	5
129470-67560	39	6
129470-77200	47	1
129470-77330	42	21
	47	21
129470-77340	42	22
	47	22
129470-77500	58	46
	59	49
	60	21
129470-77530	57	19
		26
		26 -1
	58	53
		53 -1
	59	56
	60	28
129470-77540	58	45
	59	48
	60	20
129470-77590	9	13
	10	15
	15	26
	16	22 -1
	62	10 -1
129470-77920	53	2
129470-77930	54	2
129470-77970	52	14
129470-77980	52	15
129470-83750	55	1
129470-85900	55	4
129470-86250	43	1
129470-86310	43	3

Parts No. Index

Parts No.	Fig. No.	Ref. No.
129470-86500	56	3
129470-91100	58	1
129470-91150	58	38
129470-91160	58	11
129470-91170	58	18
129470-91180	58	44
129470-91190	57	16
	58	40
	93	16
	94	7
	95	23
129470-92300	45	8
129470-92310	45	9
129470-92320	45	10
129472-03090	8	16
129472-13500	48	1
129472-13520	13	1
	48	4 -1
	61	6 -1
129472-13550	48	5
129472-13560	48	3
129472-14011	12	1
129472-18090	13	6
	14	31 -1
	48	11
	61	7 -1
	62	11 -1
129472-39020	21	1
129472-39600	21	23
129472-39620	21	25
129472-49040	25	3
	27	5
129472-49050	48	6
129472-81011	73	1
129472-81021	73	2
129472-81031	73	3
129473-01700	4	1
129473-08100	6	1
	63	2
129473-08110	6	2
	63	3
129473-08120	6	3
	63	4
129473-08130	6	4
	63	5
129473-18000	14	3
129473-18101	16	1
129473-34850	4	13
129473-34861	4	14
129473-34880	4	14 -1

Parts No.	Fig. No.	Ref. No.
129473-35090	20	2
129473-35091	20	2 -1
129473-44000	24	19
129473-44111	24	42
129473-44900	24	4 -1
129473-49310	28	8
129473-61801	38	52
129473-81001	64	2
129473-81012	64	3
129473-81022	64	4
129473-81032	64	5
129473-85900	55	5
129473-85910	55	6
129474-18001	14	2
129474-18100	15	1
129474-18120	16	10
129474-18140	15	13
	16	12
129474-18150	15	15
	16	13
129474-18170	15	38
	16	37
129474-18180	15	18
	16	14
129474-18220	15	3
	16	3
129474-18230	15	4
	16	4
129474-18240	15	5
129474-18241	15	5 -1
	16	5
129474-21000	17	1 -1
129474-33000	19	4
129474-33010	19	5
		16
129474-33030	19	6
	63	6
129474-33040	19	7
		17
129474-33050	19	8
		18
129474-33500	19	25
129474-39200	21	7
129474-39201	21	7 -1
129474-39450	21	20
129474-44480	14	33
	24	21
		35
129474-49010	25	1
129474-49020	15	21

Parts No.	Fig. No.	Ref. No.
129474-49020	16	17
129474-49030	25	2
	27	3
129474-49110	25	4
	27	6
129474-49320	28	9
129474-81011	80	1
129474-81021	80	2
129475-49040	26	15
129490-21650	17	19
129490-77910	57	20 -1
	58	47 -1
	59	50 -1
	60	22 -1
129495-39320	21	13
129495-39350	21	14
129495-39360	21	15
129495-49010	27	2
129495-59300	35	11
129499-33000	19	15
129499-54550	34	5
129499-59811	32	31
129499-59821	32	32
129499-59831	32	33
129499-59841	32	34
129499-61440	37	24
	38	21
129499-61650	37	45
129499-61890	37	57
	38	56
129500-61500	38	31
129506-51040	29	4
	30	4
129506-53000	32	5 -1
129550-11290	7	31
129550-11310	8	3
129550-12110	11	5
	61	4
	62	9
129550-13110	24	2
	61	5
	62	16
129550-42350	23	4
129553-39190	21	21
129553-39650	1	37
129555-11241	7	30
129555-51400	29	34
	30	34
129555-51500	29	37
	30	37

Parts No.	Fig. No.	Ref. No.
129555-51700	29	49
	30	49
129555-51710	29	50
	30	50
129555-51750	29	51
	30	51
129555-51760	29	52
	30	52
129570-07500	5	17
129570-07501	5	17 -1
129570-12300	9	9 -1
129570-21590	17	15 -1
129570-21591	17	15 A-2
129570-22000	18	1
129570-22500	18	20
129570-53000	32	5
	61	20 A
129570-77820	53	11
	54	14
129570-77920	57	27
	58	54
	59	57
	60	29
129570-77960	57	29
	58	56
	59	59
	60	31
129570-81010	87	1
129570-81020	87	2
129570-91320	44	27
	53	17
	54	20
	61	29
129570-91850	93	33
129571-07500	5	18
129571-07501	5	18 -1
129571-18000	14	1
129571-18130	10	10
129571-18140	10	23
129572-07500	5	19
129572-07501	5	19 -1
129572-18000	14	38
129572-21590	17	15 B-2
129572-22000	18	2
129572-22500	18	21
129573-01341	1	29
129573-01351	1	30
	61	2
	62	2
129573-01361	1	31

Parts No. Index

Parts No.	Fig. No.	Ref. No.
129573-07500	5	20
129573-07501	5	20 -1
129573-18000	14	39
129573-18120	15	11
	16	10 -1
129573-21000	17	6
129573-21590	17	15
129573-22000	18	3
129573-22300	18	11
129573-22500	18	22
129573-25060	12	11 -1
129573-25100	12	9 -1
129573-25900	29	80 -1
		80 -2
129573-42500	22	1
129573-42540	22	5
129573-44001	24	33
129573-44111	24	43
129573-44440	24	45
129573-44450	24	49
129573-44470	24	47
129573-44900	24	5 -1
129573-49540	23	12
129573-51300	29	24
	30	24
129573-51330	29	27
	30	27
129573-51340	29	28
	30	28
129573-51370	29	31
	30	31
129573-53000	32	8
	61	20 D
129573-53500	32	8 -1
	33	3 -1
	61	20 D-1
129573-61700	37	50 -1
129573-67300	52	2 -1
129573-77920	53	2 -1
129573-77930	53	2 -2
	54	2 -1
129573-77931	53	2 -3
	54	2 -2
129573-77932	53	2 -4
	54	2 -3
129573-77950	57	22
	58	49
	59	52
	60	24
129573-77951	57	22 -1

Parts No.	Fig. No.	Ref. No.
129573-77951	58	49 -1
	59	52 -1
	60	24 -1
129573-77960	57	23
	58	50
	59	53
	60	25
129574-01520	2	23
129574-07500	5	21
129574-07501	5	21 -1
129574-08100	6	10
129574-18000	14	40
129574-21590	17	15 C-2
129574-25900	31	13
129574-25920	31	14
129574-51070	31	2
129574-51250	31	3
129574-51900	31	2 -1
129574-51901	31	2 -2
129574-54030	31	4
129574-54031	31	4 -1
129574-54090	31	5
129574-55651	36	2
129574-55700	36	6
129574-55710	36	5
	61	27
129574-55730	36	4
129574-55780	36	4 A
129574-55800	36	3
129574-59810	33	23
129574-59820	33	27
129574-59830	33	31
129574-59840	33	35
129574-59990	36	22
129574-67100	40	21
129574-77700	93	37
	94	42
	95	47
129574-77710	44	18 -2
	93	38
	94	43
	95	48
129574-77710-1	44	18 -3
129574-77720	44	17 -1
	93	39
	94	44
	95	49
129574-77720-1	44	17 -2
129574-77820	44	21
129574-77850	93	42

Parts No.	Fig. No.	Ref. No.
129574-77850	94	45
	95	50
129574-77860	93	43
	94	46
	95	51
129574-77910	44	1
129574-77911	44	1 -1
129574-91130	93	1
129574-91160	94	1
129574-91190	95	1
129574-91200	93	2
	94	2
	95	2
129574-91210	94	5
	95	5
129574-91220	94	6
	95	6
129574-91240	95	10
129574-91260	95	8
129574-91410	93	9
	94	12
	95	15
129574-91420	93	20
	94	22
	95	26
129574-91430	94	25
	95	29
129574-91440	94	28
	95	32
129574-91490	95	12
129574-91530	93	53
	94	54
	95	54
129574-91540	93	54
	94	55
	95	55
129574-91550	93	55
	94	56
	95	56
129574-91600	95	38
129574-91620	93	19
	94	21
	95	25
129574-91630	94	24
	95	28
129574-91640	94	27
	95	31
129574-91650	93	29
	94	34
	95	39

Parts No.	Fig. No.	Ref. No.
129574-91710	93	26
	94	31
	95	35
129574-91720	93	21
	94	23
	95	27
129574-91730	94	26
	95	30
129574-91740	94	29
	95	33
129574-91750	93	27
	94	32
	95	36
129574-91770	93	28
	94	33
	95	37
129574-91780	93	14
	94	17
	95	20
129574-91790	93	15
	94	18
	95	21
129574-91850	95	43
129574-91860	95	9
129574-91870	93	3
	94	3
	95	3
129574-91880	95	13
129574-91890	95	22
129574-91900	93	46
129574-91930	95	24
129574-91950	93	47
129574-91960	93	48
	94	49
	95	59
129574-91970	93	49
	94	50
	95	60
129590-18520	10	12
	11	14
129590-59200	20	23
	44	22
	53	12
	54	15
129590-67101	40	1
129590-67110	40	16
129590-67140	40	18
129590-67310	39	1
129590-67420	39	9
129595-18130	16	11

Parts No. Index

Parts No.	Fig. No.	Ref. No.
129595-18131	15	12
	16	11 -1
129595-18140	16	33
129595-18141	10	11
	15	14
	16	33 -1
129595-18150	16	34
129595-18151	15	16
	16	34 -1
129595-18160	15	17
	16	30
129595-53000	32	11
	33	3
	61	20 B
129595-61011	37	3
129595-61012	37	3 -1
129595-61050	37	4
129595-61080	37	7
129595-61200	37	15
	38	9
129595-61500	37	29
129595-61600	37	41
129595-61610	37	42
129595-61620	37	43
129595-61631	37	44
129595-61660	37	46
129595-61670	37	47
129595-61680	37	48
129595-61691	37	49
129595-61801	37	51
129595-61802	37	51 -1
129595-61820	37	55
129595-61821	37	55 -1
129595-61901	37	58
129595-61911	37	59
129595-61931	37	61
129595-61951	37	62
129595-61961	37	63
129595-67310	39	8
129772-77200	42	1
129772-77500	57	18
129792-13520	48	4
	61	6
129792-13552	13	2
129792-18090	14	31
	61	7
	62	11
129792-39610	21	24
129795-01780	3	3
129795-01800	2	9

Parts No.	Fig. No.	Ref. No.
129795-01950	1	24
	2	12
129795-02411	1	23
129795-11120	7	16
129795-11180	7	17
129795-21661	17	12
129795-42670	22	7
129795-49550	23	13
	61	17
129C26-01890	2	11 -3
	62	6 -3
135210-39140	21	17
135665-07210	5	3
138603-59380	51	4
144626-91560	44	15
	54	7
144626-91570	44	16
	54	8
145410-46190	22	8
157854-04300	58	12
171007-49400	14	34
171008-77010	41	1
171008-77400	41	2
171008-77410	41	3
171008-77420	41	4
171008-77440	41	6
171008-77450	41	7
171008-77460	41	8
171008-77470	41	9
171008-77480	41	10
171008-77490	41	11
171008-77500	41	12
171008-77510	41	13
171008-77520	41	14
171008-77530	41	15
171008-77540	41	16
171008-77570	41	19
171008-77571	41	19 -1
171008-77640	41	26
171008-77650	41	27
171008-77660	41	28
171008-77670	41	29
171008-77720	41	33
171008-77730	41	34
171008-77740	41	35
171008-77750	41	36
171051-01921	1	5
171078-66551	52	1
174307-51170	29	13
	30	13

Parts No.	Fig. No.	Ref. No.
174307-51560	29	44
	30	44
174307-51700	37	30
	38	32
177040-03080	90	21
177070-02012	88	1
177070-02080	88	7
177070-03011	89	3
177070-03031	89	2
177070-03041	90	1
177070-03071	90	2
177070-03112	90	4
		6
177070-03131	90	3
177070-03190	90	7
177070-03200	90	8
177070-03231	90	9
177070-03250	90	10
177070-03302	89	5
177070-03520	89	4
177070-03651	90	23
177070-03660	90	24
177070-03670	90	25
177070-03681	90	26
177070-03691	90	27
177070-03700	90	28
177070-03741	90	32
177070-03750	90	33
177070-06610	91	16
177070-09030	92	15
177073-03191	63	18
	64	1
	89	10
177073-03340	90	12
177075-02550	5	2
177088-02120	88	2
177088-02300	88	9
177088-02350	88	6
177088-02430	5	1
177088-02451	88	10
177088-02950	88	12
177088-02961	88	13
177088-03272	90	11
177088-03280	90	16
177088-03290	90	15
177088-03311	89	6
177088-03331	89	7
177088-03341	89	8
177088-03400	89	1
177088-03540	90	17

Parts No.	Fig. No.	Ref. No.
177088-06340	91	1
177088-06360	91	5
177088-06370	91	6
177088-06380	91	7
177088-06390	91	12
177088-06400	91	13
177088-09010	92	1
177088-09020	92	2
177088-09030	92	3
177088-09040	92	4
177088-09050	92	5
177088-09060	92	6
177088-09070	92	7
177088-09080	92	8
177088-09090	92	9
177088-09150	92	14
177090-03090	90	22
194151-55820	57	11
194440-51620	28	10
194555-62750	44	23
	53	13
	54	16
196322-06610	91	3
22113-060000	43	4
22117-040000	37	66
	38	61
22117-060000	37	67
22117-080000	52	5
22137-080000	13	3
	15	28
	16	36
	42	23
	44	4
	47	23
	53	10
	54	13
22137-100000	42	24
		24 -1
	47	24
		24 -1
22190-080000	37	68
	90	34
22190-100000	37	69
	38	62
22217-050000	40	7
	43	5
	57	7
	91	17
22217-060000	29	56
	30	56

Parts No. Index

Parts No.	Fig. No.	Ref. No.
22217-060000	52	6
22217-080000	4	16
	15	7
	16	9 A
	20	6
	23	6
	32	36
	40	8
	43	6
	44	5
	53	9
	54	12
	73	4
22217-100000	4	17
22217-120000	29	81
		81 -1
22217-140000	31	16
22242-000100	40	6
		26
22242-000320	34	19
22252-000280	18	12
22252-000420	22	9
22272-000040	37	39
	38	63
22272-000060	37	70
	38	64
22287-060000	37	71
22287-120000	37	72
	38	65
22312-080160	1	25
	17	18
22312-100160	88	5
22351-020012	91	4
22351-030010	1	27
22351-030016	38	66
22351-050010	29	57
	30	57
22351-060012	1	26
	7	43
22360-040000	37	73
22360-050000	38	67
22360-080000	52	7
22372-040000	37	73 -1
	38	67 -1
22372-060000	37	74
22414-160100	43	7
22414-250150	39	2
	40	9
22417-160120	92	12
22487-060240	92	11

Parts No.	Fig. No.	Ref. No.
22512-070140	12	6
	17	4
		9
22512-070160	17	20
22717-410160	58	10
	59	6
		6 -1
22724-800380	41	42
23000-013000	10	16
	11	17
	28	11
23000-016000	8	18
23000-022000	25	5
	26	9
	27	8
	63	10
23000-025000	8	19
	21	28
	28	12
23000-035000	25	6
	26	10
	27	9
	63	11
23000-041000	28	13
	50	13
23000-054000	9	14
	10	17
	11	10
23000-060000	10	18
	15	29
	16	24
23000-070000	15	30
	16	25
23010-013000	46	6
23010-014000	51	5
23010-017000	24	66
23061-070300	1	34
	14	36
	15	31
	16	26
	24	28
	26	11
	27	10
23061-120300	24	67
23072-040300	25	7
	26	12
	27	11
	63	12
23072-040350	26	13
	63	13

Parts No.	Fig. No.	Ref. No.
23072-101000	50	12
23080-013000	35	6
		23
	36	16
23297-160081	8	20
23341-150000	21	6
		9
		12
23414-050000	37	75
	38	68
23414-080000	2	13
	35	24
	40	10
23414-100000	9	15
	10	19
	11	11
	21	29
	88	16
23414-100014	38	69
23414-120000	1	12
	35	7
		25
	36	17
		23
23414-130000	15	8
	16	7
23414-140000	35	26
23414-160000	4	18
23414-160021	4	9
23414-170000	24	17
		31
		37
23414-180000	20	18
23414-200000	21	30
23414-240031	34	21
23857-030000	1	38
23857-060000	35	8
23857-150000	21	31
23871-010000	1	6
	9	8
	15	20
	16	16
23871-020000	20	12
23871-030000	1	7
	4	11
	7	10
	24	10
23887-100002	37	76
	38	70
	88	15

Parts No.	Fig. No.	Ref. No.
23887-120002	1	13
23887-160002	4	10
23893-030002	24	18
		32
		38
23894-020002	15	9
	16	8
24101-062024	22	11
24101-063024	22	10
24141-302050	90	14
24311-000060	50	11
24311-000080	37	77
24311-000110	37	78
24311-000120	8	15
24311-000150	22	13
24311-000180	88	11
24311-000210	90	13
24311-000320	2	14
	8	13
24311-000340	90	35
24311-240100	37	77 -1
	38	71
24314-000180	21	32
24321-000400	88	3
24321-000750	19	13
		23
	24	56
	63	14
24321-000800	24	57
24341-000120	89	9
24341-000160	29	58
	30	58
24341-000260	2	15
24341-000500	8	9
	31	6
24341-000600	22	15
	61	25
24341-001050	90	36
24421-203508	22	12
24421-284008	88	14
25132-004600	23	7
	61	26
26013-080302	16	9
26016-080252	88	8
26016-080302	88	4
26022-050102	29	62
	30	62
	37	79
	38	72
26022-050122	40	28

Parts No. Index

Parts No.	Fig. No.	Ref. No.
26022-060122	37	40
	38	48
26022-060162	29	3
	30	3
26106-060102	23	8
	52	8
	57	24
	58	51
	59	54
	60	26
26106-060162	2	16
	21	33
	37	83 -1
	43	8
26106-060182	37	80
26106-060202	21	34
	32	37
	33	39
	37	81
	38	73
	52	9
26106-060322	41	37
26106-060402	41	38
26106-080102	35	27
26106-080122	2	17
	4	22
	40	11
		19
	52	10
26106-080142	7	51
	19	27
	20	7
	24	55
	44	24
	53	14
	54	17
26106-080162	1	36
	2	24
	4	19
	7	52
	19	28
	22	18
	24	68
	26	14
	27	12
	44	6
	53	7
	54	9
	63	15
	64	6

Parts No.	Fig. No.	Ref. No.
26106-080162	64	7
	73	5
		6
	80	3
	87	3
	89	11
26106-080182	31	15
26106-080202	8	10
	9	16
		17
	10	20
	11	12
	15	32
		33
	16	27
		28
	20	21
	32	38
26106-080252	4	4
		5
		6
	7	44
	19	14
		24
		29
	23	16
	24	58
	40	12
	42	25
	47	25
	91	14
26106-080352	20	8
	23	18
	48	8
26106-080402	4	7
	8	11
	9	22
	10	21
	15	41
	16	40
26106-080452	2	18
	12	12
	90	5
26106-080502	7	45
	15	34
	16	29
	23	17
26106-080552	2	19
	20	22
	23	9

Parts No.	Fig. No.	Ref. No.
26106-080552	36	9
26106-080602	23	10
26106-080652	23	11
	31	7
26106-080802	15	35
	16	35
26106-080852	2	20
26106-080952	15	42
	16	41
26106-081002	24	59
26106-100122	9	18
	11	18
26106-100162	31	8
	57	25 -1
	58	52 -1
	59	55 -1
	60	27 -1
26106-100202	6	5
26106-100222	90	19
26106-100252	4	8
		20
	31	9
	57	25
	58	52
	59	55
	60	27
26106-100302	3	4
	35	31
	64	8
	73	7
	80	4
	87	4
26106-100322	55	7
		8
26106-101152	42	26
	47	26
26116-050142	39	3
		10
26116-050202	39	11
26116-050302	29	60
	30	60
26116-080302	50	14
26116-101202	42	26 -1
	47	26 -1
26116-120302	6	6
	41	40
26203-060102	22	16
26216-060202	7	13
26216-080182	2	21
26216-080222	7	22

Parts No.	Fig. No.	Ref. No.
26216-080282	31	10
26216-081002	7	23
26216-100552	36	10
26226-080182	7	41
26226-080502	15	36
	16	31
26226-100222	64	9
	73	8
	80	5
26366-060002	32	39
	33	40
26366-080002	2	22
	4	21
	7	25
		26
	8	5
	9	19
	10	22
	11	13
	15	10
		37
	16	32
	22	19
	24	60
	31	11
		12
	37	82
	38	74
	40	13
	43	9
26366-100002	36	11
26367-060002	7	24
26450-060252	20	26
26450-080302	90	20
26450-120402	55	3
26476-060142	9	4
	10	4
	11	4
26556-060122	93	51
	94	52
	95	62
26557-050082	43	10
26557-050122	40	14
26557-050162	91	18
26557-060162	37	83
26559-060122	93	50
	94	51
	95	61
26646-040352	92	13
26664-080002	50	7

Parts No. Index

Parts No.	Fig. No.	Ref. No.
26667-080002	37	84
26703-080002	13	4
	14	37
	48	9
	50	15
26706-100002	55	9
		10
26716-050002	40	15
	57	6
	91	19
26716-060002	29	38
	30	38
	93	52
	94	53
	95	63
26716-080002	44	25
	53	15
	54	18
26716-100002	36	12
	42	27
	47	27
	64	10
	73	9
	80	6
26716-120002	29	82
		82 -1
	45	11
26736-100002	92	10
26756-050002	39	4
		12
26756-060002	21	35
	37	85
	38	75
26756-080002	7	42
	37	86
	55	11
		12
26776-120002	37	87
	38	76
26776-140002	31	17
27225-100140	1	8
27231-500000	1	9
27241-100000	7	33
27241-120000	1	10
27241-220000	7	11
27241-280000	24	11
		29
		39
27241-300000	1	11
27241-400000	7	12

Parts No.	Fig. No.	Ref. No.
27241-400000	24	12
		30
		40
28110-100130	45	4
28110-120140	45	5
28110-170190	45	6
28110-220240	45	7
41701-001720	40	20
41710-000380	56	4
41710-000410	40	17
	43	11
	91	20
41710-001300	39	13
	91	15
41730-000680	56	2
43400-500390	37	75 -1
	38	68 -1
43400-500410	21	36
43400-500430	37	69 -1
	38	62 -1
43400-500450	37	88
43400-500490	29	59
	30	59
43530-500570	25	8
	26	16
	27	13
43600-500310	24	13
		61
43662-025030	25	9
	26	17
	27	14
43720-001220	20	28
45511-501250	36	13
46150-003610	58	30
	59	30
		30 -1
	60	11
46150-003620	60	14
46150-504360	44	30
48110-028070	55	13
48110-030061	55	14
48110-032065	55	15
48110-032411	55	16
		17
48110-034071	55	18
704507-92100	45	1
711100-51540	29	16 A
	30	16 A
729150-11650	7	37
729150-23600	18	17

Parts No.	Fig. No.	Ref. No.
729402-11650	7	37 -1
729470-11520	8	1
729470-44501	24	3
729473-11700	7	1 A
729473-44501	24	4
729474-11701	7	1 B
729499-54100	34	1
729570-51350	30	1
729570-53100	32	1
729570-53200	32	1 -1
729570-82790	63	1
729570-92500	61	1 A
729570-92510	61	1 F
729571-51300	29	1 A
729571-82790	63	1 A
729571-92500	61	1 B
729572-51300	29	1 B
729572-82790	63	1 B
729572-92510	61	1 G
729573-01560	1	1
729573-22500	18	7
	61	8
729573-22540	18	26
729573-23700	18	13
729573-44501	24	5
729573-51300	29	1 C
729573-53050	32	2 -1
	33	1 -1
729573-53100	32	2
729573-82790	63	1 C
729573-92500	61	1 D
729573-92510	61	1 H
729573-92600	62	1
729573-92601	62	1 -1
729574-11700	7	1 C
729574-92500	61	1 E
729574-92510	61	1 I
729595-53100	32	3
	33	1
83213-003012	51	7
919400-02500	50	1
947859-20010	49	12
977770-01212	62	17
977782-00121	49	1
X3916003482	15	10 A
X6201NC	47	18
X6201SD	42	3
X6203BM	42	16
X6303BM	47	14
XBP1901300	49	3

Parts No.	Fig. No.	Ref. No.
XBP1901820	49	7
XBP1901830	49	8
XBP1901910	49	9
XBP1901920	49	10
XBP1901950	49	11
XBP1902200	49	2 -1
XBP1902400	49	4
XBP1902810	49	6
XBP1905500	49	5
XBP2901200	49	2
XL12013262	42	9
XL13513134	42	12
XL15014042	42	15
XL15018015	42	18
XL1501810	42	19
	47	17
XL15028001	42	20
	47	19
XL150M14041	47	13
XL15542001	42	4
XL15553002	42	5
XL1556315	42	7
	47	6
XL15571001	42	2
XL1801200	47	3
XL1801335	47	8
XL18018015	47	16
XL1805100	47	2
XL1805301	47	5
XL1805500	47	15
XL1808320	47	10
XL1809300	47	4
XL2251318	42	11
	47	11
XL2253320	42	13
XL2253400	42	14
XL22553012	42	6
XL2255320	47	7
XL2255330	42	8
XL22555001	42	17
XL23534011	47	12
XN131108	14	29 G
		70
XNB131008	14	26
		29 E
		44
		68
XNB133206	14	21
		56 A
XNB133208	14	23

Parts No. Index

Parts No.	Fig. No.	Ref. No.
XNB133208	14	56 B
XNB134007	14	11
		50
XNB134035	14	12
XNE923300	14	16 A
XNE923301	14	16
		55 A
XNE923383	14	55
XNE924350	14	10
XNE924560	14	49 A
XNE928722	14	52
XNE929000	14	52 B
XNE929010	14	13 A
		52 A
XNE929040	14	13
XNN131004	14	5
XNN131005	14	6
XNN131008	14	25
		29 D
		45
		67
XNN131106	14	7
XNN131108	14	8
		47
XNN131500	14	4
XNN131502	14	4 A
		41 B
XNN131536	14	29 F
		46
		69
XNN131570	14	29
		63
XNN131578	14	29 B
		42
		65
XNN131579	14	29 C
		43
		66
XNN131614	14	41
XNN133001	14	18
XNN133021	14	57
XNN133204	14	17
XNN133207	14	23 A
XNN133208	14	17 -1
		56
XNN133382	14	55 B
XNN133442	14	16 B
XNN133504	14	19
XNN133505	14	20
XNN133506	14	58

Parts No.	Fig. No.	Ref. No.
XNN133596	14	59
XNN133911	14	49
XNN134035	14	12 A
		51
XNN134092	14	10 A
XNN136606	14	9 A
XNN136607	14	9
XNN136610	14	48 A
XNN136613	14	48
XNN137007	14	14
		14 D
		53
XNN137055	14	14 B
		24
		62
XNN137423	14	14 A
		15 A
		54
XNN139400	14	13 B
XNN193653	14	27
XNN193655	14	28
XNN196103	14	14 C
XNN197404	14	15
XNN977006	14	21 A
XNN977007	14	22
XTR1Z63	42	10
	47	9
XTST25S001	50	2
XTST25S002	50	3
XTST25S003	50	4
XTST25S004	50	5
XTST25S005	50	6
XTST25S007	50	8
XTST25S008	50	9
XTST25S009	50	10

Parts No.	Fig. No.	Ref. No.

Parts No.	Fig. No.	Ref. No.