YANMAR

PARTS CATALOG

0CR10-M56101EN

Last update Nov., 2016

Introduction

1.This parts catalog for 3JH4E is published as a revised edition of the Diesel engine.

	Date of issue	Remarks
First edition	July, 2003	No need
1st edition(supplement)	Apr., 2014	

2.Standard finish color. Yanmar ecole silver metallic
Parts No. 977620-40071 4L(Packed in a can)
Parts No. TOR-94800250 Spray(1 piece)

3.This parts catalog does not contain the technical data needed for maintenance service.

4.The illustrations used in this parts catalog have been simplified for clarity.

5.The contents of this parts catalog are subject to change without notice.

6.Be sure to use only Yanmar genuine parts for repairs.If imitation parts are used, it may cause engine defects.

Contents

0CR10-M56101

Fig. No.	Fig. Name
3JH4E	
1.	CYLINDER BLOCK
2.	GEAR HOUSING
3.	FLYWHEEL HOUSING
4.	MOUNTING FOOT
5.	OIL SUMP
6.	LABEL
7.	CYLINDER HEAD
8.	BONNET
9.	SUCTION MANIFOLD
10.	MIXING ELBOW
11.	CAMSHAFT
12.	CRANKSHAFT & FLYWHEEL
13.	PISTON & CONNECTING ROD
14.	LUB. OIL SYSTEM
15.	LUB. OIL PIPE
16.	COOLING SEA WATER PUMP
17.	COOLING SEA WATER PUMP(OPTIONAL)
18.	COOLING FRESH WATER PUMP
19.	COOLING FRESH WATER COOLER
20.	COOLING SEA WATER PIPE
47.	(20A)COOLING SEA WATER PIPE(REAR PUMP SPEC.:OPTIONAL)
21.	COOLING FRESH WATER PIPE
22.	COOLING SEA WATER STRAINER(OPTIONAL)
23.	BILGE PUMP(STD)(OPTIONAL)
24.	BILGE PUMP(DX)(OPTIONAL)
48.	(24A)BILGE PUMP(OPTIONAL)
25.	FUEL INJECTION PUMP
26.	GOVERNOR
27.	FUEL FEED PUMP
28.	FUEL INJECTION VALVE
29.	FUEL INJECTION PIPE
30.	FUEL PIPE & FUEL STRAINER
31.	FUEL TANK(OPTIONAL)
32.	CABLE SUPPORT
33.	CLUTCH
34.	COUPLING(OPTIONAL)
35.	STARTING MOTOR
36.	GENERATOR(12V-60A)
37.	GENERATOR(12V-80A)
38.	V-BELT COVER & GENERATOR ATTACHIMENT
39.	WIRE HARNESS & SENSOR
40.	INSTRUMENT PANEL(B-TYPE)(OPTIONAL)
41.	INSTRUMENT PANEL(C-TYPE)(OPTIONAL)
45.	(41A)INSTRUMENT PANEL(B-TYPE:KEYLES)(OPTIONAL)
46.	(41B)INSTRUMENT PANEL(C-TYPE:KEYLES)(OPTIONAL)
42.	TOOLS
43.	GASKET SET(OPTIONAL)
44.	GENERATOR(ADDITION) & GENERATOR MOUNT PART(OPTIONAL)
49.	SPARE PARTS KIT(OPTIONAL)

Fig.1. CYLINDER BLOCK

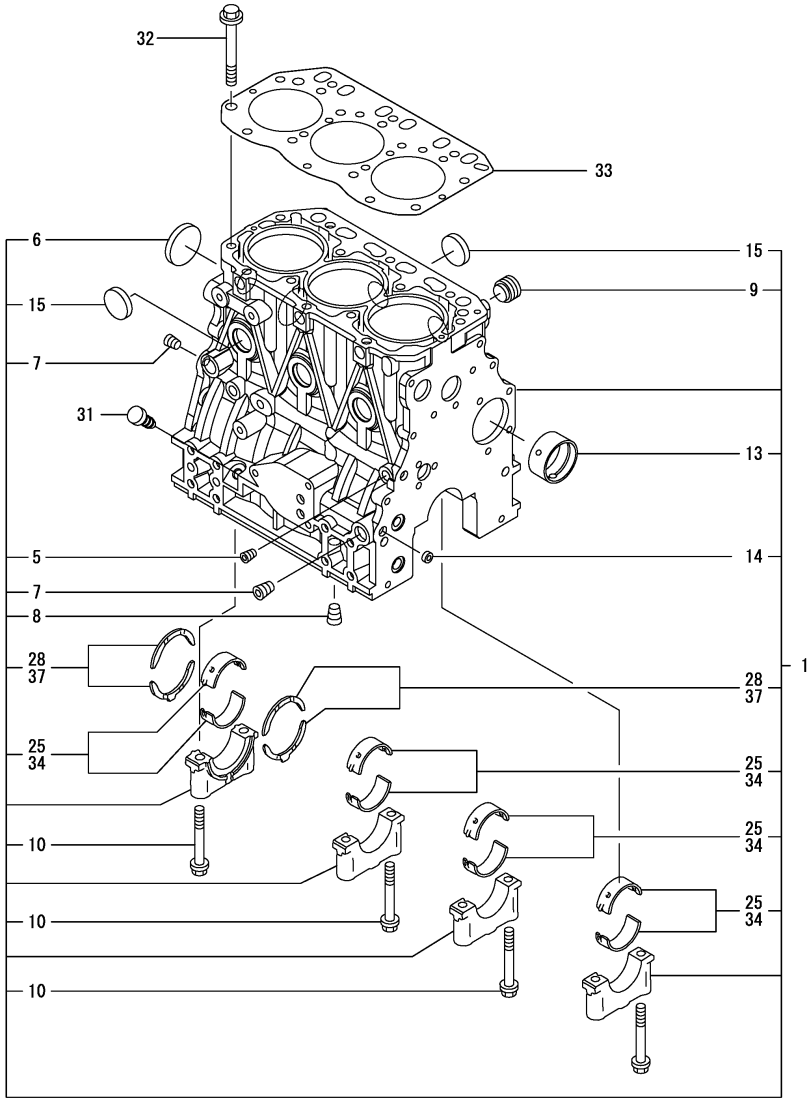

(A)=3JH4E (D)=
(B)= (E)=
(C)= (F)=

No.	Lev.	Parts No.	Description	Q'ty (A)	(B)	(C)	(D)	(E)	(F)	I	R
1	1	729005-01560	BLOCK ASSY, CYLINDER	1							
5	2	124060-01050	PLUG, PT1/8	1							
6	2	129001-01250	PLUG, 50	1							
7	2	124160-01910	PLUG, PT1/4	2							
8	2	124160-01910	PLUG, PT1/4	1							
9	2	171051-01921	PLUG, NPTF1	1							
10	2	129150-02020	BOLT, METAL CAP	8							
13	2	129795-02411	BUSH, CAMSHAFT	1							
13-1	2	129795-02412	BUSH, CAMSHAFT	1						N	
	(A=E03798)										
14	2	27241-120000	PLUG, 12	2							
15	2	27241-300000	PLUG 30	6							
25	2	129001-02930	BEARING, MAIN	4							3
25-1	2	129001-02931	BEARING, MAIN	4						N	3
	(A=E04680)										
28	2	129150-02930	BEARING, THRUST	2							
28-1	2	129150-02931	BEARING, THRUST	2						N	
	(A=E04680)										
31	1	124976-34850	CAP	1							
32	1	129150-01200	BOLT, HEAD	14							
33	1	129001-01340	GASKET, HEAD	1							
34	1	129150-02870	BEARING, 0.25 US	4							1
37	1	129150-02940	BEARING, THRUST 0.25	1							2

Remarks
(1)Under-sized (U.S.=0.25) parts.
(2)Over-sized (O.S.=0.25) parts.
(3)Spare parts.

N:Old $\frac{\text{Yes}}{\text{No}}$ New, Q:Old $\frac{\text{No}}{\text{Yes}}$ New, R:Old $\frac{\text{Yes}}{\text{Yes}}$ New, S:Old $\frac{\text{No}}{\text{No}}$ New, W:Add, Z:Discontinued, F:Interchangeable by set, K:Q'ty Change

Copyright (C) 2014 YANMAR CO., LTD. All RightsReserved.

Fig.2. GEAR HOUSING

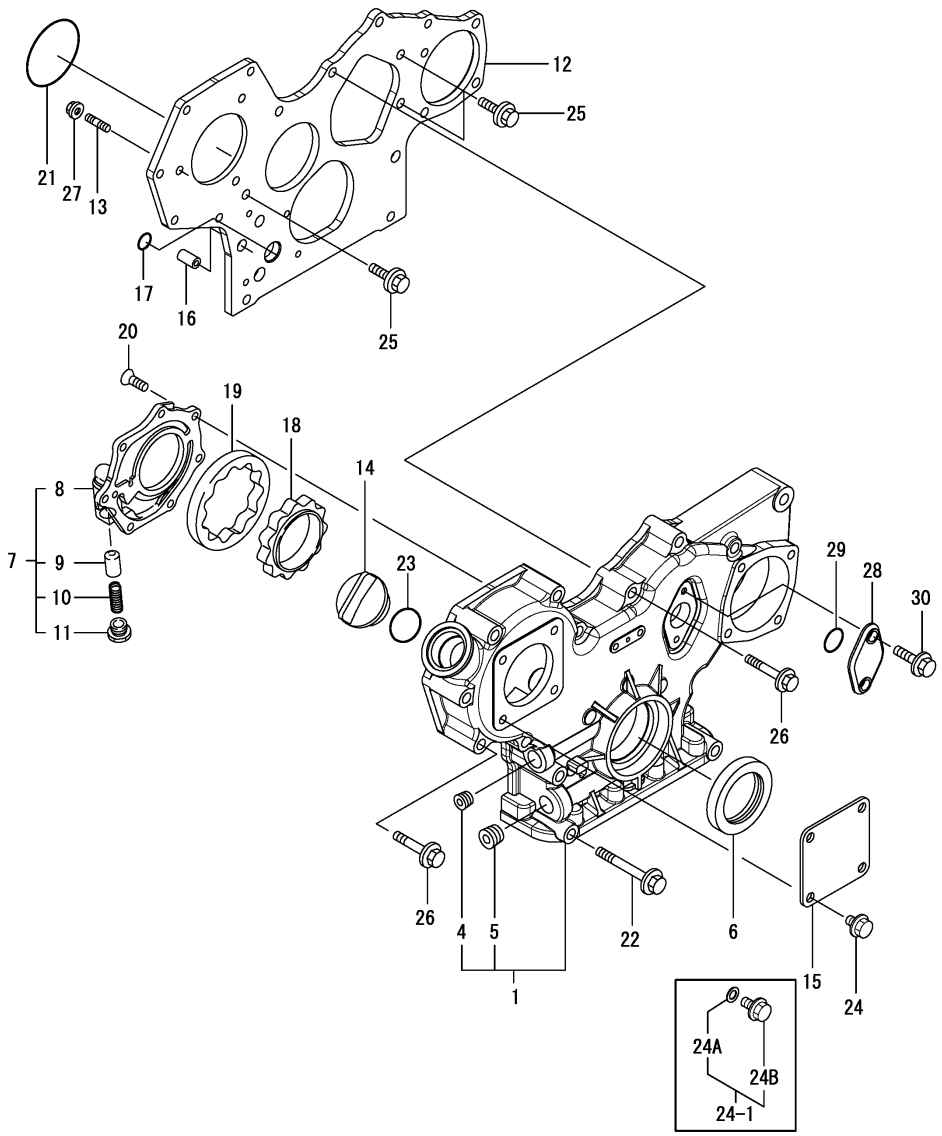

(A)=3JH4E (D)=
(B)= (E)=
(C)= (F)=

No.	Lev.	Parts No.	Description	Q'ty (A)	(B)	(C)	(D)	(E)	(F)	I	R
1	1	129271-01500	COVER, GEAR CASE	1							
4	2	23876-030000	PLUG, R03	1							
5	2	23876-040000	PLUG, R04	1							
6	1	129795-01800	SEAL, OIL	1							
7	1	119802-32100	COVER ASSY	1							
8	2	119802-32070	COVER	1							
9	2	129900-32130	VALVE, RELIEF	1							
10	2	129418-32320	SPRING	1							
11	2	129001-32330	PLUG	1							
12	1	129004-01520	FLANGE, GEAR CASE	1							
13	1	119802-01560	STUD, M8X25	3							
13-1	1	119802-01561	STUD, M8X25	1							R
	(A=E02694)										
14	1	124160-01751	COVER, FILLER	1							
15	1	124240-01871	COVER	1							
16	1	129795-01950	PIPE, KNOCK L=18	2							
17	1	119609-32040	O-RING, P16	4							
18	1	129508-32111	ROTOR, INNER	1							
19	1	129508-32120	ROTOR, OUTER	1							
20	1	119802-32130	SCREW, M6X16	7							
21	1	121850-51960	O-RING	1							
22	1	129001-91841	BOLT, M8X85	3							
22-1	1	26106-080852	BOLT, M8X 85 PLATED	3							R
	(A=*2008.12)										
23	1	24311-000320	O-RING, 1AP32.0	1							
24	1	26106-080162	BOLT, M8X 16 PLATED	4							
24-1	1	124550-01590	BOLT, M8X16	4							R
	(A=E02694)										
24A	2	22190-080002	WASHER, SEAL 8	4							W
	(A=E02694)										
24B	2	26106-080162	BOLT, M8X 16 PLATED	4							W
	(A=E02694)										
25	1	26106-080162	BOLT, M8X 16 PLATED	3							
26	1	26106-080552	BOLT, M8X 55 PLATED	11							
27	1	26306-080002	NUT, M8	3							
28	1	121023-01550	COVER	1							
28-1	1	121023-01551	COVER	1							R
	(A=E03146)										
29	1	24341-000240	O-RING, 1AS24.0	1							
30	1	26106-060162	BOLT, M6X 16 PLATED	2							

N:Old $\xleftrightarrow[\text{No}]{\text{Yes}}$ New, Q:Old $\xleftrightarrow[\text{Yes}]{\text{No}}$ New, R:Old $\xleftrightarrow[\text{Yes}]{\text{Yes}}$ New, S:Old $\xleftrightarrow[\text{No}]{\text{No}}$ New, W:Add, Z:Discontinued, F:Interchangeable by set, K:Q'ty Change

Copyright (C) 2014 YANMAR CO., LTD. All RightsReserved.

Fig.3. FLYWHEEL HOUSING

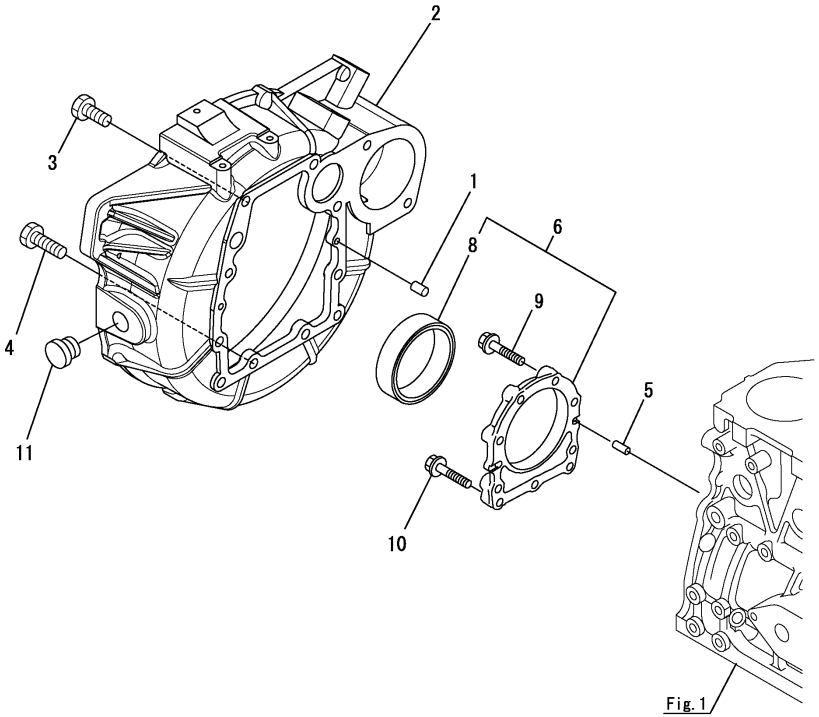

(A)=3JH4E (D)=
(B)= (E)=
(C)= (F)=

No.	Lev.	Parts No.	Description	Q'ty (A)	(B)	(C)	(D)	(E)	(F)	I	R
1	1	129100-01580	PIN, 8X16	2							
2	1	129670-01600	HOUSING, FLYWHEEL	1							
2-1	1	129670-01601	HOUSING, FLYWHEEL	1						R	
	(A=*2013.06)										
3	1	26206-100252	BOLT, M10X 25 PLATED	6							
4	1	26206-100302	BOLT, M10X 30 PLATED	4							
5	1	129100-01580	PIN, 8X16	2							
6	1	129100-01640	CASE ASSY, OIL SEAL	1							
8	2	129795-01780	SEAL, OIL	1							
9	1	129486-01670	BOLT, M8X30	6							
10	1	26106-080352	BOLT, M8X 35 PLATED	3							
11	1	119620-01750	CAP	1						W	
	(A=E06252)										

N:Old $\xleftrightarrow[\text{No}]{\text{Yes}}$ New, Q:Old $\xleftrightarrow[\text{Yes}]{\text{No}}$ New, R:Old $\xleftrightarrow[\text{Yes}]{\text{Yes}}$ New, S:Old $\xleftrightarrow[\text{No}]{\text{No}}$ New, W:Add, Z:Discontinued, F:Interchangeable by set, K:Q'ty Change

Copyright (C) 2014 YANMAR CO., LTD. All RightsReserved.

Fig.4. MOUNTING FOOT

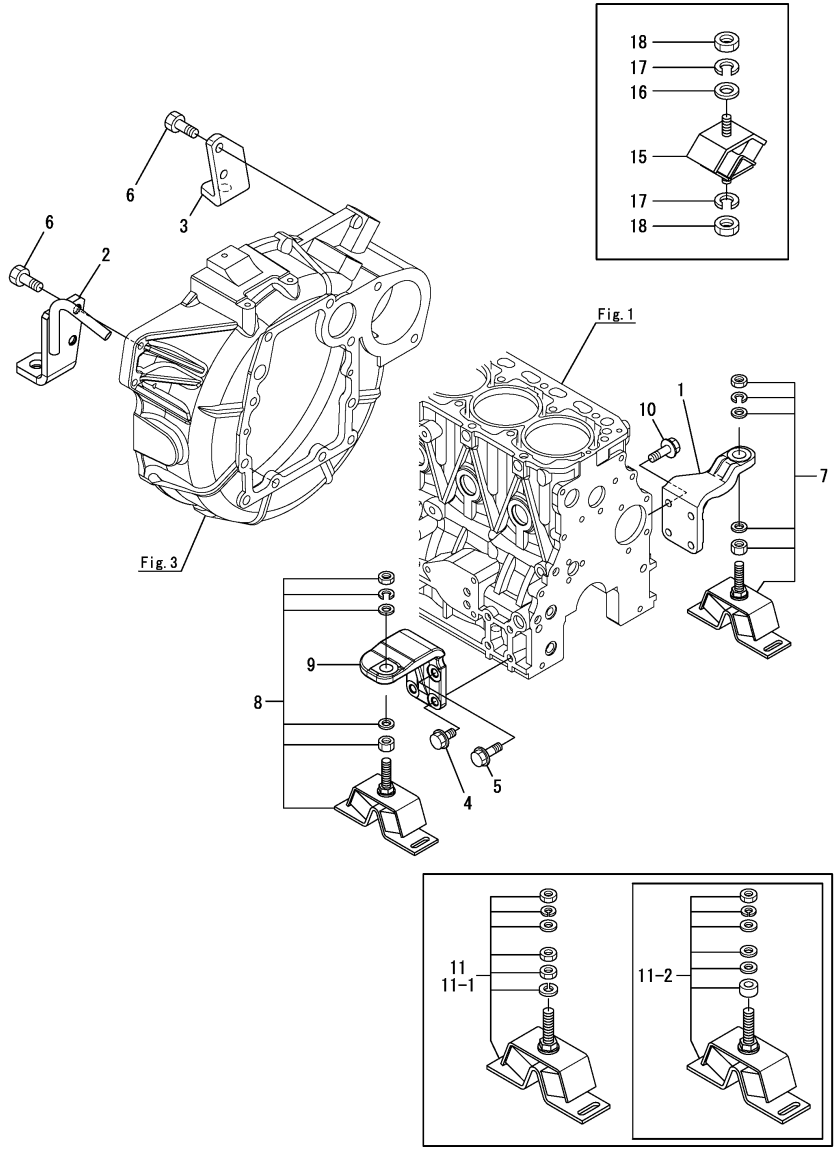

(A)=3JH4E (D)=
(B)= (E)=
(C)= (F)=

No.	Lev.	Parts No.	Description	Q'ty (A)	(B)	(C)	(D)	(E)	(F)	I	R
1	1	129670-08110	FOOT	1							
2	1	129670-08120	FOOT	1							
3	1	129670-08130	FOOT	1							
4	1	26106-100222	BOLT, M10X 22 PLATED	2							
5	1	26106-100302	BOLT, M10X 30 PLATED	2							
6	1	26116-120252	BOLT, M12X 25 PLATED	4							
7	1	129670-08340	MOUNT, FLEXIBLE 150	2							1
7-1	1	129670-08341	MOUNTING, FLEXIBLE	2						R	1
	(A=*2009.03)										
8	1	128377-08350	MOUNT, FLEXIBLE 100	2							1
8-1	1	128377-08351	MOUNTING, FLEXIBLE	2						R	1
	(A=*2009.03)										
9	1	129670-08100	FOOT	1							
10	1	26106-100222	BOLT, M10X 22 PLATED	4							
11	1	129670-08350	MOUNT, FLEXIBLE 200	2							2
11-1	1	129670-08351	MOUNTING, FLEXIBLE	2						R	2
	(A=*2009.03)										
11-2	1	129271-08390	MOUNT ASSY, FLEXIBLE	2						N	2
	(A=*2012.12)										
15	1	196420-02310	ABSORBER, SHOCK 230	1						W	3
	(A=*2005.11)										
16	1	196440-02390	WASHER	1						W	3
	(A=*2005.11)										
17	1	22217-120000	WASHER, SPRING 12	2						W	3
	(A=*2005.11)										
18	1	26716-120002	NUT, M12	2						W	3
	(A=*2005.11)										

Remarks
(1)For KM35A
(2)For SD40
(3)For SD

N:Old $\xleftarrow[\text{No}]{\text{Yes}}$ New, Q:Old $\xleftarrow[\text{Yes}]{\text{No}}$ New, R:Old $\xleftarrow[\text{Yes}]{\text{Yes}}$ New, S:Old $\xleftarrow[\text{No}]{\text{No}}$ New, W:Add, Z:Discontinued, F:Interchangeable by set, K:Q'ty Change

Copyright (C) 2014 YANMAR CO., LTD. All RightsReserved.

Fig.5. OIL SUMP

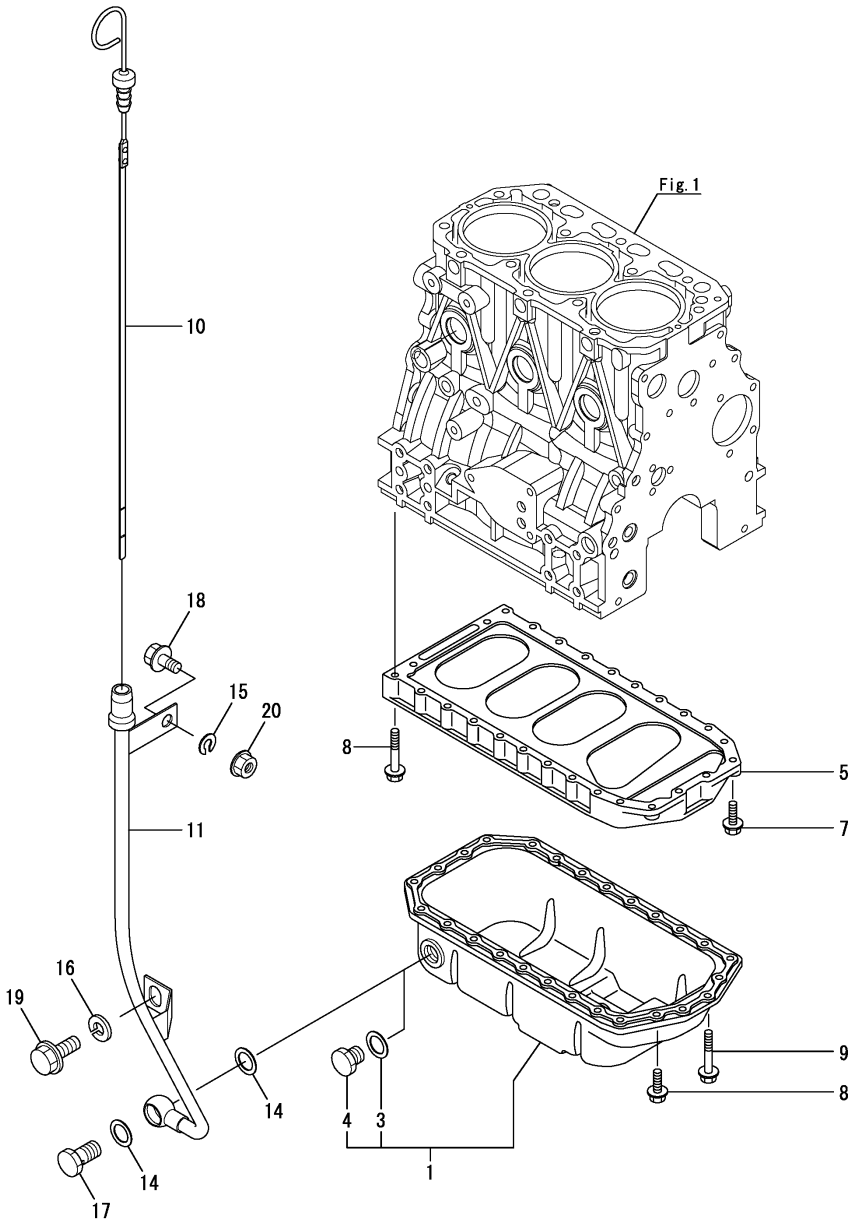

(A)=3JH4E (D)=
(B)= (E)=
(C)= (F)=

No.	Lev.	Parts No.	Description	Q'ty (A)	(B)	(C)	(D)	(E)	(F)	I	R
1	1	129271-01700	SUMP ASSY, OIL	1							
3	2	23414-140000	GASKET, 14X1.0	1							
4	2	23887-140002	PLUG M14	1							
5	1	129100-01730	SPACER, OIL SUMP	1							
7	1	26106-080252	BOLT, M8X 25 PLATED	2							
8	1	26106-080452	BOLT, M8X 45 PLATED	20							
9	1	26106-080162	BOLT, M8X 16 PLATED	4							
10	1	129670-34800	DIPSTICK, OIL	1							
11	1	129271-34880	GUIDE ASSY, DIPSTICK	1							
14	1	22190-140002	WASHER, SEAL 14	2							
15	1	22217-080000	WASHER, SPRING 8	1							
16	1	22217-100000	WASHER, SPRING 10	1							
17	1	23857-080000	BOLT, JOINT 8	1							
18	1	26106-080162	BOLT, M8X 16 PLATED	1							
19	1	26106-100122	BOLT, M10X 12 PLATED	1							
19-1	1	26106-100162	BOLT, M10X 16 PLATED	1						R	
	(A=*2008.01)										
20	1	26366-080002	NUT, M8	1							

N:Old $\xleftarrow[\text{No}]{\text{Yes}}$ New, Q:Old $\xleftarrow[\text{Yes}]{\text{No}}$ New, R:Old $\xleftarrow[\text{Yes}]{\text{Yes}}$ New, S:Old $\xleftarrow[\text{No}]{\text{No}}$ New, W:Add, Z:Discontinued, F:Interchangeable by set, K:Q'ty Change

Copyright (C) 2014 YANMAR CO., LTD. All RightsReserved.

Fig.6. LABEL

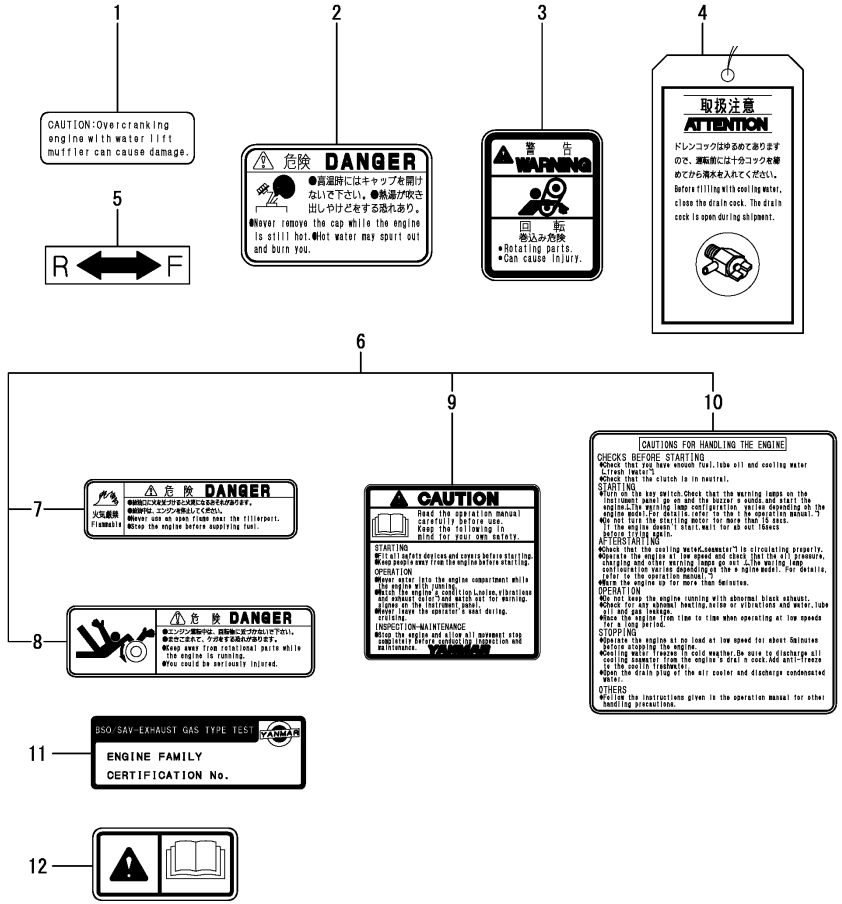

(A)=3JH4E (D)=
(B)= (E)=
(C)= (F)=

No.	Lev.	Parts No.	Description	Q'ty (A)	(B)	(C)	(D)	(E)	(F)	I	R
1	1	128377-07150	LABEL, CAUTION	1							
2	1	128377-07260	LABEL, PRESSURE CAP	1							
3	1	128377-07350	LABEL, CAUTION	1							
4	1	123682-07852	LABEL, CAUTION	1							
5	1	177088-02430	LABEL	1							
6	1	128377-07190	LABEL,LOOSE PARTS	1							
7	2	128377-07400	LABEL,DANGER	2							
8	2	128377-07420	LABEL,DANGER	1							
9	2	128377-07450	LABEL,CAUTION	1							
10	2	128377-07460	LABEL,CAUTION	1							
11	1	129271-07560	LABEL, BSO	1							
12	1	196630-12980	LABEL, CAUTION	1							

N:Old $\overset{\text{Yes}}{\underset{\text{No}}{\leftrightarrows}}$ New, Q:Old $\overset{\text{No}}{\underset{\text{Yes}}{\leftrightarrows}}$ New, R:Old $\overset{\text{Yes}}{\underset{\text{Yes}}{\leftrightarrows}}$ New, S:Old $\overset{\text{No}}{\underset{\text{No}}{\leftrightarrows}}$ New, W:Add, Z:Discontinued, F:Interchangeable by set, K:Q'ty Change

Copyright (C) 2014 YANMAR CO., LTD. All RightsReserved.

Fig.7. CYLINDER HEAD

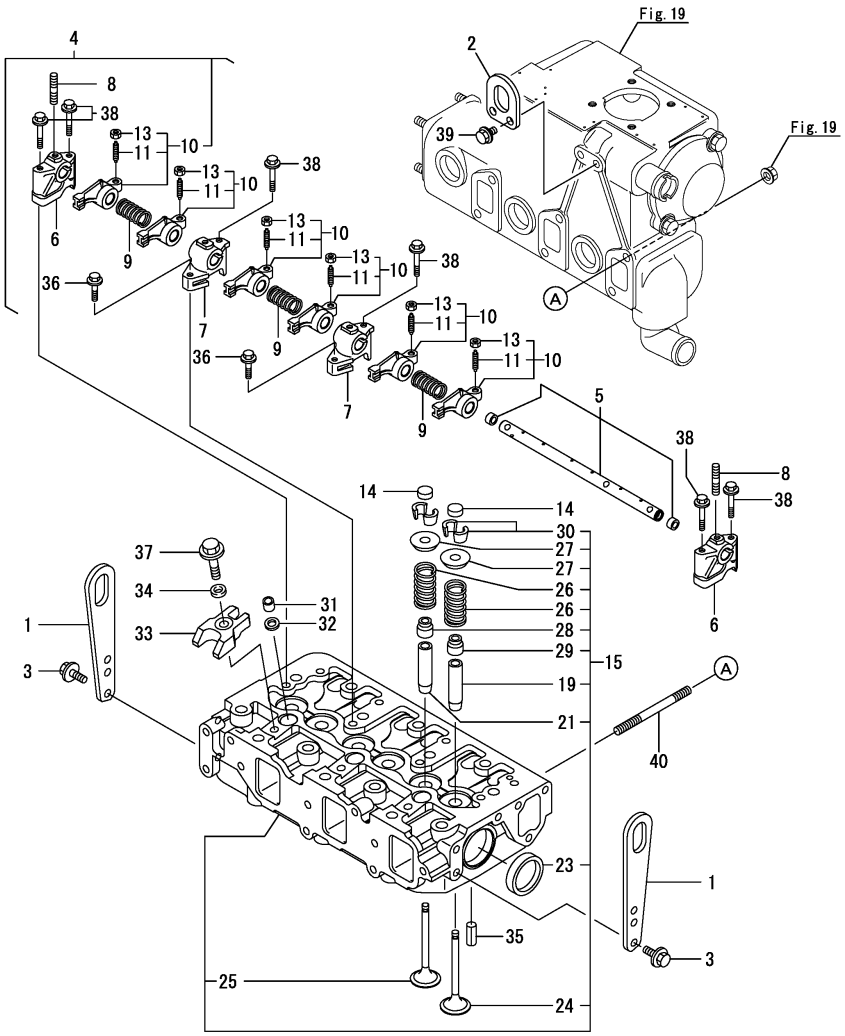

(A)=3JH4E (D)=
(B)= (E)=
(C)= (F)=

No.	Lev.	Parts No.	Description	Q'ty (A)	(B)	(C)	(D)	(E)	(F)	I	R
1	1	129900-07900	LIFTER	2							
2	1	129470-07230	LIFTER	1							
2-1	1	129670-07230	LIFTER	1						R	
	(A=*2007.02)										
2-2	1	129670-07230	LIFTER	1						Z	
	(A=*2007.12)										
3	1	26106-080162	BOLT, M8X 16 PLATED	4							
4	1	129004-11241	SHAFT ASSY, ROCKER	1							
5	2	129004-11251	SHAFT, ROCKER ARM	1							
6	2	119802-11260	SUPPORT, ROCKER ARM	2							
7	2	119802-11270	SUPPORT, ROCKER ARM	2							
8	2	119802-11280	STUD	3							
9	2	129150-11280	SPRING	3							
10	2	129004-11650	ARM, ROCKER	6							
11	3	129150-11230	SCREW, VALVE ADJUST	6							
13	3	129150-11750	NUT, M8	6							
14	1	129150-11370	CAP, VALVE	6							
15	1	129271-11700	HEAD ASSY, CYLINDER	1							
19	2	120130-11860	GUIDE, VALVE	3							1
21	2	129150-11810	GUIDE, VALVE	3							1
23	2	27241-400000	PLUG, 40	2							
24	2	129004-11100	VALVE, INTAKE	3							
24-1	2	129004-11101	VALVE, INTAKE	3						R	
	(A=E02342)										
24-2	2	129004-11130	VALVE, INTAKE	3						R	
	(A=E02856)										
25	2	129100-11110	VALVE, EXHAUST	3							
25-1	2	129100-11111	VALVE, EXHAUST	3						R	
	(A=E02186)										
25-2	2	129100-11112	VALVE, EXHAUST	3						R	
	(A=E02856)										
26	2	129795-11120	SPRING, VALVE	6							
27	2	129795-11180	RETAINER, SPRING	6							
28	2	121400-11340	SEAL, VALVE STEM	3							
29	2	124460-11340	SEAL, VALVE STEM	3							
30	2	27310-080001	COTTER, 8	6							
31	1	119802-11870	PROTECTOR, NOZZLE	3							
32	1	119625-11880	SEAT, NOZZLE	3							
33	1	129004-11900	RETAINER, NOZZLE	3							
34	1	120270-54410	WASHER, INJECTOR	3							
35	1	22351-060012	PIN, SPRING 6.0X12	2							
36	1	26106-080252	BOLT, M8X 25 PLATED	2							
37	1	26106-080352	BOLT, M8X 35 PLATED	3							
38	1	26106-080502	BOLT, M8X 50 PLATED	6							
39	1	26106-080162	BOLT, M8X 16 PLATED	2						Z	
	(A=*2007.12)										
40	1	129693-44300	STUD	2						W	
	(A=E00409)										

Remarks
(1)Spare parts.

N:Old $\frac{\text{Yes}}{\text{No}}$ New, Q:Old $\frac{\text{No}}{\text{Yes}}$ New, R:Old $\frac{\text{Yes}}{\text{Yes}}$ New, S:Old $\frac{\text{No}}{\text{No}}$ New, W:Add, Z:Discontinued, F:Interchangeable by set, K:Q'ty Change

Copyright (C) 2014 YANMAR CO., LTD. All RightsReserved.

Fig.8. BONNET

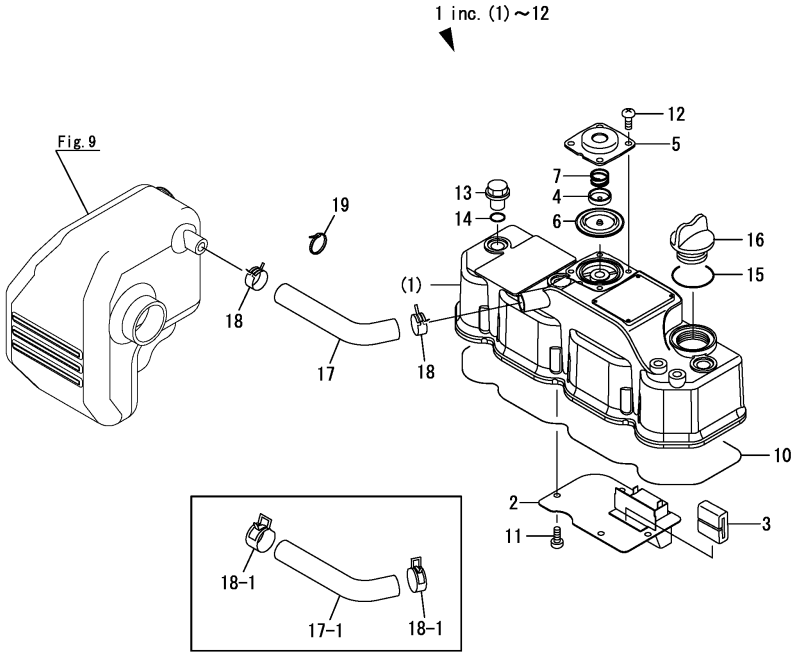

(A)=3JH4E (D)=
(B)= (E)=
(C)= (F)=

No.	Lev.	Parts No.	Description	Q'ty (A)	(B)	(C)	(D)	(E)	(F)	I	R
1	1	129004-11350	BONNET ASSY, HEAD	1							
2	2	129004-03010	PLATE	1							
3	2	129150-03070	BAFFLE, BREATHER	1							
4	2	119802-03110	PLATE	1							
5	2	119802-03120	COVER, DIAPHRAGM	1							
5-1	2	119802-03121	COVER, DIAPHRAGM	1						N	
	(A=E01247)										
6	2	119802-03130	DIAPHRAGM	1							
7	2	119802-03140	SPRING, DIAPHRAGM	1							
7-1	2	119802-03141	SPRING, DIAPHRAGM	1						R	
	(A=E01247)										
10	2	129004-11310	GASKET, BONNET	1							
11	2	22857-500100	SCREW, 5X10	4							
12	2	22857-500100	SCREW, 5X10	4							
13	1	124160-11360	KNOB	3							
14	1	24311-000120	O-RING, 1AP12.0	3							
15	1	24311-000320	O-RING, 1AP32.0	1							
16	1	124160-01751	COVER, FILLER	1							
17	1	129271-03090	PIPE , BREATHER	1							
17-1	1	129271-03091	PIPE, BREATHER	1						S	1
	(A=*2010.06)										
18	1	129410-03990	CLIP,HOSE 21.5	2							
18-1	1	124398-49700	CLIP, HOSE 24.0	2						S	1
	(A=*2010.06)										
19	1	128990-59890	BAND,200	1							

Remarks
(1)Interchangeable by simultaneous replacement with No.17-1, 18-1.

N:Old $\overset{\text{Yes}}{\underset{\text{No}}{\leftrightarrow}}$ New, Q:Old $\overset{\text{No}}{\underset{\text{Yes}}{\leftrightarrow}}$ New, R:Old $\overset{\text{Yes}}{\underset{\text{Yes}}{\leftrightarrow}}$ New, S:Old $\overset{\text{No}}{\underset{\text{No}}{\leftrightarrow}}$ New, W:Add, Z:Discontinued, F:Interchangeable by set, K:Q'ty Change

Copyright (C) 2014 YANMAR CO., LTD. All RightsReserved.

Fig.9. SUCTION MANIFOLD

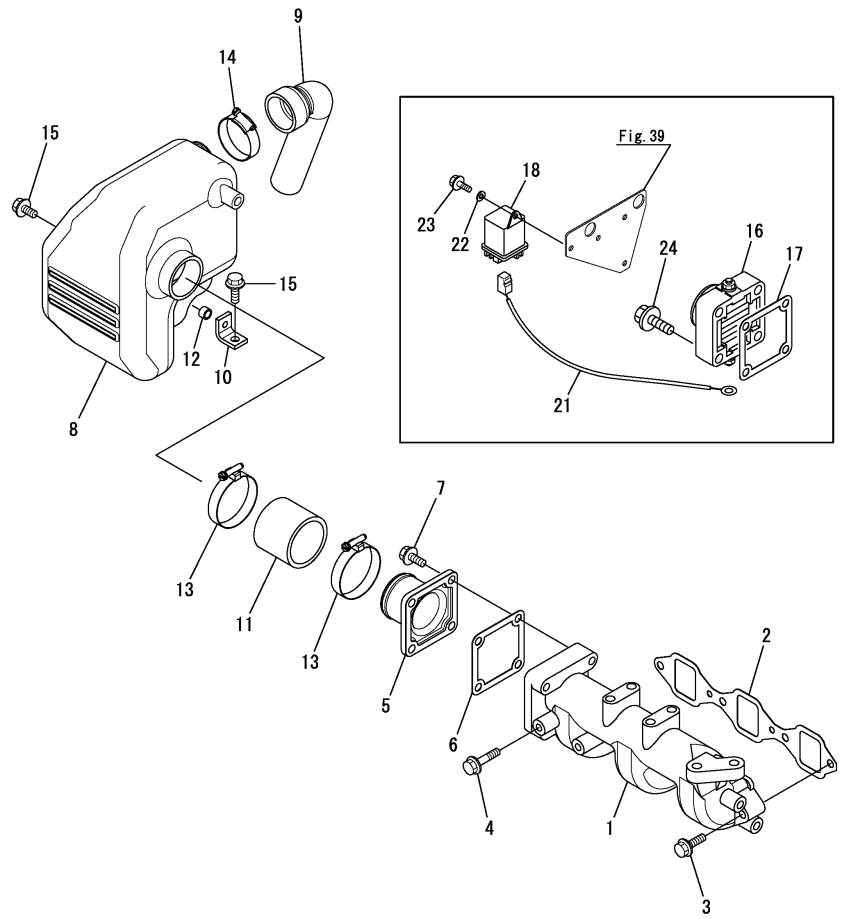

(A)=3JH4E (D)=
(B)= (E)=
(C)= (F)=

No.	Lev.	Parts No.	Description	Q'ty (A)	(B)	(C)	(D)	(E)	(F)	I	R
1	1	129170-12100	MANIFOLD, AIR INTAKE	1							
2	1	129150-12111	GASKET, MANIFOLD	1							
3	1	26106-080252	BOLT, M8X 25 PLATED	3							
4	1	26106-080352	BOLT, M8X 35 PLATED	1							
5	1	129486-12581	JOINT, MANIFOLD	1							
6	1	129150-77511	GASKET	1							
7	1	26106-080202	BOLT, M8X 20 PLATED	4							
8	1	129271-12310	SILENCER	1							
8-1	1	129271-12311	SILENCER	1						N	
	(A=*2006.08)										
9	1	129271-12350	PIPE, SILENCER	1							
10	1	129271-12410	BRACKET, SILENCER	1							
11	1	129271-12810	PIPE,SUC AIR	1							
12	1	105100-55540	COLLAR	1							
12-1	1	128990-77430	COLLAR	1						R	
	(A=*2004.03)										
13	1	23000-060000	CLAMP, 60	2							
14	1	23000-048000	CLAMP, 48	1							
15	1	26106-080162	BOLT, M8X 16 PLATED	2							
16	1	129120-77501	HEATER	1							1
16-1	1	129120-77502	HEATER	1						R	1
	(A=*2006.07)										
17	1	129100-77510	GASKET	1							1
18	1	128990-77910	RELAY, GROW	1							1
18-1	1	128990-77911	RELAY ASSY, GLOW	1						N	1
	(A=*2010.11)										
21	1	129271-77920	HARNESS, WIRE	1							1
21-1	1	129271-77921	HARNESS,WIRE(HEATER	1						R	1
	(A=*2005.05)										
22	1	22217-060000	WASHER, SPRING 6	1							1
23	1	26106-060082	BOLT, M6X 8 PLATED	1							1
24	1	26106-080352	BOLT, M8X 35 PLATED	4							1

Remarks
(1)Optional parts.

N:Old $\xleftarrow[\text{No}]{\text{Yes}}$ New, Q:Old $\xleftarrow[\text{Yes}]{\text{No}}$ New, R:Old $\xleftarrow[\text{Yes}]{\text{Yes}}$ New, S:Old $\xleftarrow[\text{No}]{\text{No}}$ New, W:Add, Z:Discontinued, F:Interchangeable by set, K:Q'ty Change

Copyright (C) 2014 YANMAR CO., LTD. All RightsReserved.

Fig.10. MIXING ELBOW

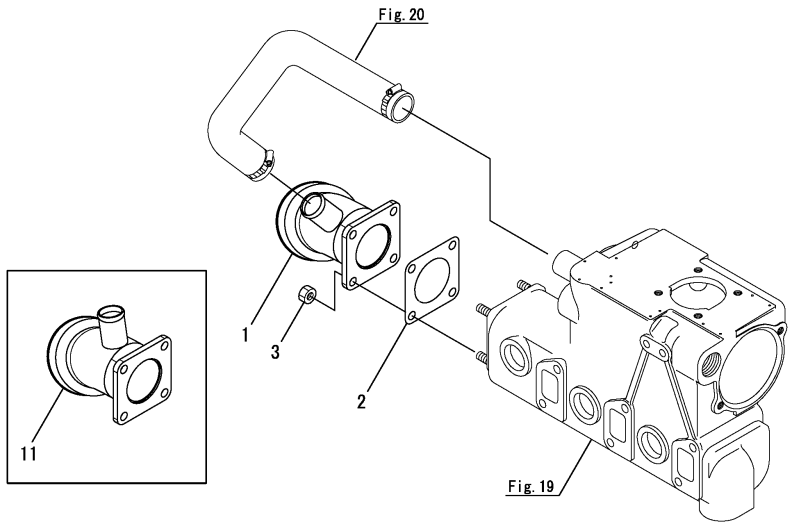

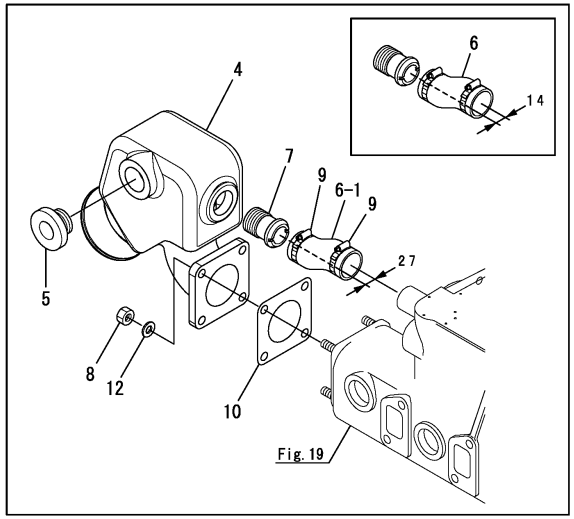

(A)=3JH4E (D)=
(B)= (E)=
(C)= (F)=

No.	Lev.	Parts No.	Description	Q'ty (A)	(B)	(C)	(D)	(E)	(F)	I	R
1	1	129670-13560	ELBOW	1							
1-1	1	129670-13561	ELBOW	1						N	
	(A=*2007.11)										
2	1	129472-18090	GASKET	1							
3	1	26703-080002	NUT, M8	4							1
4	1	129470-13541	ELBOW	1							1
5	1	129472-13560	PLUG, PT3/4	1							1
6	1	129670-49200	PIPE, WATER	1							1
6-1	1	129670-49280	PIPE, WATER	1						S	1
	(A=E00395)										
7	1	123325-49421	JOINT, PIPE	1							1
8	1	26703-080002	NUT, M8	4							1
9	1	129670-49500	CLIP, HOSE 38	2							1
10	1	129472-18090	GASKET	1							1
11	1	129670-13580	ELBOW	1						W	1
	(A=*2005.12)										
11-1	1	129670-13580	ELBOW	1						Z	1
	(A=*2007.11)										
12	1	22137-080000	WASHER, 8	4						W	1
	(A=*2004.11)										

Remarks
(1)Optional parts.

N:Old $\xleftarrow[\text{No}]{\text{Yes}}$ New, Q:Old $\xleftarrow[\text{Yes}]{\text{No}}$ New, R:Old $\xleftarrow[\text{Yes}]{\text{Yes}}$ New, S:Old $\xleftarrow[\text{No}]{\text{No}}$ New, W:Add, Z:Discontinued, F:Interchangeable by set, K:Q'ty Change

Copyright (C) 2014 YANMAR CO., LTD. All RightsReserved.

Fig.11. CAMSHAFT

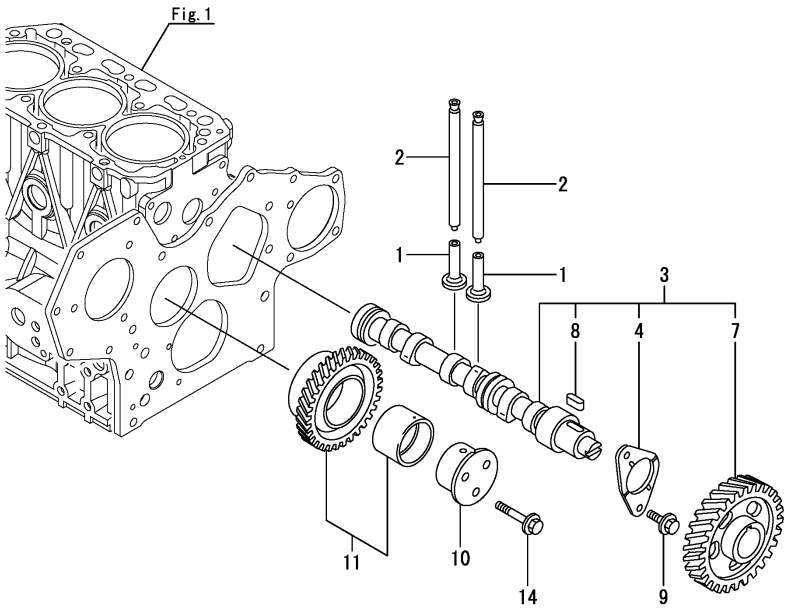

(A)=3JH4E (D)=
(B)= (E)=
(C)= (F)=

No.	Lev.	Parts No.	Description	Q'ty (A)	(B)	(C)	(D)	(E)	(F)	I	R
1	1	129150-14200	TAPPET	6							
2	1	129150-14400	ROD, PUSH L=178	6							
3	1	129129-14580	CAMSHAFT ASSY	1							
4	2	129150-02450	BEARING, THRUST	1							
7	2	129150-14101	GEAR, CAMSHAFT	1							
8	2	22512-070140	KEY, 7X 14	1							
9	1	26106-080142	BOLT, M8X 14 PLATED	2							
10	1	119802-25051	SHAFT, IDLE	1							
11	1	119802-25100	GEAR ASSY, IDLE	1							
11-1	1	119802-25101	GEAR ASSY, IDLE	1						N	
	(A=E03798)										
14	1	26106-080402	BOLT, M8X 40 PLATED	3							

N:Old $\xleftarrow[\text{No}]{\text{Yes}}$ New, Q:Old $\xleftarrow[\text{Yes}]{\text{No}}$ New, R:Old $\xleftarrow[\text{Yes}]{\text{Yes}}$ New, S:Old $\xleftarrow[\text{No}]{\text{No}}$ New, W:Add, Z:Discontinued, F:Interchangeable by set, K:Q'ty Change

Copyright (C) 2014 YANMAR CO., LTD. All RightsReserved.

Fig.12. CRANKSHAFT & FLYWHEEL

(A)=3JH4E (D)=
(B)= (E)=
(C)= (F)=

No.	Lev.	Parts No.	Description	Q'ty (A)	(B)	(C)	(D)	(E)	(F)	I	R
1	1	129004-21001	CRANKSHAFT ASSY	1							
1-1	1	129004-21002	CRANKSHAFT ASSY	1						N	
	(A=E01149)										
2	2	129100-01580	PIN, 8X16	1							
4	2	119802-21201	GEAR, CRANKSHAFT	1							
4-1	2	119802-21202	GEAR, CRANKSHAFT	1						N	
	(A=E01149)										
5	2	22512-070140	KEY, 7X 14	1							
7	1	121111-21501	BOLT, FLYWHEEL	6							
8	1	129270-21591	FLYWHEEL ASSY	1							
10	2	119865-21600	GEAR, RING	1							
11	1	129005-21650	V-PULLEY, 120	1							
12	1	129795-21661	WASHER	1							
13	1	121850-21680	BOLT	1							
14	1	22351-030010	PIN, SPRING 3.0X10	1							
15	1	26013-080142	BOLT, M8X 14	6							1
16	1	177070-03520	DISK, DAMPER D190	1							1
17	1	26106-080162	BOLT, M8X 16 PLATED	6							1
18	1	177099-03500	DISK, DAMPER	1							2
18-1	1	196440-04310	COUPLING, 250 SP10	1						F	3
	(A=*2004.04)										
19	1	26013-080142	BOLT, M8X 14	6							2
19-1	1	26106-080222	BOLT, M8X 22 PLATED	6						F	3
	(A=*2004.04)										
19-2	1	26106-080202	BOLT, M8X 20 PLATED	6						R	
	(A=*2008.01)										
20	1	129670-81850	FAN, FLYWHEEL	1							

Remarks
(1)For KM35P, KM35A
(2)For SD40
(3)Interchangeable by simultaneous replacement with No.18-1, 19-1.

N:Old $\xleftrightarrow[\text{No}]{\text{Yes}}$ New, Q:Old $\xleftrightarrow[\text{Yes}]{\text{No}}$ New, R:Old $\xleftrightarrow[\text{Yes}]{\text{Yes}}$ New, S:Old $\xleftrightarrow[\text{No}]{\text{No}}$ New, W:Add, Z:Discontinued, F:Interchangeable by set, K:Q'ty Change

Copyright (C) 2014 YANMAR CO., LTD. All RightsReserved.

Fig.13. PISTON & CONNECTING ROD

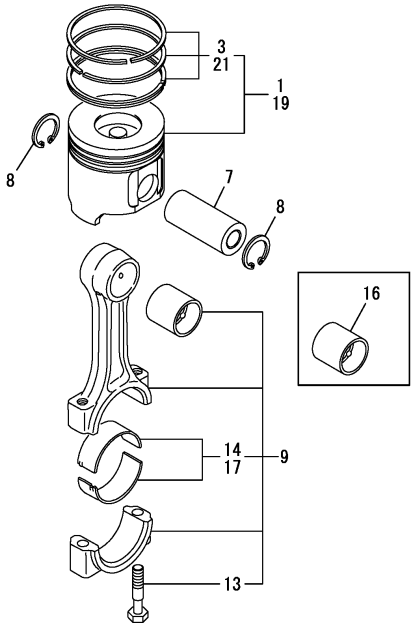

Remarks
(1)Spare parts.
(2)Under-sized (U.S.=0.25) parts.
(3)Over-sized (O.S.=0.25) parts.

(A)=3JH4E (D)=
(B)= (E)=
(C)= (F)=

No.	Lev.	Parts No.	Description	Q'ty (A)	(B)	(C)	(D)	(E)	(F)	I	R
1	1	129005-22080	PISTON ASSY	3							
3	2	129005-22500	RING SET, PISTON	3							
7	1	129202-22300	PIN, PISTON D26 L70	3							
8	1	22252-000260	RING, 26	6							
9	1	729402-23100	ROD ASSY, CONNECTING	3							
13	3	121550-23200	BOLT, CONNECTING ROD	6							
14	2	129150-23600	BEARING, CRANK PIN	3							
14-1	2	129150-23601	BEARING, CRANK PIN	3						N	
	(A=E04680)										
16	1	129100-23910	BEARING, PISTON PIN	3							1
17	1	129150-23610	BEARING, 0.25 US	3							2
19	1	129005-22900	PISTON ASSY, 0.25 OS	3							3
21	2	129005-22950	RING SET, 0.25 OS	3							3

N:Old $\xleftrightarrow[\text{No}]{\text{Yes}}$ New, Q:Old $\xleftrightarrow[\text{Yes}]{\text{No}}$ New, R:Old $\xleftrightarrow[\text{Yes}]{\text{Yes}}$ New, S:Old $\xleftrightarrow[\text{No}]{\text{No}}$ New, W:Add, Z:Discontinued, F:Interchangeable by set, K:Q'ty Change

Copyright (C) 2014 YANMAR CO., LTD. All RightsReserved.

Fig.14. LUB. OIL SYSTEM

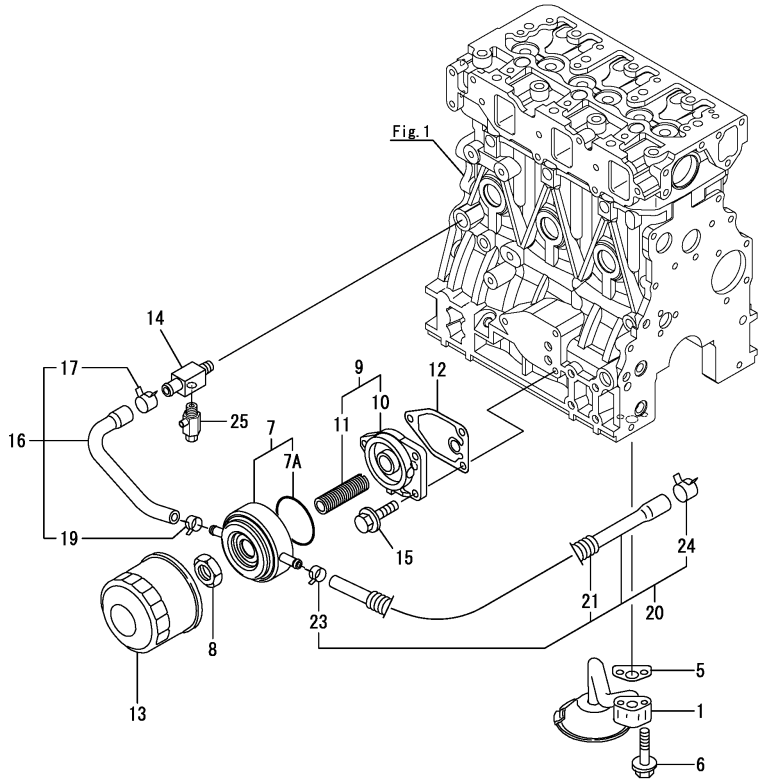

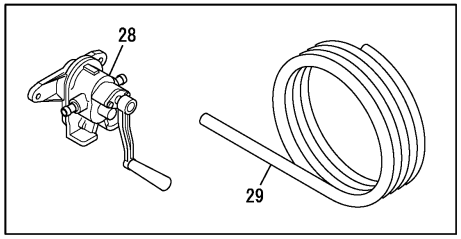

(A)=3JH4E (D)=
(B)= (E)=
(C)= (F)=

No.	Lev.	Parts No.	Description	Q'ty (A)	(B)	(C)	(D)	(E)	(F)	I	R
1	1	129150-35091	PIPE ASSY, OIL INLET	1							
5	1	129150-35042	GASKET	1							
6	1	26106-080352	BOLT, M8X 35 PLATED	2							
7	1	129508-33010	COOLER ASSY, OIL	1							
7A	2	129508-33050	O-RING	1						W	
	(A=FROM 1ST)										
8	1	129417-33110	NUT	1							
8-1	1	129417-33111	NUT, OIL COOLER	1						R	
	(A=*2012.03)										
9	1	129006-35100	BRACKET ASSY, FILTER	1							
10	2	119802-35110	BRACKET, FILTER	1							
11	2	129417-35150	BOLT, STUD M20X67	1							
12	1	129150-35111	GASKET	1							
13	1	119305-35170	FILTER ASSY, D68XL65	1							
14	1	129006-44480	JOINT	1							
15	1	26106-080202	BOLT, M8X 20 PLATED	3							
16	1	129508-49030	HOSE ASSY, WATER	1							
17	2	171008-03990	CLAMP, HOSE 18.5	1							
19	2	23080-015000	CLAMP, 15	1							
20	1	129508-49040	HOSE ASSY, WATER	1							
21	2	119940-59130	TUBE, CORRUGATED 19	1							
23	2	23080-015000	CLAMP, 15	1							
24	2	23080-018000	CLAMP, 18	1							
24-1	2	171008-03990	CLAMP, HOSE 18.5	1						R	
	(A=E00409)										
25	1	119620-49290	COCK ASSY, 1/4	1							
28	1	124413-39100	PUMP ASSY, WASTE	1							1
29	1	43720-001220	PIPE	1							1
29-1	1	129670-39990	HOSE,OIL DRAIN 3M	1						R	1
	(A=*2008.01)										

Remarks
(1)Optional parts.

N:Old $\overset{\text{Yes}}{\underset{\text{No}}{\leftrightarrows}}$ New, Q:Old $\overset{\text{No}}{\underset{\text{Yes}}{\leftrightarrows}}$ New, R:Old $\overset{\text{Yes}}{\underset{\text{Yes}}{\leftrightarrows}}$ New, S:Old $\overset{\text{No}}{\underset{\text{No}}{\leftrightarrows}}$ New, W:Add, Z:Discontinued, F:Interchangeable by set, K:Q'ty Change

Copyright (C) 2014 YANMAR CO., LTD. All RightsReserved.

Fig.15. LUB. OIL PIPE

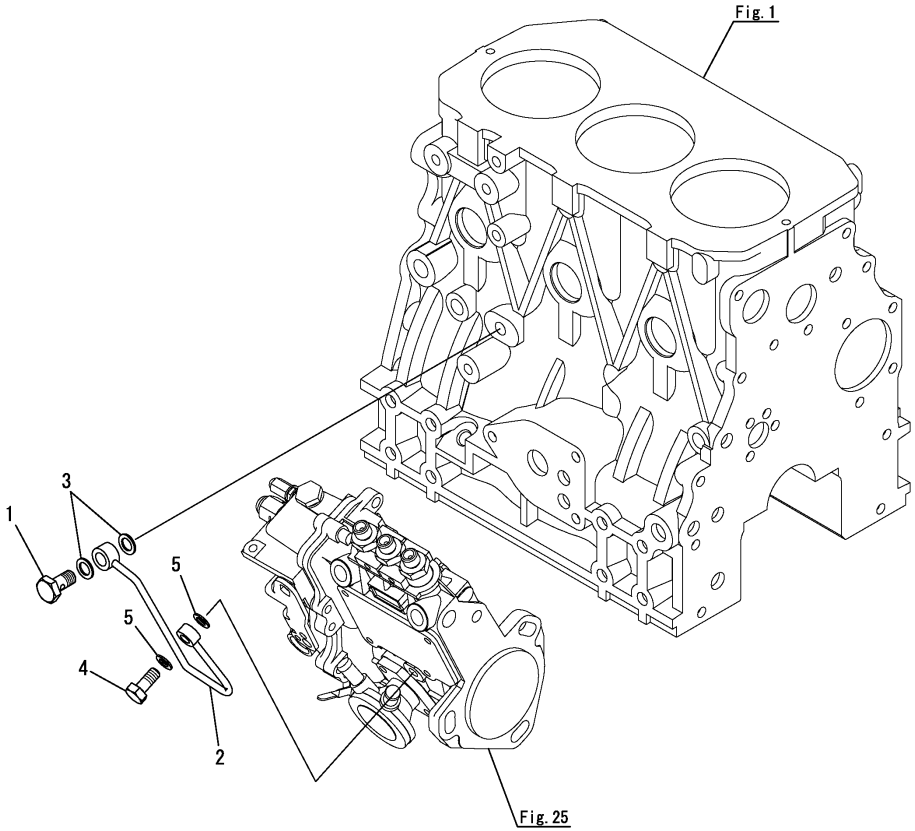

(A)=3JH4E (D)=
(B)= (E)=
(C)= (F)=

No.	Lev.	Parts No.	Description	Q'ty (A)	(B)	(C)	(D)	(E)	(F)	I	R
1	1	124160-39140	BOLT, PIPE JOINT M10	1							
2	1	129271-39450	PIPE ASSY, OIL	1							
3	1	22190-100002	WASHER, SEAL 10	2							
4	1	124550-59820	BOLT, PIPE JOINT M8	1							
5	1	22190-080002	WASHER, SEAL 8	2							

N:Old $\xleftrightarrow[\text{No}]{\text{Yes}}$ New, Q:Old $\xleftrightarrow[\text{Yes}]{\text{No}}$ New, R:Old $\xleftrightarrow[\text{Yes}]{\text{Yes}}$ New, S:Old $\xleftrightarrow[\text{No}]{\text{No}}$ New, W:Add, Z:Discontinued, F:Interchangeable by set, K:Q'ty Change

Copyright (C) 2014 YANMAR CO., LTD. All RightsReserved.

Fig.16. COOLING SEA WATER PUMP

(A)=3JH4E (D)=
(B)= (E)=
(C)= (F)=

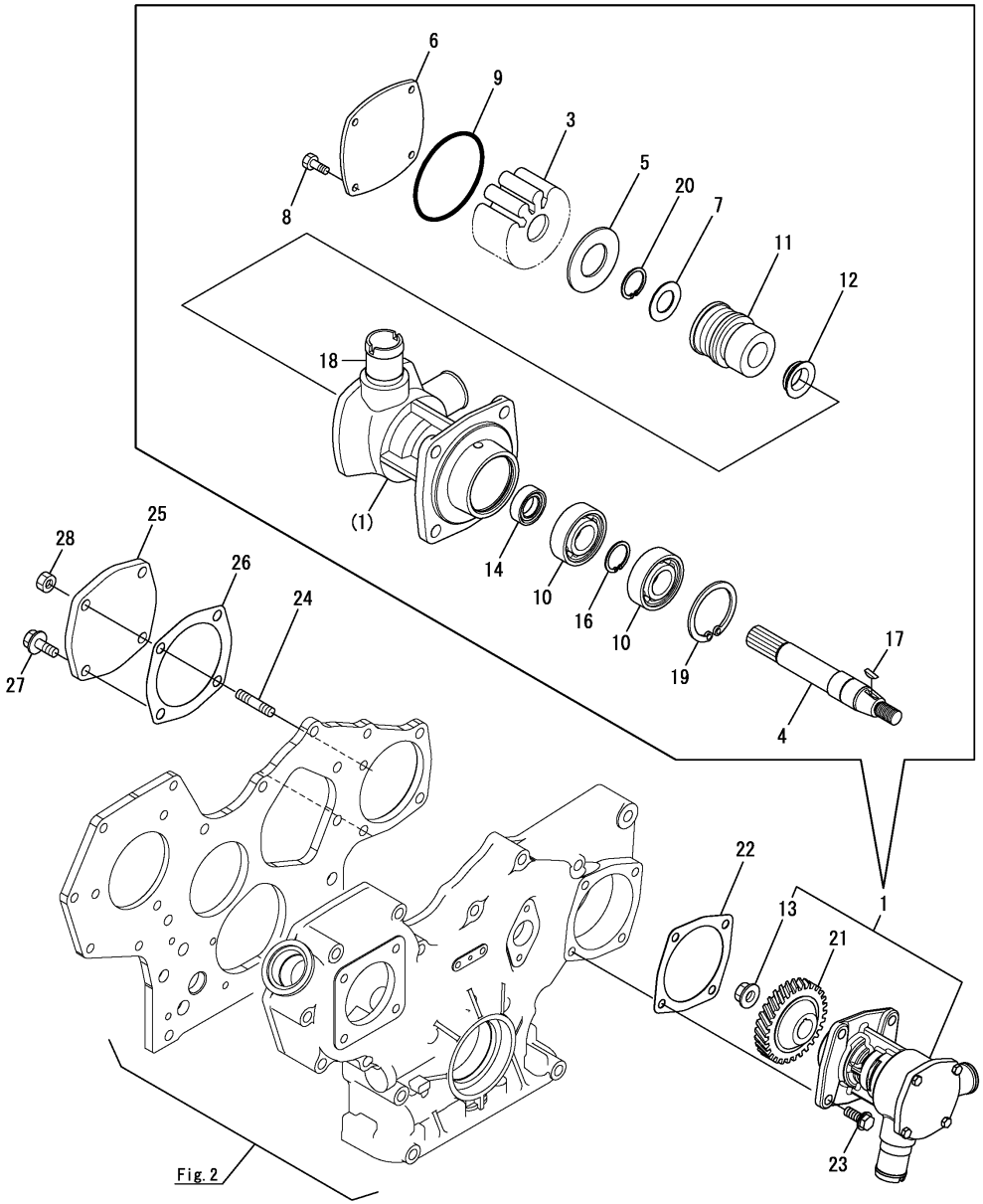

No.	Lev.	Parts No.	Description	Q'ty (A)	(B)	(C)	(D)	(E)	(F)	I	R
1	1	129271-42500	PUMP ASSY, WATER	1							
1-1	1	129271-42501	PUMP ASSY, WATER	1						N	
	(A=*2005.06.)										
3	2	129670-42530	IMPELLER	1							
3-1	2	129670-42531	IMPELLER	1						N	
	(A=*2005.06.)										
4	2	X0146531	SHAFT	1							
5	2	129670-42540	PLATE	1							
6	2	129670-42520	COVER	1							
7	2	129670-42550	WASHER	1							
8	2	129271-42510	SCREW	4							
9	2	119773-42570	O-RING	1							
10	2	X03431483	BEARING	2							
11	2	129670-42560	SEAL, MECHANICAL	1							
12	2	X02230015	RING	1							
13	2	X00190001	NUT, LOCK	1							
14	2	X02233001	SEAL, LIP	1							
16	2	X00370017	CIRCLIP	1							
17	2	129670-42580	KEY	1							
18	2	123325-49421	JOINT, PIPE	1							
19	2	X00371040	CIRCLIP	1							
20	2	129670-42570	CIRCLIP	1							
21	1	129271-42700	GEAR, PUMP	1							
22	1	129150-01881	GASKET	1							
23	1	26106-080202	BOLT, M8X 20 PLATED	4							
24	1	121450-01560	STUD, M8X22	1							
25	1	124240-01871	COVER	1							
26	1	129150-01881	GASKET	1							
26-1	1	129C26-01890	GASKET, HO-P	1						R	
	(A=*2012.06.)										
27	1	26106-080252	BOLT, M8X 25 PLATED	3							
28	1	26306-080002	NUT, M8	1							

N:Old $\xleftrightarrow[\text{No}]{\text{Yes}}$ New, Q:Old $\xleftrightarrow[\text{Yes}]{\text{No}}$ New, R:Old $\xleftrightarrow[\text{Yes}]{\text{Yes}}$ New, S:Old $\xleftrightarrow[\text{No}]{\text{No}}$ New, W:Add, Z:Discontinued, F:Interchangeable by set, K:Q'ty Change

Copyright (C) 2014 YANMAR CO., LTD. All RightsReserved.

Fig.17. COOLING SEA WATER PUMP(OPTIONAL)

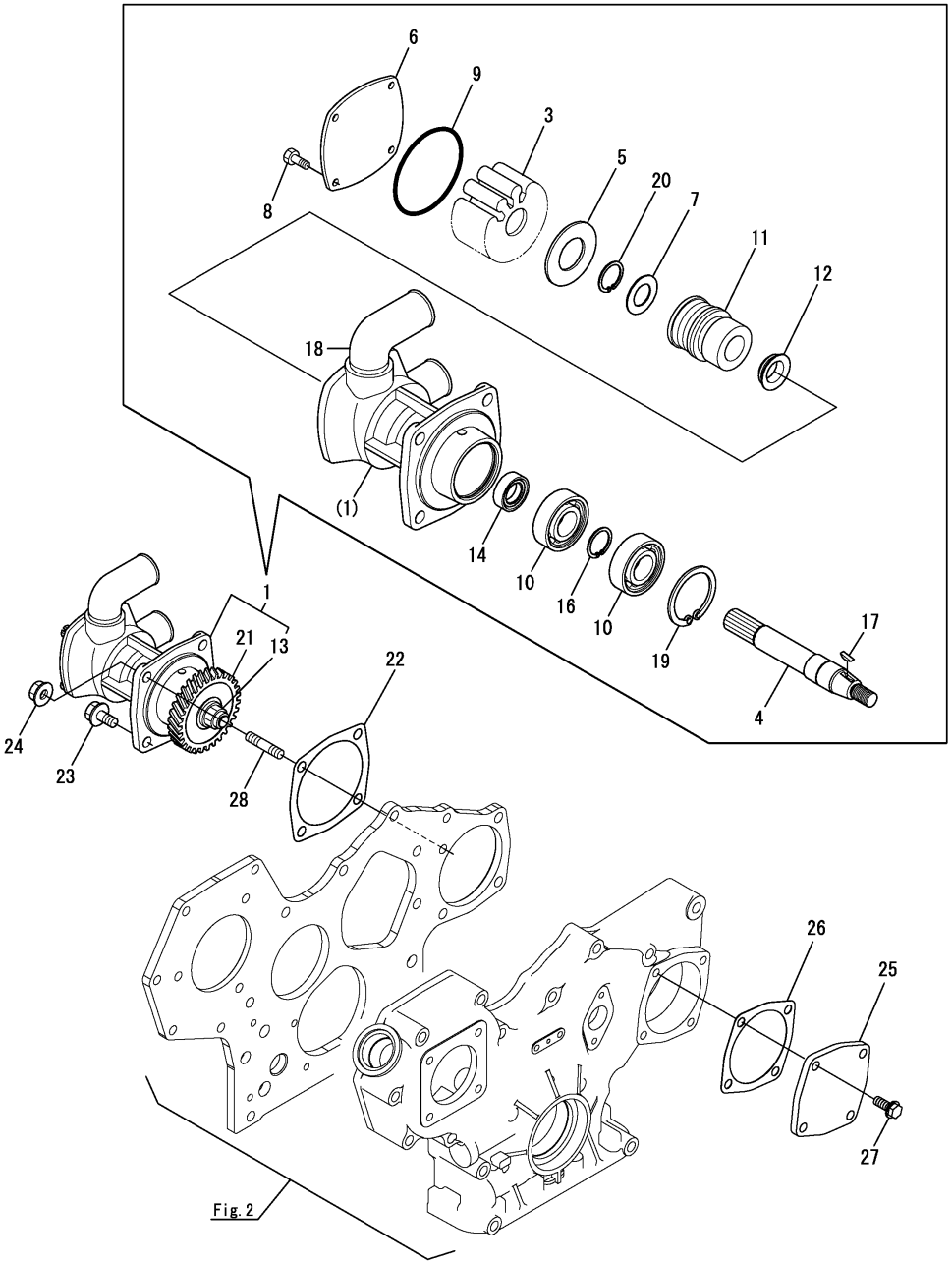

(A)=3JH4E (D)=
(B)= (E)=
(C)= (F)=

No.	Lev.	Parts No.	Description	Q'ty (A)	(B)	(C)	(D)	(E)	(F)	I	R
1	1	129670-42511	PUMP ASSY, WATER	1							
2-1	1	129670-42512	PUMP ASSY, WATER	1						N	
	(A=*2005.06.)										
3	2	129670-42530	IMPELLER	1							
3-1	2	129670-42531	IMPELLER	1						N	
	(A=*2005.06.)										
4	2	X0146531	SHAFT	1							
5	2	129670-42540	PLATE	1							
6	2	129670-42520	COVER	1							
7	2	129670-42550	WASHER	1							
8	2	129271-42510	SCREW	4							
9	2	119773-42570	O-RING	1							
10	2	X03431483	BEARING	2							
11	2	129670-42560	SEAL, MECHANICAL	1							
12	2	X02230015	RING	1							
13	2	X00190001	NUT, LOCK	1							
14	2	X02233001	SEAL, LIP	1							
16	2	X00370017	CIRCLIP	1							
17	2	129670-42580	KEY	1							
18	2	X01357681	CONNECTOR	1							
19	2	X00371040	CIRCLIP	1							
20	2	129670-42570	CIRCLIP	1							
21	1	129670-42700	GEAR, PUMP	1							
22	1	129150-01881	GASKET	1							
23	1	26106-080252	BOLT, M8X 25 PLATED	3							
24	1	26366-080002	NUT, M8	1							
25	1	124240-01871	COVER	1							
26	1	129150-01881	GASKET	1							
26-1	1	129C26-01890	GASKET, HO-P	1						R	
	(A=*2012.06.)										
27	1	26106-080162	BOLT, M8X 16 PLATED	4							
28	1	121450-01560	STUD, M8X22	1							

N:Old $\xleftrightarrow[\text{No}]{\text{Yes}}$ New, Q:Old $\xleftrightarrow[\text{Yes}]{\text{No}}$ New, R:Old $\xleftrightarrow[\text{Yes}]{\text{Yes}}$ New, S:Old $\xleftrightarrow[\text{No}]{\text{No}}$ New, W:Add, Z:Discontinued, F:Interchangeable by set, K:Q'ty Change

Copyright (C) 2014 YANMAR CO., LTD. All RightsReserved.

Fig.18. COOLING FRESH WATER PUMP

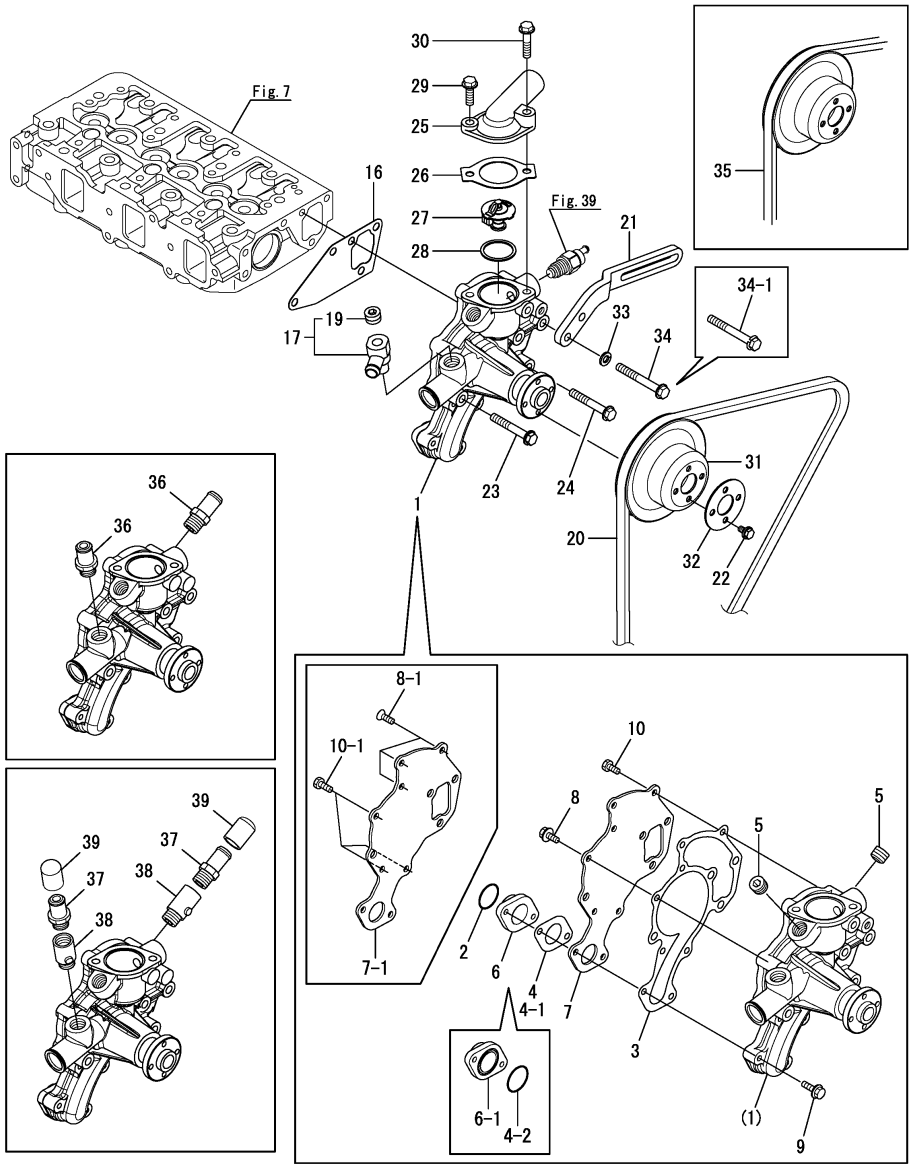

No.	Lev.	Parts No.	Description	Q'ty (A)	(B)	(C)	(D)	(E)	(F)	I	R
			(A)=3JH4E				(D)=				
			(B)=				(E)=				
			(C)=				(F)=				
1	1	129271-42000	PUMP ASSY, WATER	1							
1-1	1	129271-42001	PUMP ASSY, WATER	1						N	
	(A=E02306)										
2	2	129054-42320	O-RING	1							
3	2	129052-42050	GASKET	1							
3-1	2	129150-42059	GASKET	1						R	
	(A=E02306)										
4	2	129052-42310	GASKET	1							
4-1	2	129150-42319	GASKET	1						R	
	(A=E02306)										
4-2	2	24358-240310	O-RING, 524031	1						S	1
	(A=E04012)										
5	2	23875-030000	PLUG, R03	3							
5-1	2	129916-49740	PLUG, R03	3						R	
	(A=E02306)										
6	2	129150-42300	FLANGE	1							
6-1	2	129150-42301	FLANGE	1						S	1
	(A=E04012)										
7	2	129150-42129	PLATE	1							
7-1	2	129263-42120	PLATE	1						S	
	(A=E02306)										
8	2	26106-060142	BOLT, M6X 14 PLATED	5							
8-1	2	26577-060142	SCREW M 6X 14	3						S	
	(A=E02306)										
9	2	26106-060202	BOLT, M6X 20 PLATED	2							
10	2	26116-060162	BOLT, M6X 16 PLATED	1							
10-1	2	26116-060162	BOLT, M6X 16 PLATED	3						K	
	(A=E02306)										
16	1	129486-42050	GASKET, WATER PUMP	1							
17	1	129270-49400	JOINT ASSY, PUMP	1							
19	2	23875-030000	PLUG, R03	1							
20	1	25152-004300	V-BELT, A43	1							
21	1	129495-77330	ADJUSTER, BELT	1							
22	1	26106-060102	BOLT, M6X 10 PLATED	4							
23	1	26106-080552	BOLT, M8X 55 PLATED	2							
24	1	26106-080552	BOLT, M8X 55 PLATED	1							
25	1	129470-49540	COVER, THERMOSTAT	1							
26	1	129795-49551	GASKET	1							
27	1	129470-49801	THERMOSTAT, 76.5	1							
28	1	129470-49810	GASKET, THERMOSTAT	1							
28-1	1	129150-49811	GASKET, THERMOSTAT	1						R	
	(A=*2009.12)										
29	1	26106-080252	BOLT, M8X 25 PLATED	1							
30	1	26106-080352	BOLT, M8X 35 PLATED	1							
31	1	129550-42350	V-PULLEY, D=120	1							
32	1	129156-44760	WASHER	1							
33	1	22217-080000	WASHER, SPRING 8	1						Z	
	(A=*2004.10)										
34	1	26106-080652	BOLT, M8X 65 PLATED	1							
34-1	1	26013-080652	BOLT, M8X 65	1						N	
	(A=*2004.10)										

Remarks
(1)Heater kit (with out Cock)
(2)Heater kit (with Cock)

N:Old $\xleftrightarrow[\text{No}]{\text{Yes}}$ New, Q:Old $\xleftrightarrow[\text{Yes}]{\text{No}}$ New, R:Old $\xleftrightarrow[\text{Yes}]{\text{Yes}}$ New, S:Old $\xleftrightarrow[\text{No}]{\text{No}}$ New, W:Add, Z:Discontinued, F:Interchangeable by set, K:Q'ty Change

++ CONTINUE ++

Copyright (C) 2014 YANMAR CO., LTD. All RightsReserved.

Fig.18. COOLING FRESH WATER PUMP

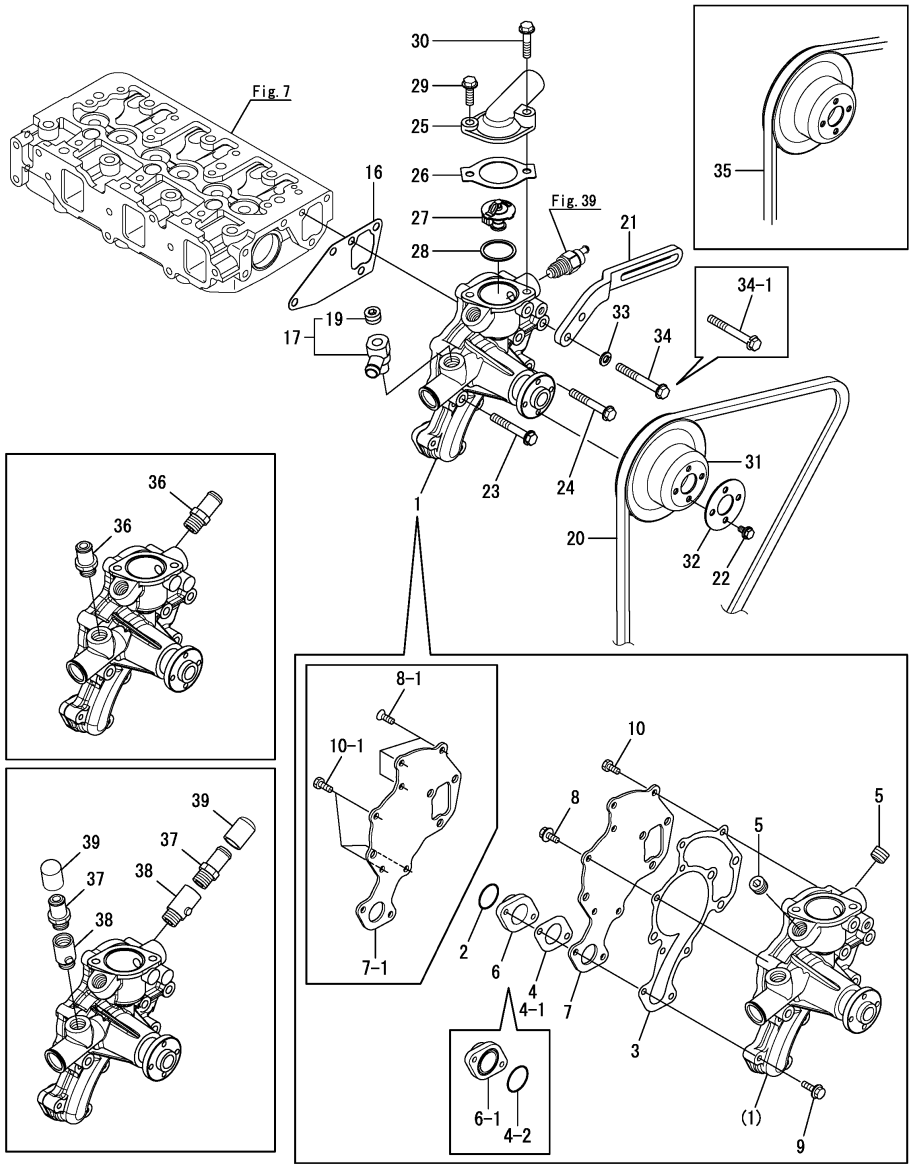

(A)=3JH4E (D)=
(B)= (E)=
(C)= (F)=

No.	Lev.	Parts No.	Description	Q'ty (A)	(B)	(C)	(D)	(E)	(F)	I	R
35	1	129271-42280	V-BELT, A43.5	1						W	
	(A=FROM 1ST)										
36	1	128990-49320	JOINT, 3/8	2						W	
	(A=*2004.11)										
37	1	128990-49320	JOINT, 3/8	2						W	
	(A=*2004.11)										
38	1	129670-49390	COCK ASSY,R1/4XRP3/8	2						W	
	(A=*2004.11)										
39	1	128990-49400	CAP,WATER	2						W	
	(A=*2004.11)										

Remarks
(1)Heater kit (with out Cock)
(2)Heater kit (with Cock)

N:Old $\frac{\text{Yes}}{\text{No}}$ New, Q:Old $\frac{\text{No}}{\text{Yes}}$ New, R:Old $\frac{\text{Yes}}{\text{Yes}}$ New, S:Old $\frac{\text{No}}{\text{No}}$ New, W:Add, Z:Discontinued, F:Interchangeable by set, K:Q'ty Change

Copyright (C) 2014 YANMAR CO., LTD. All RightsReserved.

Fig.19. COOLING FRESH WATER COOLER

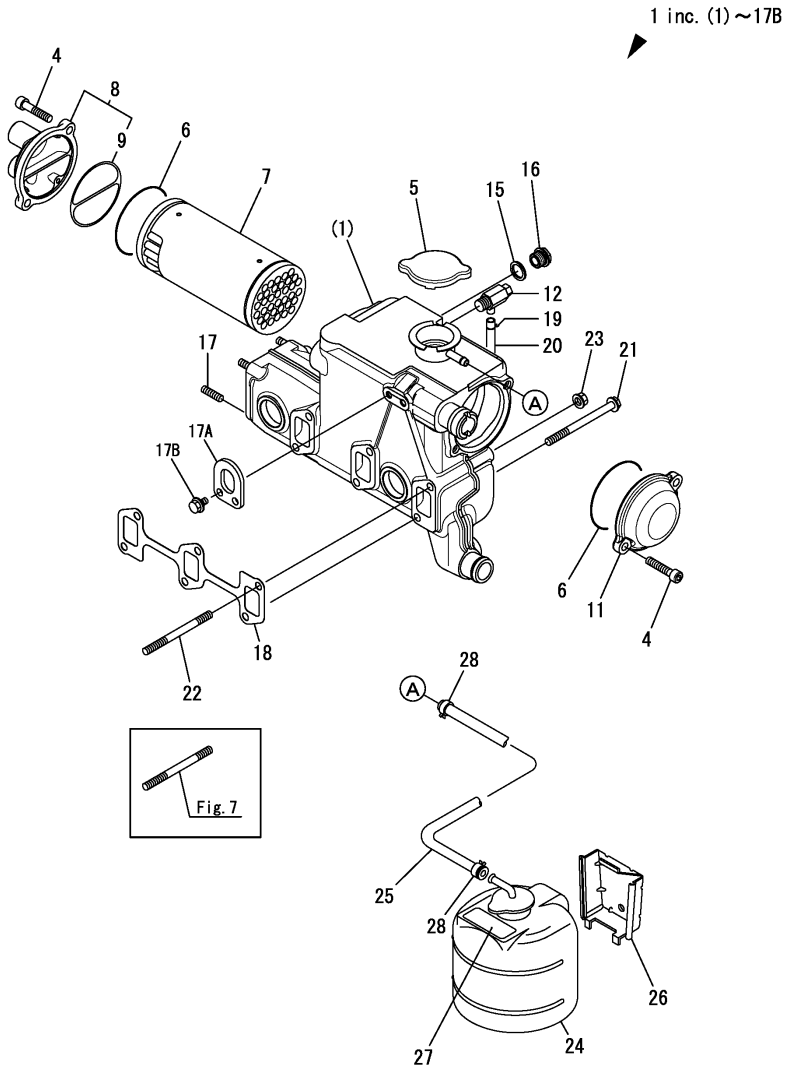

(A)=3JH4E (D)=
(B)= (E)=
(C)= (F)=

No.	Lev.	Parts No.	Description	Q'ty (A)	(B)	(C)	(D)	(E)	(F)	I	R
1	1	129270-44910	COOLER ASSY, WATER	1							
4	2	129673-44090	BOLT, M8X40	4							
5	2	129673-44130	CAP	1							
5-1	2	129673-44131	CAP	1						N	
	(A=*2005.06)										
6	2	129670-44150	O-RING, 74.5X3	2							
7	2	129270-44410	CORE ASSY, COOLER	1							
8	2	129670-44430	COVER CMP,COOLER A	1							
9	3	120322-33050	GASKET	1							
11	2	129670-44450	COVER, COOLER	1							
12	2	119620-49290	COCK ASSY, 1/4	1							
15	2	23414-170000	GASKET, 17X1.0	1							
16	2	23893-030002	PLUG, G3/8	1							
16-1	2	23894-030002	PLUG, G3/8	1						R	
	(A=*2007.12)										
17	2	128170-13600	STUD, M8X31	4							
17-1	2	129670-13600	STUD	4						R	
	(A=*2006.07)										
17A	2	129670-07230	LIFTER	1						W	
	(A=*2007.12)										
17B	2	26450-080162	BOLT, M8X 16	2						W	
	(A=*2007.12)										
18	1	129150-13110	GASKET	1							
19	1	124460-77680	RETAINER	1							
20	1	23061-070300	PIPE, 7X 300	1							
21	1	26106-081002	BOLT, M8X100 PLATED	4							
22	1	26216-081002	STUD, M8X100	2						Z	
	(A=E00409)										
23	1	26366-080002	NUT, M8	2							
24	1	128397-44500	TANK ASSY, SUB	1							
25	1	129270-44500	PIPE, OVERFLOW	1							
25-1	1	129270-44501	PIPE	1							
26	1	128397-44510	BRACKET	1							
27	1	129670-44570	LABEL, SUB-TANK	1							
28	1	23010-013000	CLAMP 13	2							

N:Old $\frac{\text{Yes}}{\text{No}}$ New, Q:Old $\frac{\text{No}}{\text{Yes}}$ New, R:Old $\frac{\text{Yes}}{\text{Yes}}$ New, S:Old $\frac{\text{No}}{\text{No}}$ New, W:Add, Z:Discontinued, F:Interchangeable by set, K:Q'ty Change

Copyright (C) 2014 YANMAR CO., LTD. All RightsReserved.

Fig.20. COOLING SEA WATER PIPE

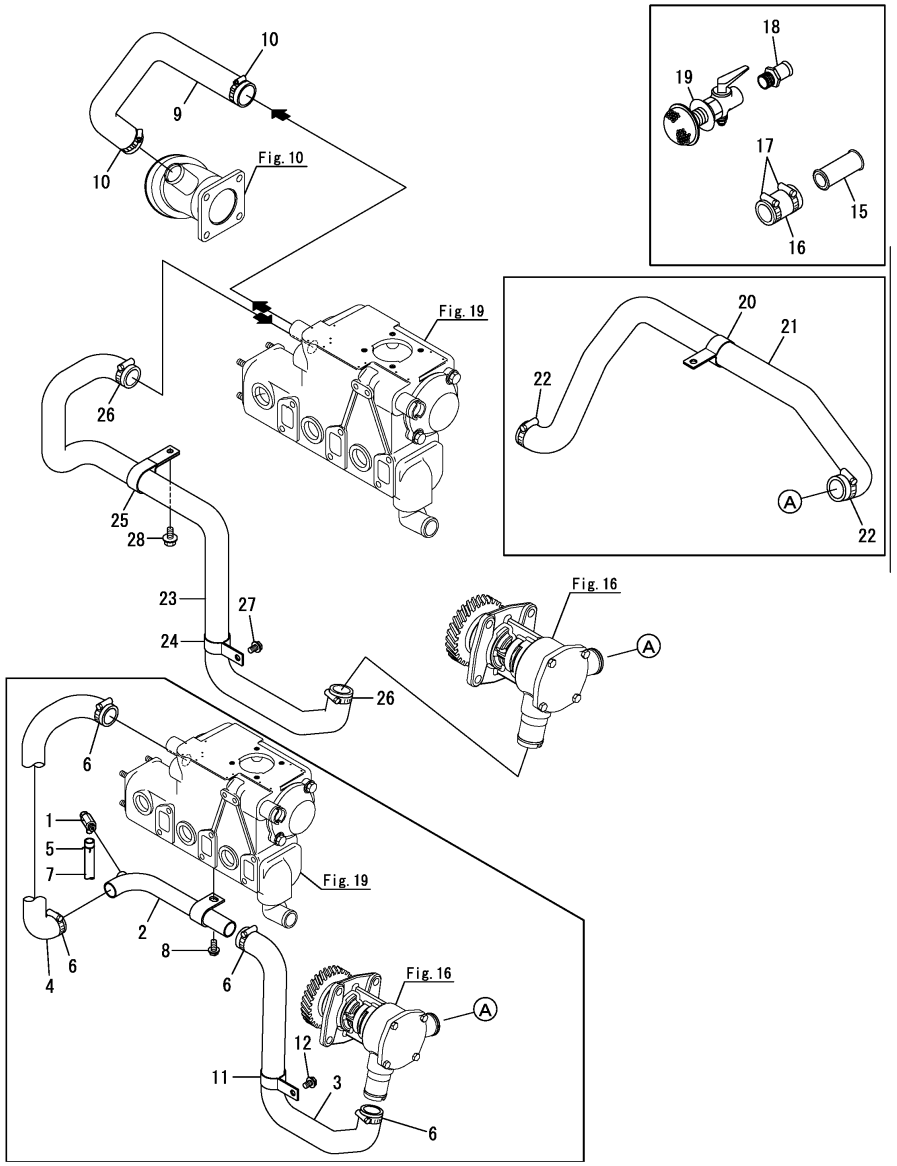

(A)=3JH4E (D)=
(B)= (E)=
(C)= (F)=

No.	Lev.	Parts No.	Description	Q'ty (A)	(B)	(C)	(D)	(E)	(F)	I	R
1	1	129670-49290	COCK ASSY, R1/8	1						Z	
	(A=*2007.02)										
2	1	129170-49010	PIPE, WATER	1						Z	
	(A=*2007.02)										
3	1	129271-49010	PIPE, WATER	1						Z	
	(A=*2007.02)										
4	1	129270-49040	PIPE, WATER	1						Z	
	(A=*2007.02)										
5	1	124460-77680	RETAINER	1						Z	
	(A=*2007.02)										
6	1	129670-49500	CLIP, HOSE 38	4						Z	
	(A=*2007.02)										
7	1	23061-070300	PIPE, 7X 300	1						Z	
	(A=*2007.02)										
8	1	26106-080162	BOLT, M8X 16 PLATED	1						Z	
	(A=*2007.02)										
9	1	129670-49150	PIPE, WATER	1							
10	1	129670-49500	CLIP, HOSE 38	2							
11	1	129271-49110	RETAINER, PIPE	1						Z	
	(A=*2007.02)										
12	1	26106-080122	BOLT, M8X 12 PLATED	1						Z	
	(A=*2007.02)										
15	1	129490-49070	JOINT	1							1
16	1	129171-49900	JOINT, RUBBER	1							1
17	1	129670-49500	CLIP, HOSE 38	2							1
18	1	43530-500570	JOINT, PIPE	1							1
19	1	43662-025030	COCK ASSY, KINGSTON	1							1
19-1	1	43662-025031	COCK, KINGSTON	1						N	1
	(A=*2006.12)										
20	1	129671-49110	RETAINER	1							2
21	1	129271-49210	PIPE, WATER	1							2
22	1	129670-49500	CLIP, HOSE 38	2							2
23	1	129271-49040	PIPE, COOLING WATER	1						W	
	(A=*2007.02)										
24	1	129271-49110	RETAINER, PIPE	1						W	
	(A=*2007.02)										
25	1	129671-49120	RETAINER	1						W	
	(A=*2007.02)										
26	1	129670-49500	CLIP, HOSE 38	2						W	
	(A=*2007.02)										
27	1	26106-080122	BOLT, M8X 12 PLATED	1						W	
	(A=*2007.02)										
28	1	26106-080162	BOLT, M8X 16 PLATED	1						W	
	(A=*2007.02)										

Remarks
(1)Optional parts.
(2)For SD40

N:Old $\xleftrightarrow[\text{No}]{\text{Yes}}$ New, Q:Old $\xleftrightarrow[\text{Yes}]{\text{No}}$ New, R:Old $\xleftrightarrow[\text{Yes}]{\text{Yes}}$ New, S:Old $\xleftrightarrow[\text{No}]{\text{No}}$ New, W:Add, Z:Discontinued, F:Interchangeable by set, K:Q'ty Change

Copyright (C) 2014 YANMAR CO., LTD. All RightsReserved.

Fig.47. (20A)COOLING SEA WATER PIPE(REAR PUMP SPEC.:OPTIONAL)

(A)=3JH4E (D)=
(B)= (E)=
(C)= (F)=

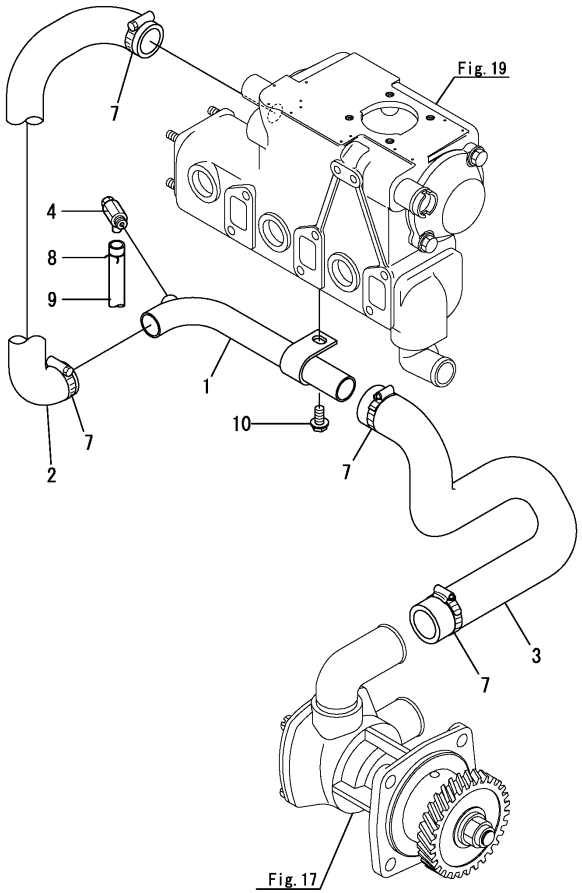

No.	Lev.	Parts No.	Description	Q'ty (A)	(B)	(C)	(D)	(E)	(F)	I	R
1	1	129170-49010	PIPE, WATER	1							
2	1	129270-49040	PIPE, WATER	1							
3	1	129670-49110	PIPE, WATER	1							
4	1	129670-49290	COCK ASSY, R1/8	1							
7	1	129670-49500	CLIP, HOSE 38	4							
8	1	124460-77680	RETAINER	1							
9	1	23061-070300	PIPE, 7X 300	1							
10	1	26106-080162	BOLT, M8X 16 PLATED	1							

N:Old $\xleftrightarrow[\text{No}]{\text{Yes}}$ New, Q:Old $\xleftrightarrow[\text{Yes}]{\text{No}}$ New, R:Old $\xleftrightarrow[\text{Yes}]{\text{Yes}}$ New, S:Old $\xleftrightarrow[\text{No}]{\text{No}}$ New, W:Add, Z:Discontinued, F:Interchangeable by set, K:Q'ty Change

Copyright (C) 2014 YANMAR CO., LTD. All RightsReserved.

Fig.21. COOLING FRESH WATER PIPE

(A)=3JH4E (D)=
(B)= (E)=
(C)= (F)=

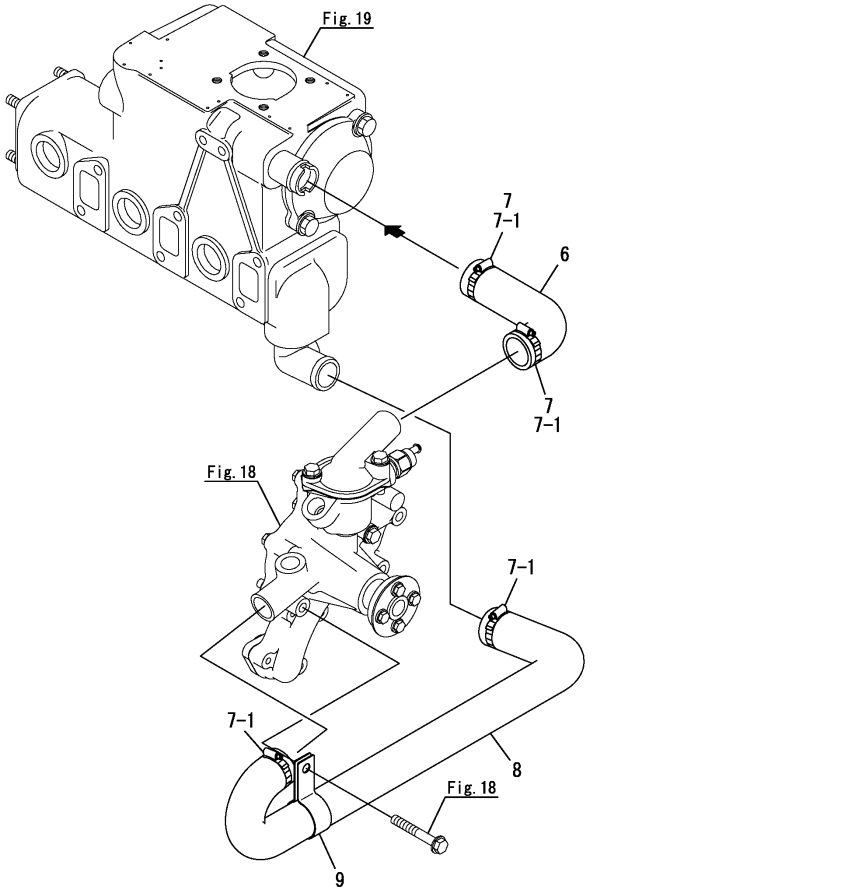

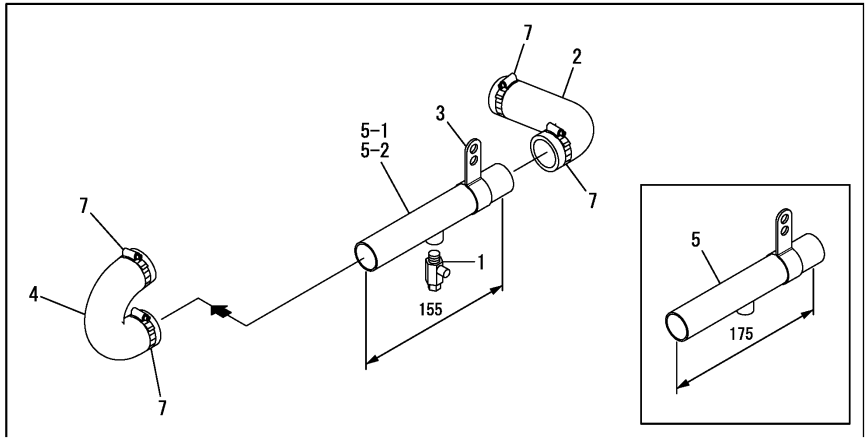

No.	Lev.	Parts No.	Description	Q'ty (A)	(B)	(C)	(D)	(E)	(F)	I	R
1	1	129670-49290	COCK ASSY, R1/8	1						Z	
	(A=*2007.02)										
2	1	129270-49210	PIPE, WATER	1						Z	
	(A=*2007.02)										
3	1	129470-49220	RETAINER	1						Z	
	(A=*2007.02)										
4	1	129673-49230	PIPE, WATER	1						Z	
	(A=*2007.02)										
5	1	129470-49250	PIPE, WATER	1							
5-1	1	129271-49250	PIPE, COOLING WATER	1						S	
	(A=E00395)										
5-2	1	129271-49250	PIPE, COOLING WATER	1						Z	
	(A=*2007.02)										
6	1	129270-49210	PIPE, WATER	1							
7	1	129670-49500	CLIP, HOSE 38	6							
7-1	1	129670-49500	CLIP, HOSE 38	4						K	
	(A=*2007.02)										
8	1	129271-49220	PIPE, COOLING WATER	1						W	
	(A=*2007.02)										
9	1	129271-49110	RETAINER, PIPE	1						W	
	(A=*2009.06)										

N:Old $\frac{\text{Yes}}{\text{No}}$ New, Q:Old $\frac{\text{No}}{\text{Yes}}$ New, R:Old $\frac{\text{Yes}}{\text{Yes}}$ New, S:Old $\frac{\text{No}}{\text{No}}$ New, W:Add, Z:Discontinued, F:Interchangeable by set, K:Q'ty Change

Copyright (C) 2014 YANMAR CO., LTD. All RightsReserved.

Fig.22. COOLING SEA WATER STRAINER(OPTIONAL)

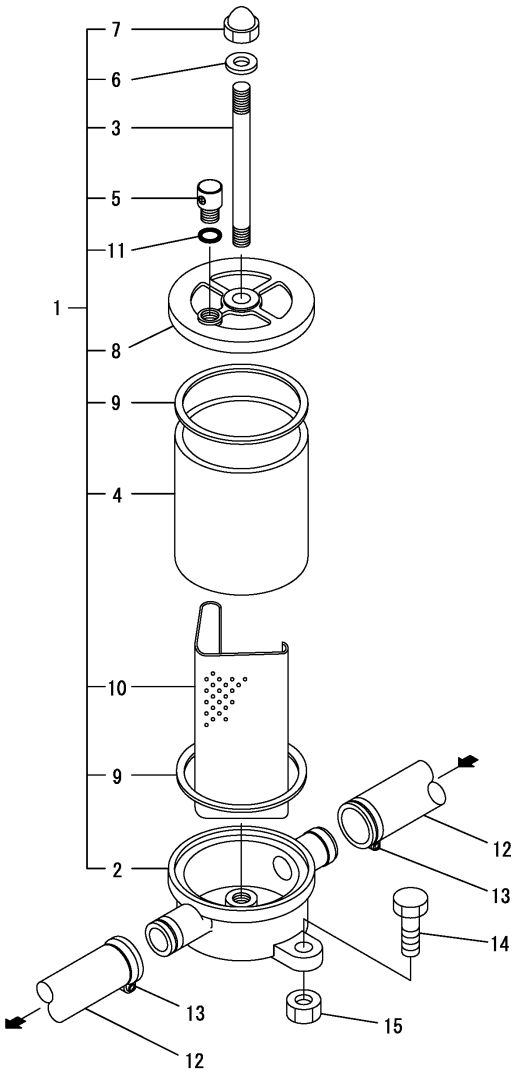

(A)=3JH4E (D)=
(B)= (E)=
(C)= (F)=

No.	Lev.	Parts No.	Description	Q'ty (A)	(B)	(C)	(D)	(E)	(F)	I	R
1	1	129795-48800	STRAINER	1							
2	2	XTST25S001	BODY	1							
3	2	XTST25S002	BOLT M 8X125	1							
4	2	XTST25S003	PIPE, OUTER	1							
5	2	XTST25S004	PLUG M 8	1							
6	2	XTST25S005	PACKING	1							
7	2	26664-080002	NUT, CAP M8	1							
8	2	XTST25S007	COVER	1							
9	2	XTST25S008	PACKING	2							
10	2	XTST25S009	FILTER	1							
11	2	24311-000060	O-RING, 1AP6.0	1							
12	1	23072-101000	HOSE, 10X1000	1							
13	1	129670-49500	CLIP, HOSE 38	2							
14	1	26116-080302	BOLT, M8X 30 PLATED	2							
15	1	26703-080002	NUT, M8	2							

N:Old $\overset{\text{Yes}}{\underset{\text{No}}{\leftrightarrows}}$ New, Q:Old $\overset{\text{No}}{\underset{\text{Yes}}{\leftrightarrows}}$ New, R:Old $\overset{\text{Yes}}{\underset{\text{Yes}}{\leftrightarrows}}$ New, S:Old $\overset{\text{No}}{\underset{\text{No}}{\leftrightarrows}}$ New, W:Add, Z:Discontinued, F:Interchangeable by set, K:Q'ty Change

Copyright (C) 2014 YANMAR CO., LTD. All RightsReserved.

Fig.23. BILGE PUMP(STD)(OPTIONAL)

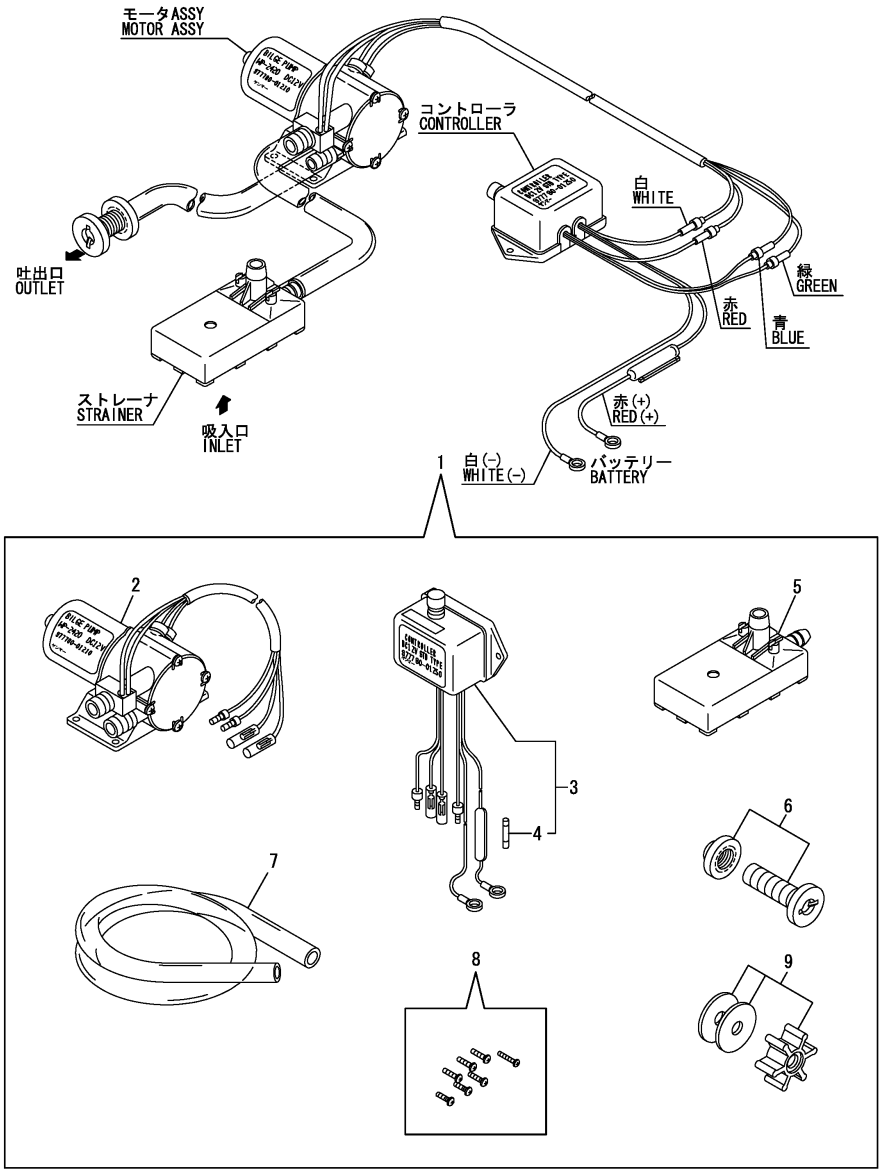

(A)=3JH4E (D)=
(B)= (E)=
(C)= (F)=

No.	Lev.	Parts No.	Description	Q'ty (A)	(B)	(C)	(D)	(E)	(F)	I	R
1	1	977780-01210	PUMP(12V).BILGE	1							
1-1	1	977780-01211	PUMP ASSY, BILGE	1						N	1
	(A=*1997.01)										
2	2	977780-01230	MOTOR ASSY(BILG PUMP	1							
3	2	977780-01250	CONTROLLER	1							
4	3	X8636008003	FUSE	1							
5	2	X179100021X	STRAINER	1							
6	2	X179100100X	PIPE ASSY	1							
7	2	X0044021509	HOSE A	1							
8	2	X199903800X	SCREW KIT	1							
9	2	977780-03000	INPELLER	1							

Remarks
(1)Inner parts are shown in Fig.48(24A).

N:Old $\overset{\text{Yes}}{\underset{\text{No}}{\leftrightarrow}}$ New, Q:Old $\overset{\text{No}}{\underset{\text{Yes}}{\leftrightarrow}}$ New, R:Old $\overset{\text{Yes}}{\underset{\text{Yes}}{\leftrightarrow}}$ New, S:Old $\overset{\text{No}}{\underset{\text{No}}{\leftrightarrow}}$ New, W:Add, Z:Discontinued, F:Interchangeable by set, K:Q'ty Change

Copyright (C) 2014 YANMAR CO., LTD. All RightsReserved.

Fig.24. BILGE PUMP(DX)(OPTIONAL)

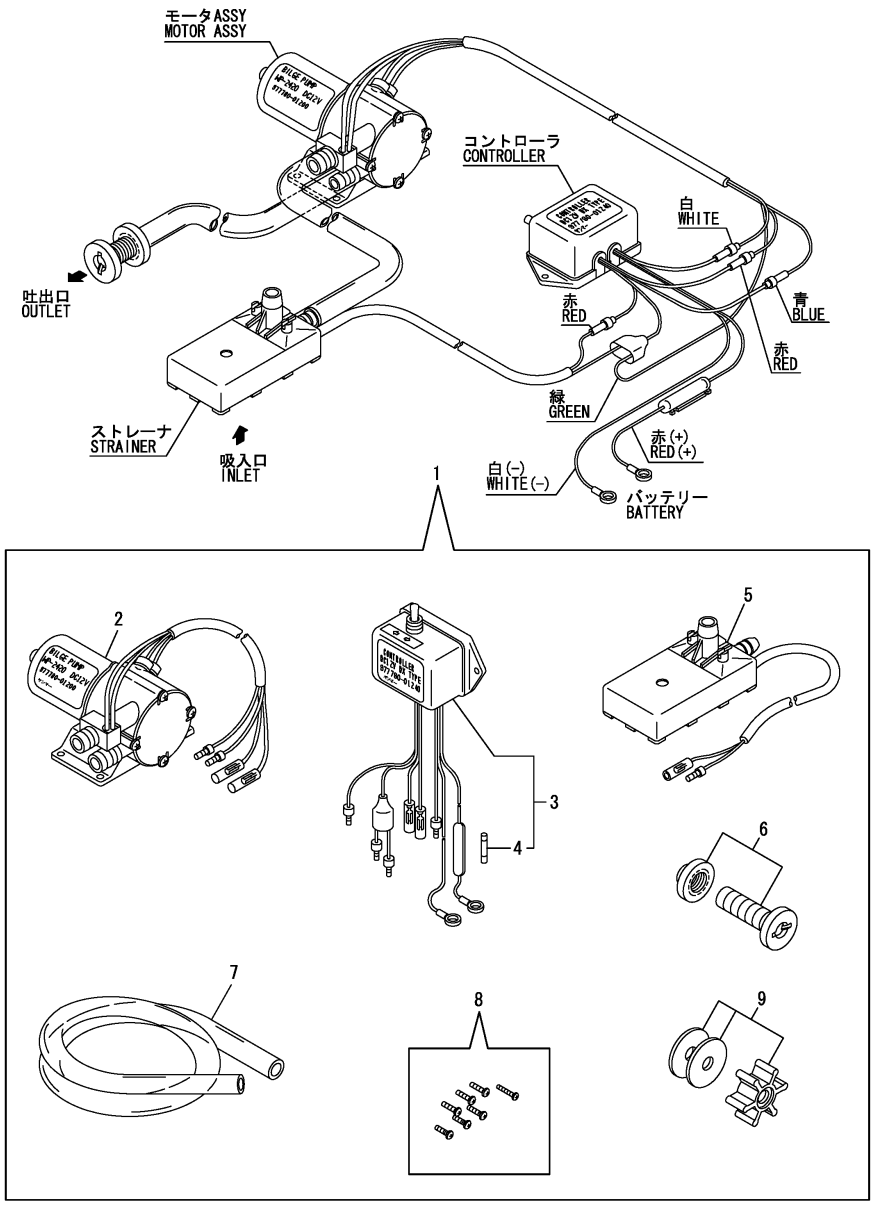

(A)=3JH4E (D)=
(B)= (E)=
(C)= (F)=

No.	Lev.	Parts No.	Description	Q'ty (A)	(B)	(C)	(D)	(E)	(F)	I	R
1	1	977780-01200	PUMP(12V).BILGE	1							
1-1	1	977780-01211	PUMP ASSY, BILGE	1						N	1
	(A=*1997.01)										
2	2	977780-01230	MOTOR ASSY(BILG PUMP	1							
3	2	977780-01240	CONTROLLER	1							
4	3	X8636008003	FUSE	1							
5	2	X179100011X	STRAINER	1							
6	2	X179100100X	PIPE ASSY	1							
7	2	X0044021509	HOSE A	1							
8	2	X199903800X	SCREW KIT	1							
9	2	977780-03000	INPELLER	1							

Remarks
(1)Inner parts are shown in Fig.48(24A).

N:Old $\xleftarrow[\text{No}]{\text{Yes}}$ New, Q:Old $\xleftarrow[\text{Yes}]{\text{No}}$ New, R:Old $\xleftarrow[\text{Yes}]{\text{Yes}}$ New, S:Old $\xleftarrow[\text{No}]{\text{No}}$ New, W:Add, Z:Discontinued, F:Interchangeable by set, K:Q'ty Change

Copyright (C) 2014 YANMAR CO., LTD. All RightsReserved.

Fig.48. (24A)BILGE PUMP(OPTIONAL)

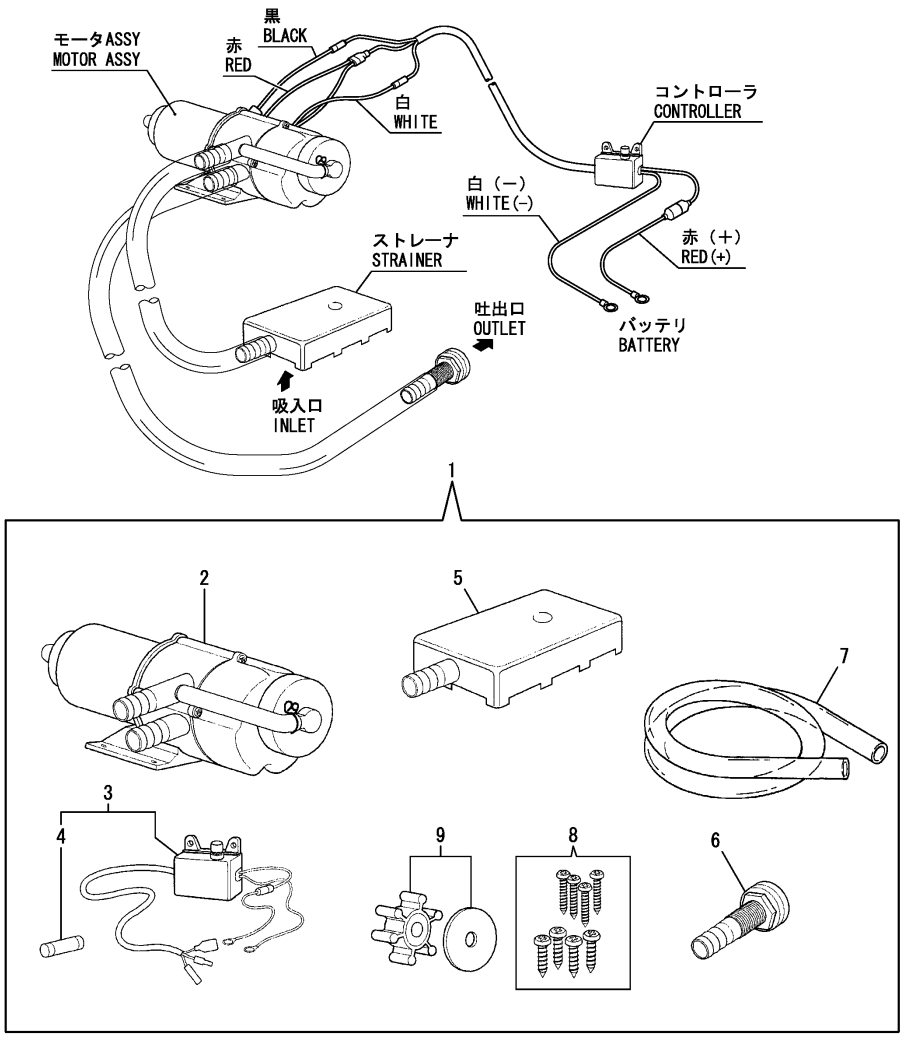

(A)=3JH4E (D)=
(B)= (E)=
(C)= (F)=

No.	Lev.	Parts No.	Description	Q'ty (A)	(B)	(C)	(D)	(E)	(F)	I	R
1	1	977780-01211	PUMP ASSY, BILGE	1							
2	2	X0318101004	MOTOR ASSY, BILGE	1							
3	2	X158606410X	SWITH	1							
4	3	X8636015001	FUSE	1							
5	2	X179100022X	STRAINER	1							
6	2	X179100100X	PIPE ASSY	1							
7	2	X0044021509	HOSE A	1							
8	2	X199906101X	SCREW SET	1							
9	2	977780-03000	INPELLER	1							

N:Old ◄Yes/No► New, Q:Old ◄No/Yes► New, R:Old ◄Yes/Yes► New, S:Old ◄No/No► New, W:Add, Z:Discontinued, F:Interchangeable by set, K:Q'ty Change

Copyright (C) 2014 YANMAR CO., LTD. All RightsReserved.

Fig.25. FUEL INJECTION PUMP

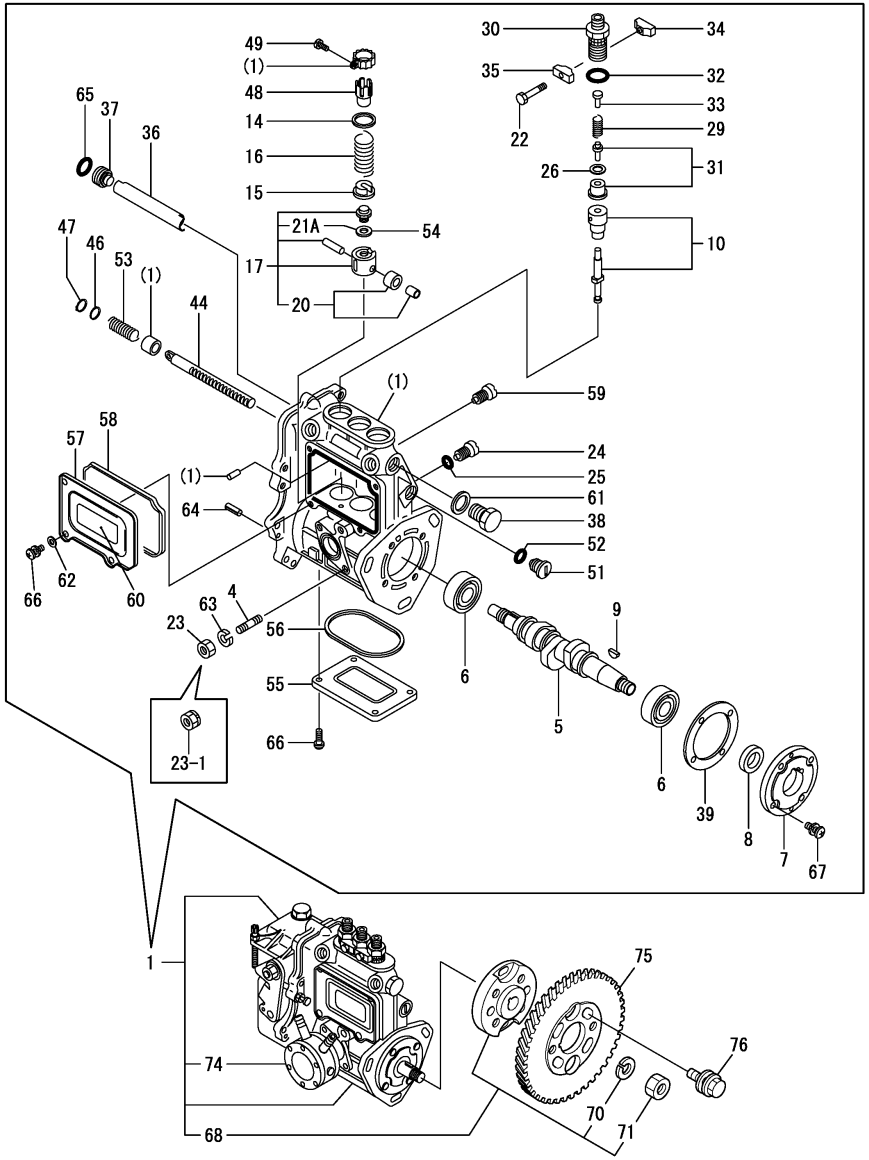

(A)=3JH4E (D)=
(B)= (E)=
(C)= (F)=

No.	Lev.	Parts No.	Description	Q'ty (A)	(B)	(C)	(D)	(E)	(F)	I	R
1	1	729271-51450	PUMP ASSY, INJECTION	1							1
4	3	129155-51020	STUD	2							
5	3	129171-51040	CAMSHAFT	1							
6	3	122710-51050	BEARING, HR30203J	2							
7	3	129486-51060	SUPPORT, CAMSHAFT	1							
8	3	129470-51080	SEAL, AF0741F0	1							
9	3	122710-51090	KEY	1							
10	3	129470-51101	PLUNGER ASSY	3							
14	3	174307-51170	RETAINER, SPRING A	3							
14-1	3	158600-51170	RETAINER, SPRING	3						R	
	(A=*2009.02)										
15	3	129155-51180	RETAINER, SPRING	3							
16	3	124950-51190	SPRING, PLUNGER	3							
17	3	129155-51200	TAPPET ASSY	3							
20	4	711100-51540	ROLLER ASSY	3							
21A	4	129155-51630	SHIM, T=1.2	3						W	
	(A=*2006.10)										
22	3	26116-050302	BOLT, M5X 30 PLATED	2							
23	3	26716-060002	NUT, M6	2							
23-1	3	119717-51860	NUT, M6	2						R	
	(A=*2010.01)										
24	3	129155-51270	STOPPER, TAPPET	3							
24-1	3	158600-51270	STOPPER, TAPPET	3						R	
	(A=*2009.10)										
25	3	129155-51280	O-RING, S6	3							
26	3	129670-51300	VALVE ASSY, DELIVERY	3							
29	3	129573-51330	SPRING, DELIVERY	3							
30	3	129573-51340	RETAINER	3							
31	3	124550-51350	GASKET, DELIVERY	3							
32	3	124550-51370	O-RING	3							
32-1	3	24316-000150	O-RING, 4DP15.0	3						N	
	(A=*2006.02)										
33	3	129573-51370	STOPPER, VALVE	3							
34	3	129155-51380	STOPPER	2							
35	3	129155-51390	STOPPER	2							
36	3	129155-51400	DEFLECTOR	1							
37	3	129155-51410	BOLT	1							
37-1	3	158600-51410	PLUG, DEFLECTOR	1						R	
	(A=E05638)										
38	3	129155-51420	PLUG, M16	1							
38-1	3	158600-51420	PLUG, DEFLECTOR	1						R	
	(A=E05638)										
39	3	129155-51450	SHIM SET, ADJUSTING	1							
44	3	129155-51500	RACK, CONTROL	1							
44-1	3	119717-51500	RACK, CONTROL	1						R	
	(A=*2005.05)										
46	3	129155-51530	SPACER	1							
47	3	129155-51540	CIRCLIP	1							
48	3	129155-51550	PINION, CONTROL	3							
49	3	129100-51570	SCREW	3							
51	3	129155-51570	PLUG, M12	1							

Remarks
(1)Governor(Fig.26) is incorporated in this Fuel Injection Pump(No.1).

N:Old $\xleftarrow[\text{No}]{\text{Yes}}$ New, Q:Old $\xleftarrow[\text{Yes}]{\text{No}}$ New, R:Old $\xleftarrow[\text{Yes}]{\text{Yes}}$ New, S:Old $\xleftarrow[\text{No}]{\text{No}}$ New, W:Add, Z:Discontinued, F:Interchangeable by set, K:Q'ty Change

++ CONTINUE ++

Copyright (C) 2014 YANMAR CO., LTD. All RightsReserved.

Fig.25. FUEL INJECTION PUMP

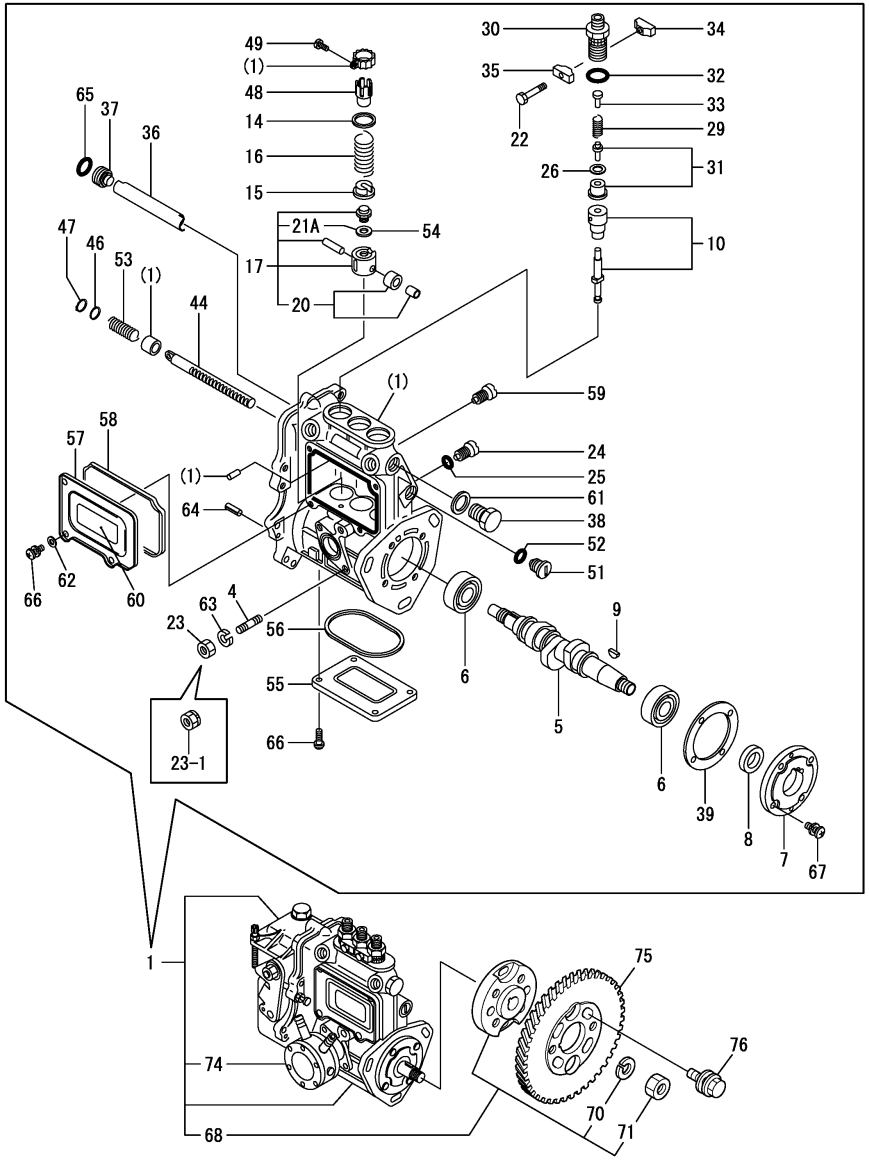

(A)=3JH4E (D)=
(B)= (E)=
(C)= (F)=

No.	Lev.	Parts No.	Description	Q'ty (A)	(B)	(C)	(D)	(E)	(F)	I	R
51-1	3	158600-51570	PLUG	1							R
	(A=*2009.10)										
52	3	129155-51580	O-RING	1							
53	3	129155-51591	SPRING, RACK	1							
53-1	3	129190-51590	SPRING, RACK	1							N
	(A=E00576)										
54	3	129155-51600	SHIM SET, ADJUSTING	3							Z
	(A=*2006.10)										
55	3	129155-51701	COVER	1							
56	3	129155-51711	GASKET	1							
57	3	129155-51751	COVER	1							
58	3	129155-51761	GASKET	1							
59	3	129155-51790	STOOPER, RACK	1							
59-1	3	158600-51790	STOOPER, RACK	1							R
	(A=*2009.10)										
60	3	129156-51910	LABEL, CAUTION	1							
61	3	22190-160002	WASHER, SEAL 16	1							
62	3	22217-050000	WASHER, SPRING 5	2							
63	3	22217-060000	WASHER, SPRING 6	2							Z
	(A=*2010.01)										
64	3	22351-050010	PIN, SPRING 5.0X10	2							
65	3	24341-000160	O-RING, 1AS16.0	1							
65-1	3	119717-51420	O-RING	1							N
	(A=*2006.02)										
66	3	26022-050122	SCREW, M5X12	8							
67	3	26022-060162	SCREW, M6X16	4							
68	3	129208-54500	FLANGE ASSY	1							
70	4	22217-120000	WASHER, SPRING 12	1							
71	4	26716-120002	NUT, M12	1							
74	2	129158-52000	PUMP ASSY, FUEL FEED	1							
75	1	129150-25931	GEAR, PUMP	1							
76	1	129150-25301	BOLT	4							

Remarks
(1)Governor(Fig.26) is incorporated in this Fuel Injection Pump(No.1).

N:Old ◄Yes/No► New, Q:Old ◄No/Yes► New, R:Old ◄Yes/Yes► New, S:Old ◄No/No► New, W:Add, Z:Discontinued, F:Interchangeable by set, K:Q'ty Change

Copyright (C) 2014 YANMAR CO., LTD. All RightsReserved.

Fig.26. GOVERNOR

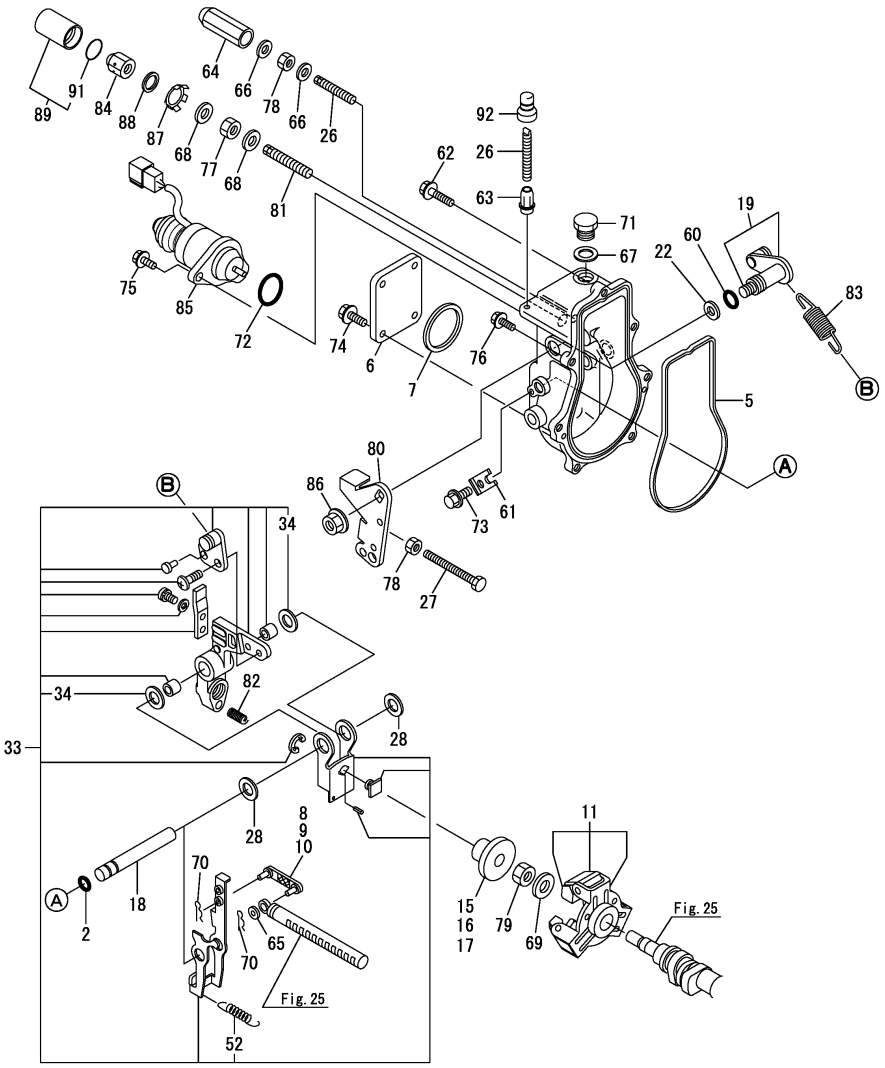

(A)=3JH4E (D)=
(B)= (E)=
(C)= (F)=

No.	Lev.	Parts No.	Description	Q'ty (A)	(B)	(C)	(D)	(E)	(F)	I	R
2	2	129155-51280	O-RING, S6	1							
5	2	129052-61051	GASKET	1							
6	2	129052-61060	COVER, GOVERNOR CASE	1							
7	2	129052-61071	GASKET	1							
8	2	129155-61120	LINK, L=30 MARK 0	1							1
9	2	129155-61130	LINK, L=31 MARK 1	1							1
10	2	129155-61140	LINK, L=30.5 MARK 05	1							1
11	2	129486-61201	WEIGHT ASSY,GOVERNOR	1							
11-1	2	129486-61202	WEIGHT ASSY,GOVERNOR	1						R	
	(A=*2010.03)										
15	2	129155-61341	SLEEVE	1						Z	2
	(A=*2008.05)										
16	2	129155-61350	SLEEVE, L=24.9	1						Z	2
	(A=*2008.05)										
17	2	129155-61360	SLEEVE, L=25.2	1							2
18	2	129052-61390	SHAFT	1							
19	2	129100-61400	SHAFT ASSY	1							
22	2	129155-61430	SPACER	1							
26	2	129155-61450	BOLT, LIMITER	2							
27	2	129155-61460	BOLT, IDLE	1							
28	2	129155-61480	SPACER ASSY	2							
33	2	119908-61501	LEVER ASSY, GOVERNOR	1							
34	3	174307-51700	SHIM SET	2							
52	3	129486-61540	SPRING, SET	1							
60	2	129155-61830	O-RING, S10	1							
61	2	119660-61901	RETAINER, SHAFT	1							
62	2	129155-61950	BOLT	1							
63	2	129209-61370	NUT, M6	1							
64	2	119600-66840	NUT, CAP	1							
65	2	22117-040000	WASHER, 4	1							
66	2	22190-060003	SEAL WASER 6	2							
67	2	22190-100002	WASHER, SEAL 10	1							
68	2	22190-120002	WASHER, SEAL 12	2							
69	2	22287-120000	WASHER, 12	1							
70	2	22372-040000	PIN, SNAP 4	2							
71	2	23887-100002	PLUG, 10	1							
72	2	24341-000280	O-RING, 1AS28.0	1							
72-1	2	158552-61900	O-RING	1						N	
	(A=E03678)										
73	2	26106-060102	BOLT, M6X 10 PLATED	1							
74	2	26106-060102	BOLT, M6X 10 PLATED	4							
75	2	26106-060142	BOLT, M6X 14 PLATED	2							
76	2	26106-060202	BOLT, M6X 20 PLATED	6							
77	2	26736-120002	NUT, M12	1							
77-1	2	129209-61920	NUT, ARB	1						R	
	(A=E07164)										
78	2	26756-060002	NUT, LOCK M6	2							
79	2	26776-120002	NUT, LOCK M12	1							
80	2	129100-61440	LEVER, CONTROL	1							
81	2	120323-61470	BOLT, CONTROL	1							
82	2	129470-61650	SPRING, FUEL CONTROL	1							

Remarks
(1)Selective parts.
Certain the classification mark, then place your order(Refer to illustration).
(2)Selective parts.

N:Old $\xleftarrow[\text{No}]{\text{Yes}}$ New, Q:Old $\xleftarrow[\text{Yes}]{\text{No}}$ New, R:Old $\xleftarrow[\text{Yes}]{\text{Yes}}$ New, S:Old $\xleftarrow[\text{No}]{\text{No}}$ New, W:Add, Z:Discontinued, F:Interchangeable by set, K:Q'ty Change

++ CONTINUE ++

Copyright (C) 2014 YANMAR CO., LTD. All RightsReserved.

Fig.26. GOVERNOR

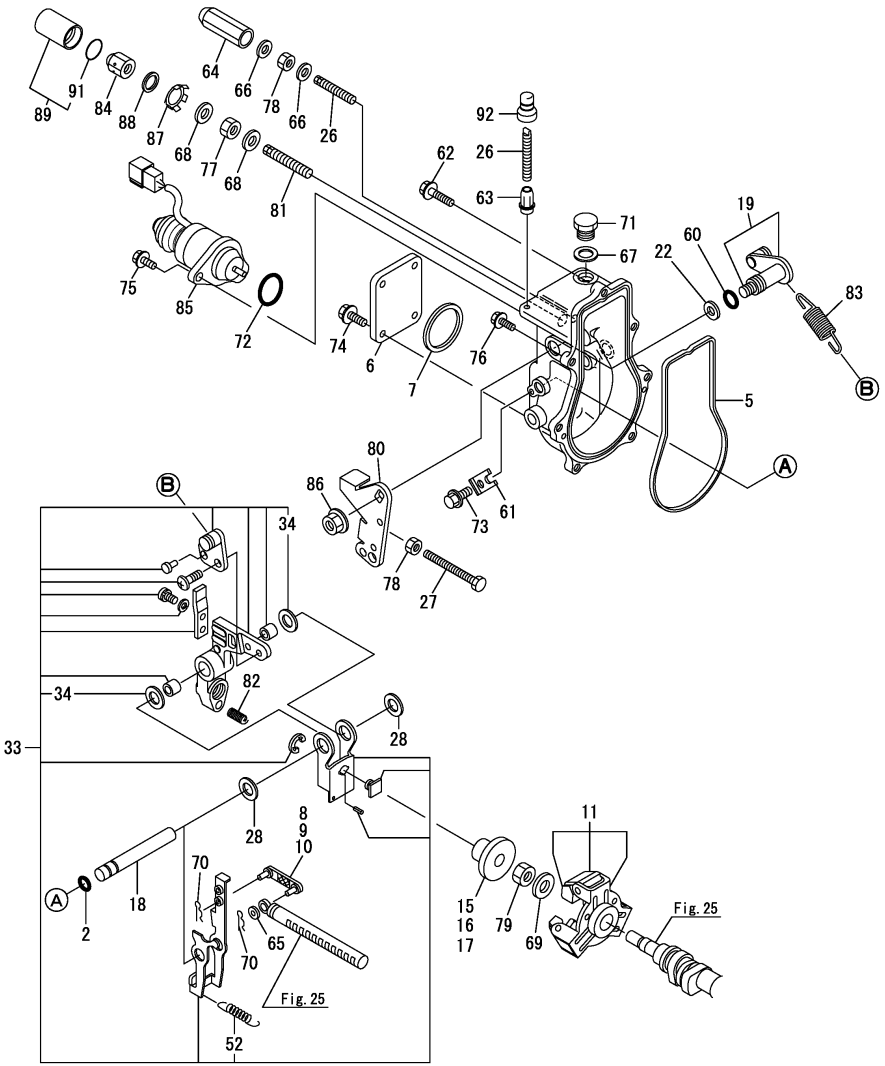

Remarks
(1)Selective parts.
Certain the classification mark, then place your order(Refer to illustration).
(2)Selective parts.

(A)=3JH4E (D)=
(B)= (E)=
(C)= (F)=

No.	Lev.	Parts No.	Description	Q'ty (A)	(B)	(C)	(D)	(E)	(F)	I	R
82-1	2	119800-61650	SPRING, FUEL CONTROL	1						R	
	(A=E00576)										
83	2	171353-61700	SPRING, GOVERNOR	1							
84	2	129209-61930	NUT, CAP	1							
85	2	129271-77950	SOLENOID, STOP	1							
86	2	26366-080002	NUT, M8	1							
87	2	129209-61970	PLATE	1							
88	2	23414-120016	GASKET, 12X1.0	1							
89	1	129209-61940	CASE ASSY	1							
91	2	24311-000150	O-RING, 1AP15.0	1							
92	1	119285-66610	CAP, HIGH-IDLE	1							

N:Old ←Yes/No→ New, Q:Old ←No/Yes→ New, R:Old ←Yes/Yes→ New, S:Old ←No/No→ New, W:Add, Z:Discontinued, F:Interchangeable by set, K:Q'ty Change

Copyright (C) 2014 YANMAR CO., LTD. All RightsReserved.

Fig.27. FUEL FEED PUMP

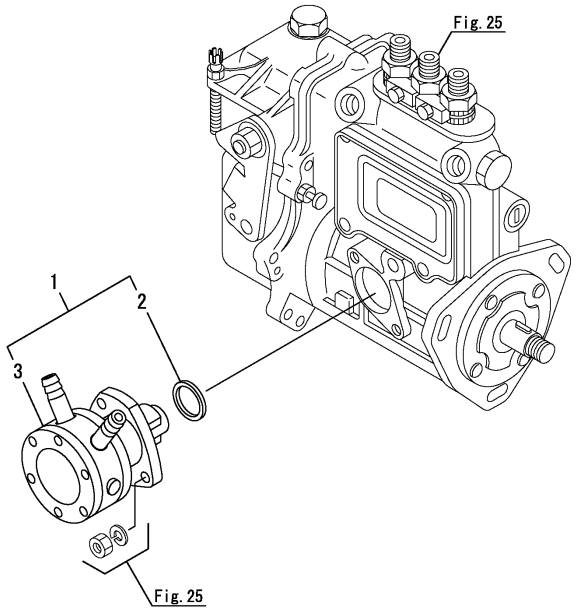

(A)=3JH4E (D)=
(B)= (E)=
(C)= (F)=

No.	Lev.	Parts No.	Description	Q'ty (A)	(B)	(C)	(D)	(E)	(F)	I	R
1	2	129158-52000	PUMP ASSY, FUEL FEED	1							
2	3	129155-52051	GASKET	1							
3	3	129158-52100	PUMP ASSY, FUEL FEED	1							
3-1	3	129158-52101	PUMP ASSY, FUEL FEED	1						N	
	(A=E01544)										

N:Old $\xleftrightarrow[\text{No}]{\text{Yes}}$ New, Q:Old $\xleftrightarrow[\text{Yes}]{\text{No}}$ New, R:Old $\xleftrightarrow[\text{Yes}]{\text{Yes}}$ New, S:Old $\xleftrightarrow[\text{No}]{\text{No}}$ New, W:Add, Z:Discontinued, F:Interchangeable by set, K:Q'ty Change

Copyright (C) 2014 YANMAR CO., LTD. All RightsReserved.

Fig.28. FUEL INJECTION VALVE

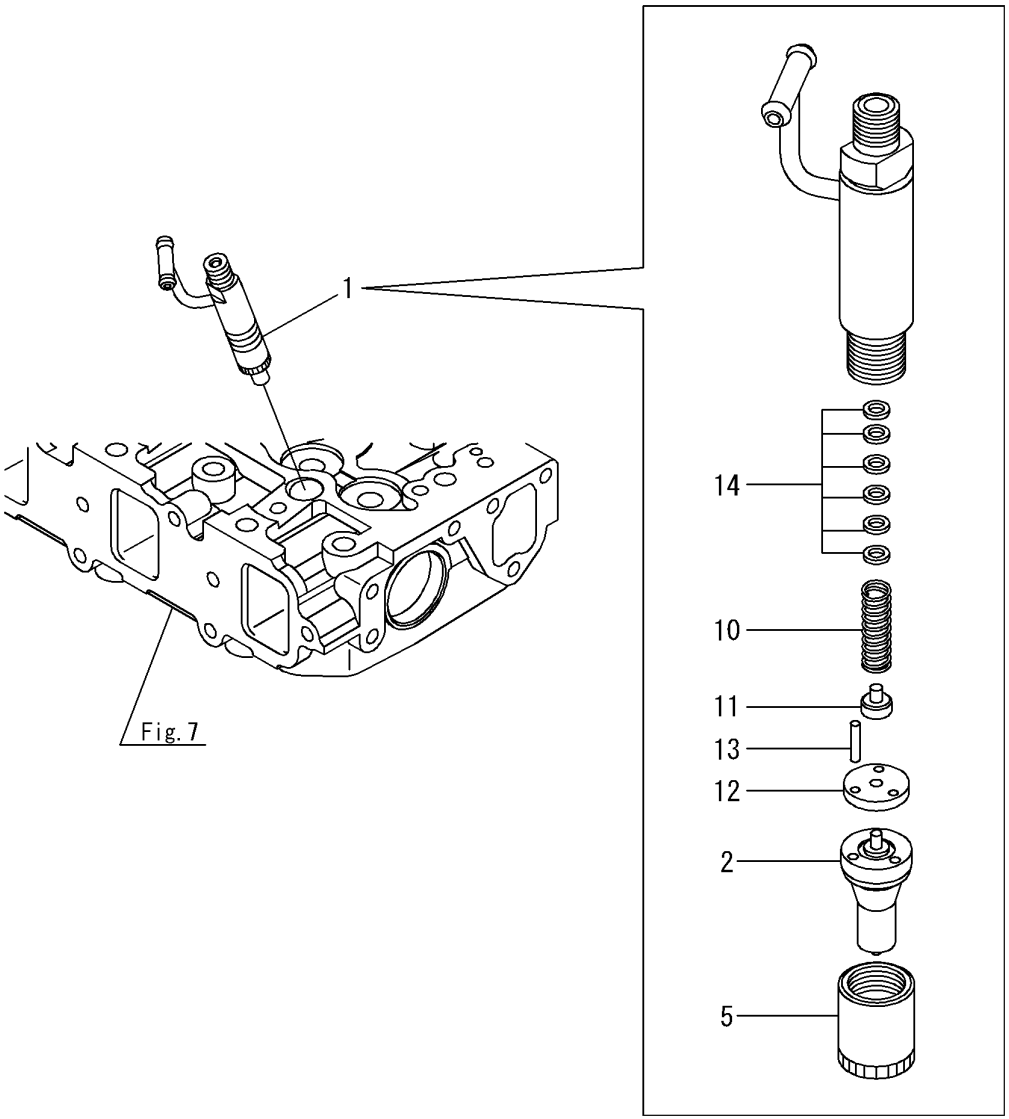

(A)=3JH4E (D)=
(B)= (E)=
(C)= (F)=

No.	Lev.	Parts No.	Description	Q'ty (A)	(B)	(C)	(D)	(E)	(F)	I	R
1	1	729602-53101	VALVE ASSY,INJECTION	3							
2	2	129602-53001	VALVE ASSY,INJECTION	3							
5	2	114250-53080	NUT, NOZZLE D16.95	3							
10	2	114250-53120	SPRING, NOZZLE	3							
11	2	114250-53130	SEAT, SPRING	3							
12	2	114250-53140	PLATE	3							
13	2	114250-53210	PIN	6							
14	2	114250-53400	SHIM SET	3							
14-1	2	119803-53400	SHIM SET	3						R	

(A=E06984)

N:Old $\xleftrightarrow[\text{No}]{\text{Yes}}$ New, Q:Old $\xleftrightarrow[\text{Yes}]{\text{No}}$ New, R:Old $\xleftrightarrow[\text{Yes}]{\text{Yes}}$ New, S:Old $\xleftrightarrow[\text{No}]{\text{No}}$ New, W:Add, Z:Discontinued, F:Interchangeable by set, K:Q'ty Change

Copyright (C) 2014 YANMAR CO., LTD. All RightsReserved.

Fig.29. FUEL INJECTION PIPE

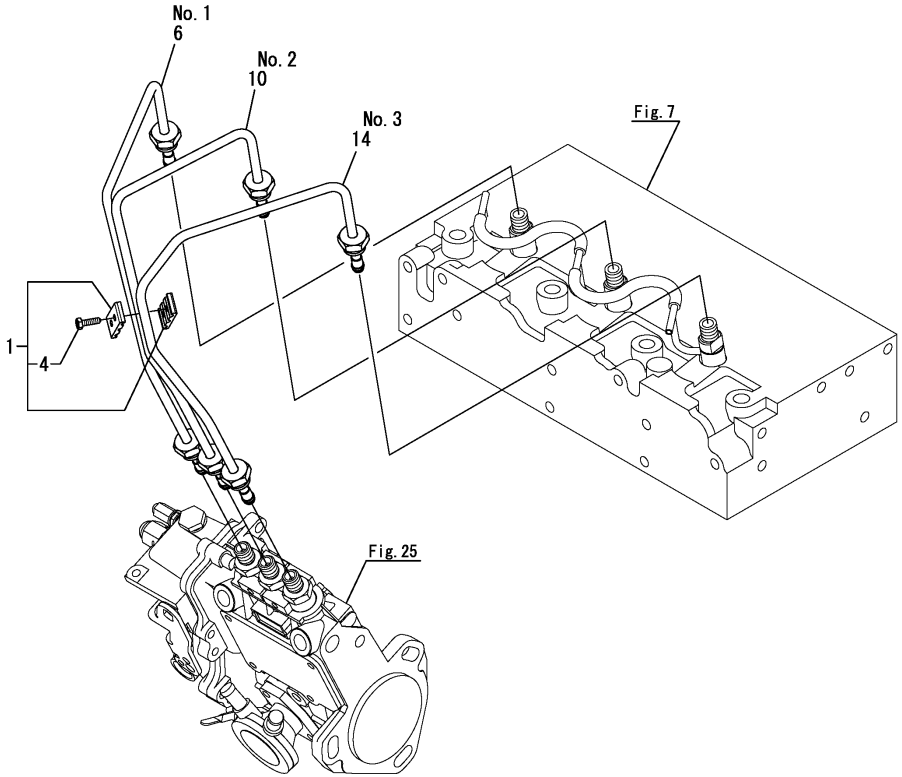

(A)=3JH4E (D)=
(B)= (E)=
(C)= (F)=

No.	Lev.	Parts No.	Description	Q'ty (A)	(B)	(C)	(D)	(E)	(F)	I	R
1	1	129150-59120	RETAINER, PIPE	1							
4	2	129150-59131	BOLT, M4X14	2							
6	1	129271-59810	PIPE ASSY, INJECTION	1							
10	1	129271-59820	PIPE ASSY, INJECTION	1							
14	1	129271-59830	PIPE ASSY, INJECTION	1							

N:Old $\xleftrightarrow[\text{No}]{\text{Yes}}$ New, Q:Old $\xleftrightarrow[\text{Yes}]{\text{No}}$ New, R:Old $\xleftrightarrow[\text{Yes}]{\text{Yes}}$ New, S:Old $\xleftrightarrow[\text{No}]{\text{No}}$ New, W:Add, Z:Discontinued, F:Interchangeable by set, K:Q'ty Change

Copyright (C) 2014 YANMAR CO., LTD. All RightsReserved.

Fig.30. FUEL PIPE & FUEL STRAINER

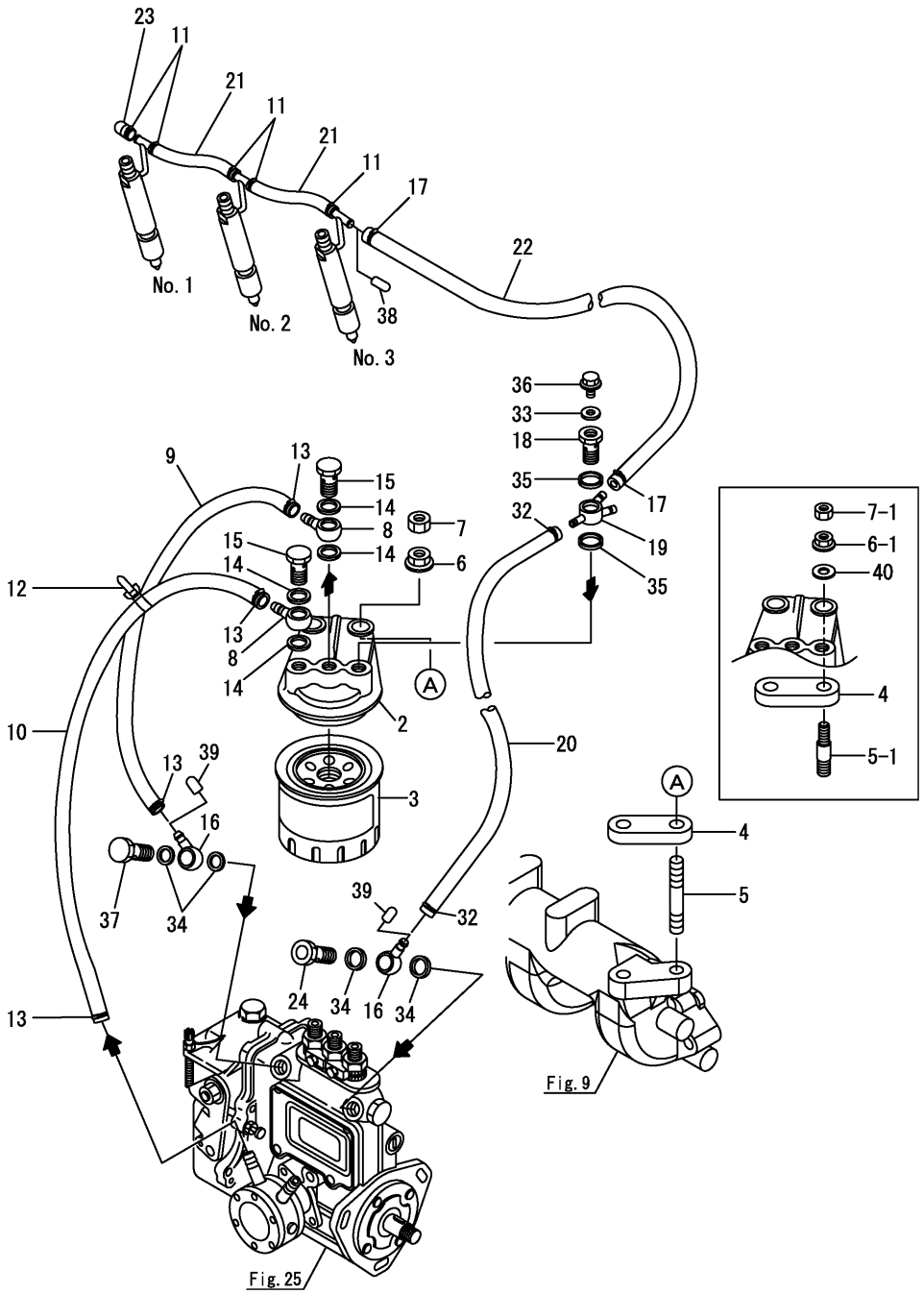

(A)=3JH4E (D)=
(B)= (E)=
(C)= (F)=

No.	Lev.	Parts No.	Description	Q'ty (A)	(B)	(C)	(D)	(E)	(F)	I	R
2	1	129470-55610	BODY, STRAINER	1							
3	1	129470-55810	FILTER, FUEL	1							
4	1	119173-55700	RUBBER	1							
4-1	1	129670-55700	RUBBER	1						R	
	(A=*2005.06)										
5	1	26216-100402	STUD, M10X 40	2							
5-1	1	129271-55660	BOLT,FO FILTER BRK	2						S	
	(A=*2005.03)										
6	1	26306-100002	NUT, M10	2							
6-1	1	26306-080002	NUT, M8	2						S	
	(A=*2005.03)										
7	1	26716-100002	NUT, M10	2							
7-1	1	26716-080002	NUT, M8	2						S	
	(A=*2005.03)										
8	1	101304-59020	JOINT, PIPE 12	2							
9	1	129470-59122	PIPE, FUEL	1							
9-1	1	129670-59120	PIPE, FUEL OIL	1						R	
	(A=*2005.05)										
10	1	129570-59121	PIPE, FUEL	1							
10-1	1	129670-59130	PIPE, FUEL OIL	1						R	
	(A=*2005.05)										
11	1	23000-013000	CLAMP, 13	5							
12	1	121750-59890	BAND, NYLON	1							
13	1	23000-016000	CLAMP, 16	4							
14	1	22190-120002	WASHER, SEAL 12	4							
15	1	23857-060000	BOLT, JOINT 6	2							
16	1	101304-59020	JOINT, PIPE 12	2							
17	1	23000-013000	CLAMP, 13	2							
18	1	129495-59300	BOLT, PIPE JOINT	1							
18-1	1	129271-59300	BOLT, JOINT	1						R	
	(A=*2007.02)										
19	1	129470-59530	JOINT, PIPE	1							
19-1	1	129271-59530	JOINT	1						R	
	(A=*2007.02)										
20	1	129470-59542	PIPE, FUEL	1							
20-1	1	128990-59540	PIPE,FUEL	1						R	
	(A=*2005.05)										
21	1	129270-59550	PIPE, FUEL	2							
22	1	129470-59562	PIPE, FUEL	1							
22-1	1	129670-59560	PIPE, FUEL OIL	1						R	
	(A=*2005.05)										
23	1	129270-59580	CAP	1							
24	1	129100-59951	VALVE ASSY, CHECK	1							
24-1	1	119813-59950	VALVE ASSY, CHECK	1						N	
	(A=E00576)										
32	1	23000-016000	CLAMP, 16	2							
33	1	22190-080002	WASHER, SEAL 8	1							
34	1	22190-120002	WASHER, SEAL 12	4							
35	1	22190-140002	WASHER, SEAL 14	2							
36	1	26106-080102	BOLT, M8X 10 PLATED	1							
37	1	23857-060000	BOLT, JOINT 6	1							

N:Old $\xleftarrow[\text{No}]{\text{Yes}}$ New, Q:Old $\xleftarrow[\text{Yes}]{\text{No}}$ New, R:Old $\xleftarrow[\text{Yes}]{\text{Yes}}$ New, S:Old $\xleftarrow[\text{No}]{\text{No}}$ New, W:Add, Z:Discontinued, F:Interchangeable by set, K:Q'ty Change

++ CONTINUE ++

Copyright (C) 2014 YANMAR CO., LTD. All RightsReserved.

Fig.30. FUEL PIPE & FUEL STRAINER

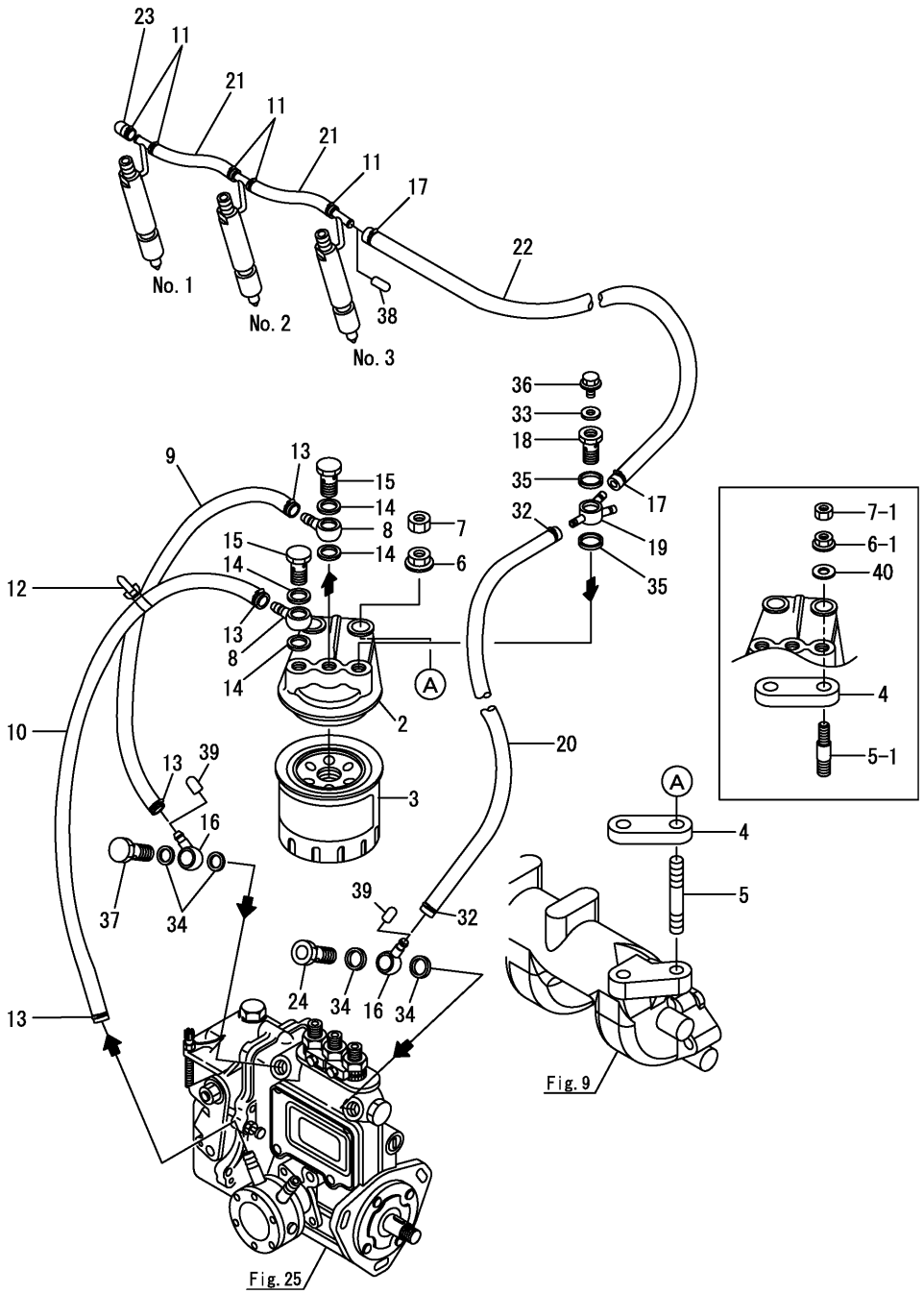

(A)=3JH4E (D)=
(B)= (E)=
(C)= (F)=

No.	Lev.	Parts No.	Description	Q'ty (A)	(B)	(C)	(D)	(E)	(F)	I	R
38	1	129150-59580	CAP	1							
39	1	129461-59580	CAP, FUEL OIL	2							
40	1	22137-080000	WASHER, 8	2						W	

(A=*2005.03)

N:Old ◄Yes/No► New, Q:Old ◄No/Yes► New, R:Old ◄Yes/Yes► New, S:Old ◄No/No► New, W:Add, Z:Discontinued, F:Interchangeable by set, K:Q'ty Change

Copyright (C) 2014 YANMAR CO., LTD. All RightsReserved.

Fig.31. FUEL TANK(OPTIONAL)

(A)=3JH4E (D)=
(B)= (E)=
(C)= (F)=

No.	Lev.	Parts No.	Description	Q'ty (A)	(B)	(C)	(D)	(E)	(F)	I	R
1	1	124070-59060	PIPE ASSY, FUEL	1							
1-1	1	128990-59700	PIPE ASSY, FUEL	1						N	
	(A=*2004.02)										
2	2	124070-59130	PIPE, FUEL 2M	1							
2-1	2	128990-59131	PIPE, FUEL	1						N	
	(A=*2004.02)										
4	2	138603-59380	CAP NUT	1							
5	2	23010-014000	CLAMP, 14	2							
7	1	83213-003012	TANK ASSY, FUEL OIL	1							
8	2	105430-55041	CAP ASSY	1							

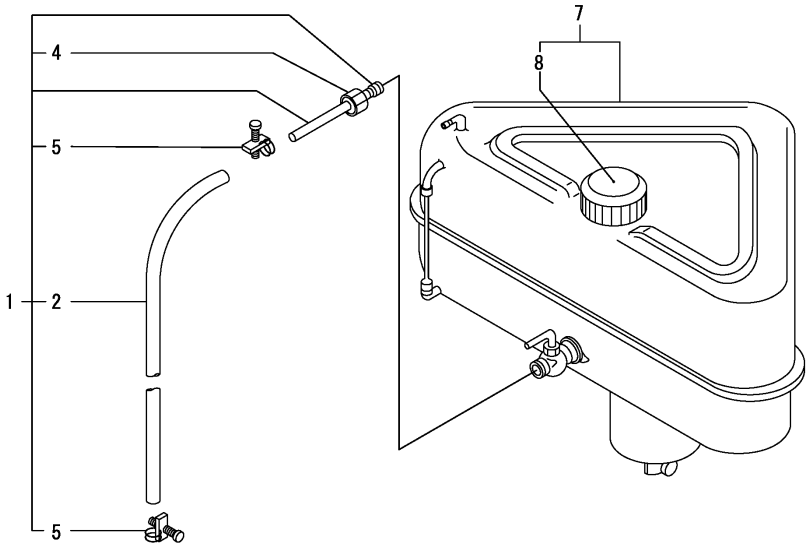

N:Old $\xleftarrow[\text{No}]{\text{Yes}}$ New, Q:Old $\xleftarrow[\text{Yes}]{\text{No}}$ New, R:Old $\xleftarrow[\text{Yes}]{\text{Yes}}$ New, S:Old $\xleftarrow[\text{No}]{\text{No}}$ New, W:Add, Z:Discontinued, F:Interchangeable by set, K:Q'ty Change

Copyright (C) 2014 YANMAR CO., LTD. All RightsReserved.

Fig.32. CABLE SUPPORT

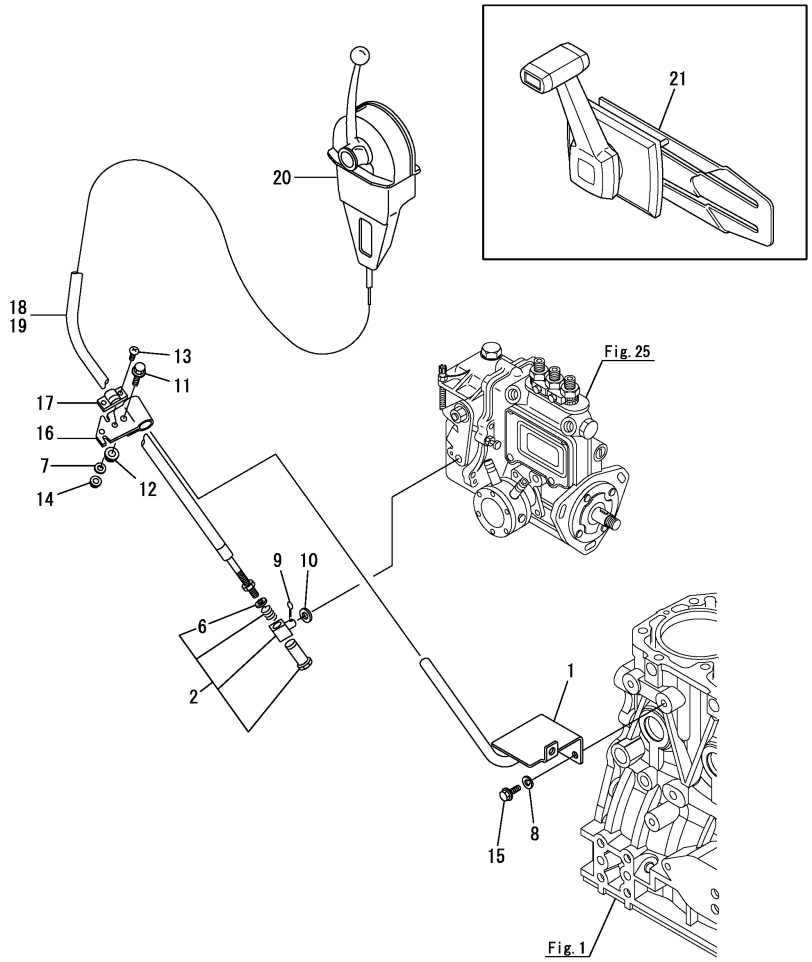

(A)=3JH4E (D)=
(B)= (E)=
(C)= (F)=

No.	Lev.	Parts No.	Description	Q'ty (A)	(B)	(C)	(D)	(E)	(F)	I	R
1	1	129271-67100	BRACKET, GOVERNOR	1							
2	1	129470-67200	RETAINER ASSY	1							
6	2	22242-000100	RING, 10	1							
7	1	22217-050000	WASHER, SPRING 5	2							
8	1	22217-080000	WASHER, SPRING 8	2							
9	1	22414-250150	PIN, COTTER 2.5X15	1							
10	1	23414-080000	GASKET, 8X1.0	1							
11	1	26106-080252	BOLT, M8X 25 PLATED	1							
12	1	26306-080002	NUT, M8	1							
13	1	26557-050122	SCREW, M5X12	2							
14	1	26716-050002	NUT, M5	2							
15	1	26106-080122	BOLT, M8X 12 PLATED	2							
16	1	41701-001720	BRACKET	1							
16-1	1	129670-67110	BRACKET	1						R	
	(A=*2006.01)										
17	1	41710-000410	CLAMP	1							
18	1	41710-000380	CABLE L=4000	2							1
18-1	1	27730-301400	CABLE (L=4000)	2						R	1
	(A=*2012.07)										
19	1	129470-86500	CABLE, L=7000	2							1
20	1	41730-000681	MT-3 REMO-CON	1							1
21	1	128170-86501	REMOCON HEAD (MN	1							1

Remarks
(1)Optional parts.

N:Old $\xleftarrow[\text{No}]{\text{Yes}}$ New, Q:Old $\xleftarrow[\text{Yes}]{\text{No}}$ New, R:Old $\xleftarrow[\text{Yes}]{\text{Yes}}$ New, S:Old $\xleftarrow[\text{No}]{\text{No}}$ New, W:Add, Z:Discontinued, F:Interchangeable by set, K:Q'ty Change

Copyright (C) 2014 YANMAR CO., LTD. All RightsReserved.

Fig.33. CLUTCH

(A)=3JH4E
(B)=
(C)=
(D)=
(E)=
(F)=

No.	Lev.	Parts No.	Description	Q'ty (A)	(B)	(C)	(D)	(E)	(F)	I	R
1	1	129270-81120	CLUTCH ASSY, I=2.61	1							
2	1	129270-81110	CLUTCH ASSY, 2.36	1							
3	1	129270-81170	CLUTCH ASSY, 2.33	1							
4	1	129270-81180	CLUTCH ASSY, I=2.64	1							
5	1	128170-13600	STUD, M8X31	2							
5-1	1	129670-13600	STUD	2						R	
	(A=*2006.07)										
6	1	26106-080202	BOLT, M8X 20 PLATED	6							
7	1	26366-080002	NUT, M8	2							
8	1	129670-77800	CLUTCH ASSY	1						W	
	(A=*2007.01)										
9	1	129670-77810	CLUTCH ASSY	1						W	
	(A=*2007.01)										
10	1	129670-77820	CLUTCH ASSY	1						W	
	(A=*2007.01)										
11	1	129670-77830	CLUTCH ASSY	1						W	
	(A=*2007.01)										

Remarks
* This figure are not illustrated.

N:Old $\xleftrightarrow[\text{No}]{\text{Yes}}$ New, Q:Old $\xleftrightarrow[\text{Yes}]{\text{No}}$ New, R:Old $\xleftrightarrow[\text{Yes}]{\text{Yes}}$ New, S:Old $\xleftrightarrow[\text{No}]{\text{No}}$ New, W:Add, Z:Discontinued, F:Interchangeable by set, K:Q'ty Change

Copyright (C) 2014 YANMAR CO., LTD. All RightsReserved.

Fig.34. COUPLING(OPTIONAL)

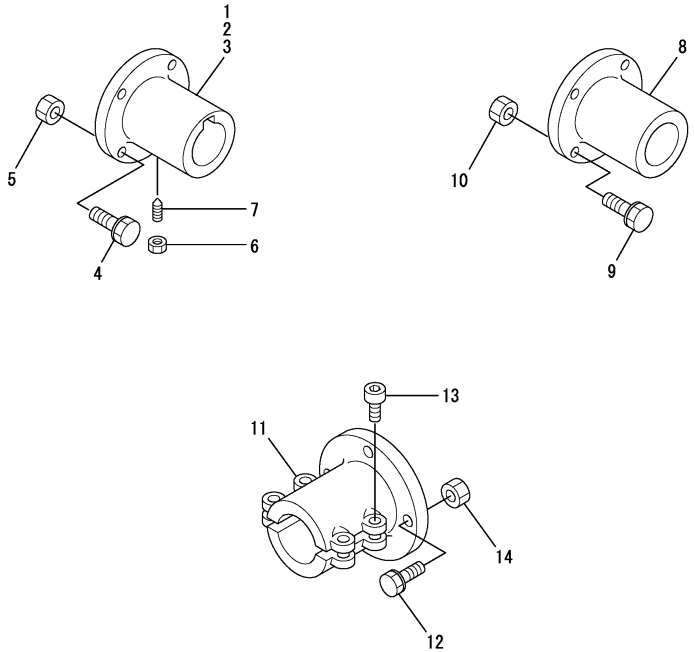

(A)=3JH4E (D)=
(B)= (E)=
(C)= (F)=

No.	Lev.	Parts No.	Description	Q'ty (A)	(B)	(C)	(D)	(E)	(F)	I	R
1	1	48110-032502	COUPLING, 30	1							1
2	1	129171-85900	COUPLING, TAPER 32	1							1
3	1	129670-85900	COUPLING, TAPER 34	1							1
4	1	26106-100322	BOLT, M10X 32 PLATED	4							
5	1	26706-100002	NUT, M10	4							
6	1	26756-080002	NUT, LOCK M8	1							
7	1	48110-032411	SCREW	1							
8	1	105583-85900	COUPLING, 22	1							2
9	1	26106-100322	BOLT, M10X 32 PLATED	4							
10	1	26706-100002	NUT, M10	4							
11	1	104214-83980	COUPLING	1							3
12	1	26106-100322	BOLT, M10X 32 PLATED	4							
13	1	26450-080282	BOLT, M8X 28	4							
13-1	1	26450-080302	BOLT, M8X 30	4						R	
	(A=*2008.01)										
14	1	26706-100002	NUT, M10	4							

Remarks
(1)Taper type
(2)Straight type
(3)Slit type.

N:Old $\xleftrightarrow[\text{No}]{\text{Yes}}$ New, Q:Old $\xleftrightarrow[\text{Yes}]{\text{No}}$ New, R:Old $\xleftrightarrow[\text{Yes}]{\text{Yes}}$ New, S:Old $\xleftrightarrow[\text{No}]{\text{No}}$ New, W:Add, Z:Discontinued, F:Interchangeable by set, K:Q'ty Change

Copyright (C) 2014 YANMAR CO., LTD. All RightsReserved.

Fig.35. STARTING MOTOR

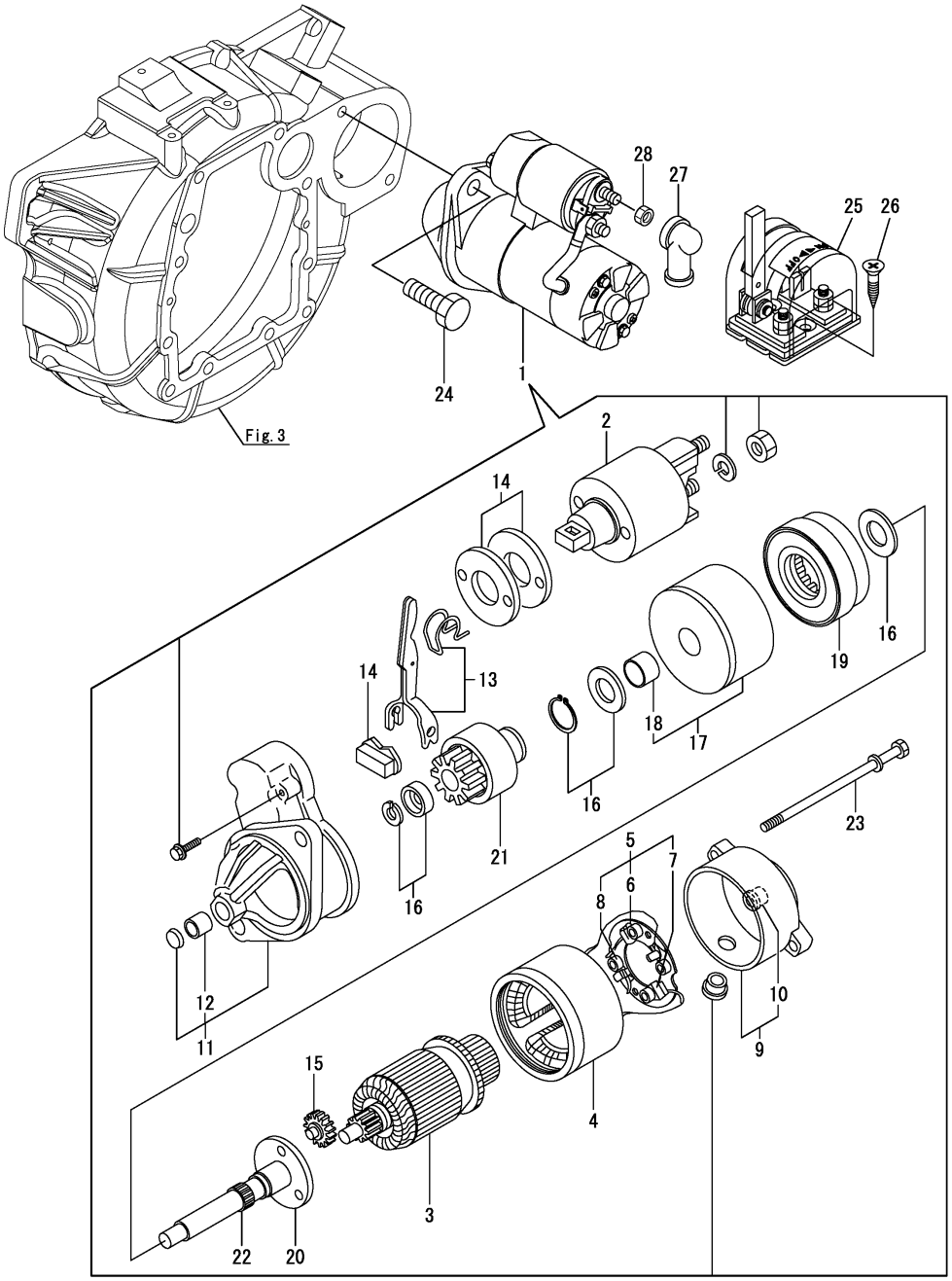

(A)=3JH4E (D)=
(B)= (E)=
(C)= (F)=

No.	Lev.	Parts No.	Description	Q'ty (A)	(B)	(C)	(D)	(E)	(F)	I	R
1	1	129608-77010	STARTER, S114-817A	1							
2	2	129698-77020	SWITCH ASSY	1							
3	2	129698-77101	ARMATURE ASSY	1							
4	2	129608-77110	YOKE ASSY	1							
5	2	129698-77120	HOLDER ASSY, BRUSH	1							
6	3	129698-77140	BRUSH SET	1							
7	3	129698-77130	BRUSH	2							
8	3	129698-77150	SPRING, BRUSH	4							
9	2	129698-77161	COVER ASSY	1							
10	3	129698-77170	BEARING	1							
11	2	129698-77260	CASE ASSY	1							
12	3	X2114535200	METAL, STARTER	1							
13	2	129698-77270	LEVER SET, SHIFT	1							
14	2	129698-77280	COVER KIT	1							
15	2	129698-77240	GEAR	3							
16	2	129698-77250	WASHER SET	1							
17	2	129698-77180	BRACKET	1							
18	3	129698-77190	BRACKET	1							
19	2	129698-77200	GEAR, INTERNAL	1							
20	2	129698-77210	BRACKET	1							
21	2	129698-77220	PINION ASSY	1							
22	2	129698-77230	SHAFT	1							
23	2	124195-77770	BOLT, THROUGH	2							
24	1	26116-120302	BOLT, M12X 30 PLATED	2							
25	1	123310-77640	SWITCH, BATTERY	1							
26	1	22724-800380	SCREW, 8.0X38	2							
27	1	124550-77030	COVER, TERMINAL	1							
27-1	1	129670-77030	COVER, TERMINAL	1							R
	(A=*2004.11)										
28	1	26756-080002	NUT, LOCK M8	1							W
	(A=*2004.11)										

N:Old $\xleftrightarrow[\text{No}]{\text{Yes}}$ New, Q:Old $\xleftrightarrow[\text{Yes}]{\text{No}}$ New, R:Old $\xleftrightarrow[\text{Yes}]{\text{Yes}}$ New, S:Old $\xleftrightarrow[\text{No}]{\text{No}}$ New, W:Add, Z:Discontinued, F:Interchangeable by set, K:Q'ty Change

Copyright (C) 2014 YANMAR CO., LTD. All RightsReserved.

Fig.36. GENERATOR(12V-60A)

(A)=3JH4E (D)=
(B)= (E)=
(C)= (F)=

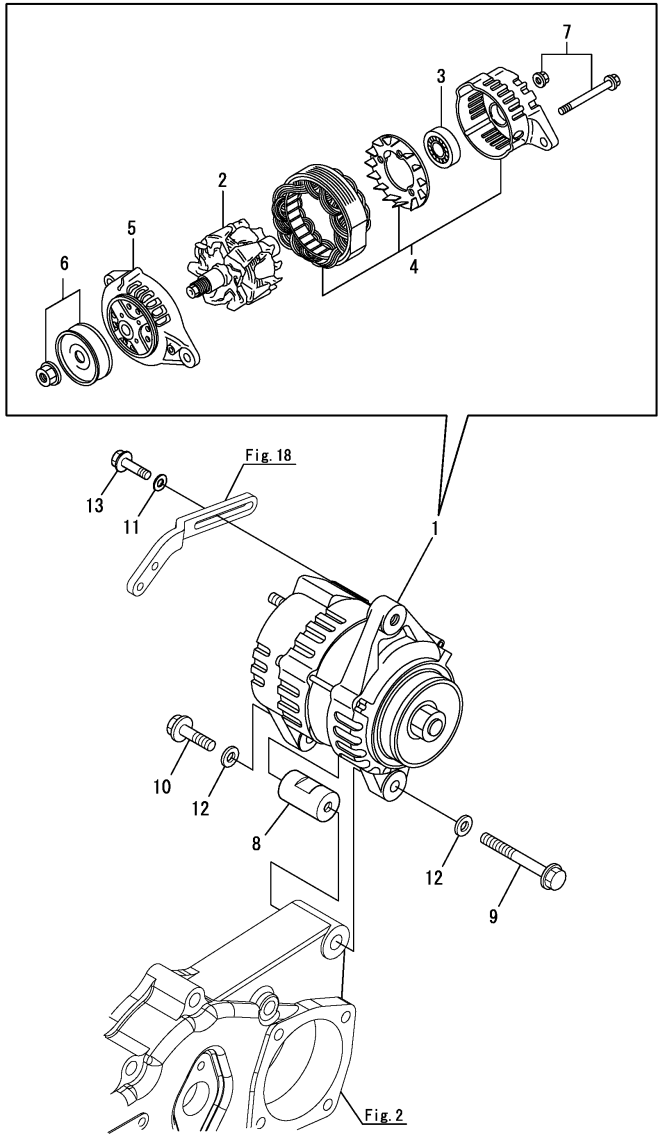

No.	Lev.	Parts No.	Description	Q'ty (A)	(B)	(C)	(D)	(E)	(F)	I	R
1	1	128271-77200	GENERATOR, 12V-60A	1							1
2	2	123900-77700	ROTOR ASSY	1							
3	2	129612-77710	BEARING, BALL	1							
3-1	2	129900-77810	BEARING, BALL	1						R	
	(A=*2005.02)										
4	2	128271-77720	BRACKET(STATOR+REGUL	1							
4-1	2	128271-77730	BRACKET(STATOR+REGUL	1						N	
	(A=*2005.02)										
5	2	123900-77730	BRACKET ASSY	1							
6	2	128271-77740	PULLEY	1							
7	2	128271-77750	SCREW KIT	1							
8	1	129670-77340	PIECE, DISTANCE	1							
8-1	1	129670-77350	PIECE	1						R	
	(A=*2004.04)										
9	1	129695-77370	BOLT, M10X75	1							
9-1	1	129695-77371	BOLT, M10X70	1						N	
	(A=*2006.02)										
9-2	1	129670-77370	BOLT 10X 70	1						R	
	(A=*2007.12)										
10	1	129695-77380	BOLT, M10X30	1							
10-1	1	129670-77380	BOLT 10X 30	1						R	
	(A=*2007.12)										
11	1	22137-080000	WASHER, 8	1							
12	1	22137-100000	WASHER, 10	2							
13	1	26106-080252	BOLT, M8X 25 PLATED	1							

Remarks
(1)12V-60A : Changed to optional parts from standard parts.

N:Old $\xleftrightarrow[\text{No}]{\text{Yes}}$ New, Q:Old $\xleftrightarrow[\text{Yes}]{\text{No}}$ New, R:Old $\xleftrightarrow[\text{Yes}]{\text{Yes}}$ New, S:Old $\xleftrightarrow[\text{No}]{\text{No}}$ New, W:Add, Z:Discontinued, F:Interchangeable by set, K:Q'ty Change

Copyright (C) 2014 YANMAR CO., LTD. All RightsReserved.

Fig.37. GENERATOR(12V-80A)

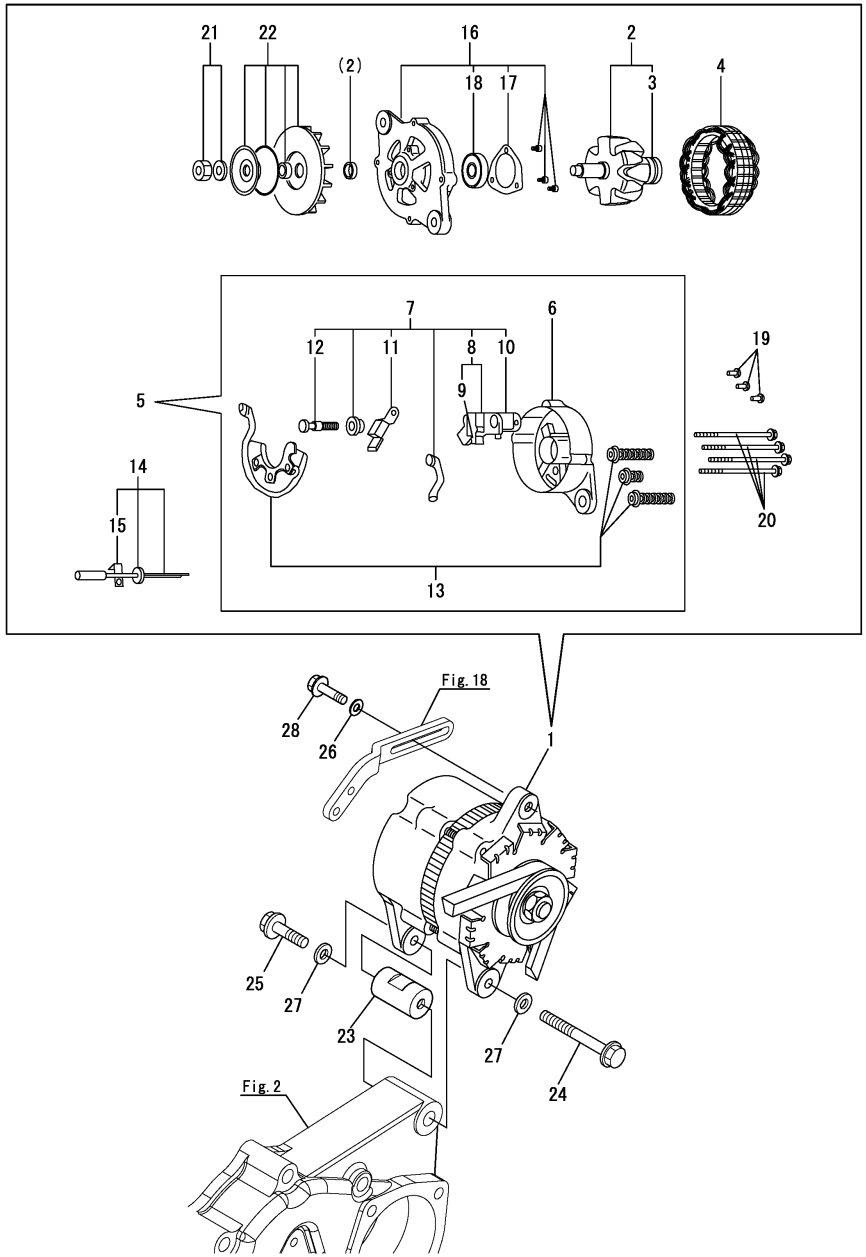

(A)=3JH4E (D)=
(B)= (E)=
(C)= (F)=

No.	Lev.	Parts No.	Description	Q'ty (A)	(B)	(C)	(D)	(E)	(F)	I	R
1	1	119573-77201	ALTERNATER(12V-80A	1							1
2	2	XL180G61000	ROTOR ASSY	1							
3	3	119129-77320	BEARING, BALL	1							
4	2	XL180120000	STATOR ASSY	1							
5	2	XL180G63006	COVER ASSY, REAR	1							
6	3	XL180G13012	COVER, REAR	1							
7	3	XL180G43150	BRUSH ASSY,REGULATOR	1							
8	4	XL155G1330	BRUSH ASSY	1							
9	5	XL225G1325	BRUSH SET	2							
10	4	124080-77390	REGULATOR ASSY	1							
11	4	XL225431800	CONDENSER ASSY	1							
12	4	124080-77520	BOLT M5	2							
13	3	XL1808320	DIODE ASY	1							
14	3	119129-77250	WIRE, LEAD	1							
15	4	119129-77260	CLAMP	1							
16	2	XL235340110	COVER ASSY, FRONT	1							
17	3	XL150M14041	RETAINER	1							
18	3	X6303BM0000	BEARING, BALL	1							
19	2	119129-77930	SCREW KIT	1							
20	2	119129-77890	BOLT, THROUGH	4							
21	2	119129-77900	NUT ASSY, PULLEY	1							
22	2	XL180G85001	PULLEY ASSY	1							
23	1	129670-77340	PIECE, DISTANCE	1							
23-1	1	129670-77350	PIECE	1						R	
	(A=*2004.04)										
24	1	129695-77370	BOLT, M10X75	1							
24-1	1	129695-77371	BOLT, M10X70	1						N	
	(A=*2006.02)										
24-2	1	129670-77370	BOLT 10X 70	1						R	
	(A=*2007.12)										
25	1	129695-77380	BOLT, M10X30	1							
25-1	1	129670-77380	BOLT 10X 30	1						R	
	(A=*2007.12)										
26	1	22137-080000	WASHER, 8	1							
27	1	22137-100000	WASHER, 10	2							
28	1	26106-080252	BOLT, M8X 25 PLATED	1							

Remarks
(1)12V-80A : Changed to standard parts from optional parts.

N:Old $\xleftrightarrow[\text{No}]{\text{Yes}}$ New, Q:Old $\xleftrightarrow[\text{Yes}]{\text{No}}$ New, R:Old $\xleftrightarrow[\text{Yes}]{\text{Yes}}$ New, S:Old $\xleftrightarrow[\text{No}]{\text{No}}$ New, W:Add, Z:Discontinued, F:Interchangeable by set, K:Q'ty Change

Copyright (C) 2014 YANMAR CO., LTD. All RightsReserved.

Fig.38. V-BELT COVER & GENERATOR ATTACHIMENT

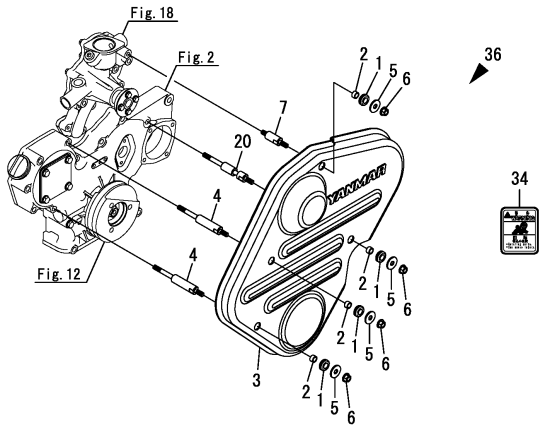

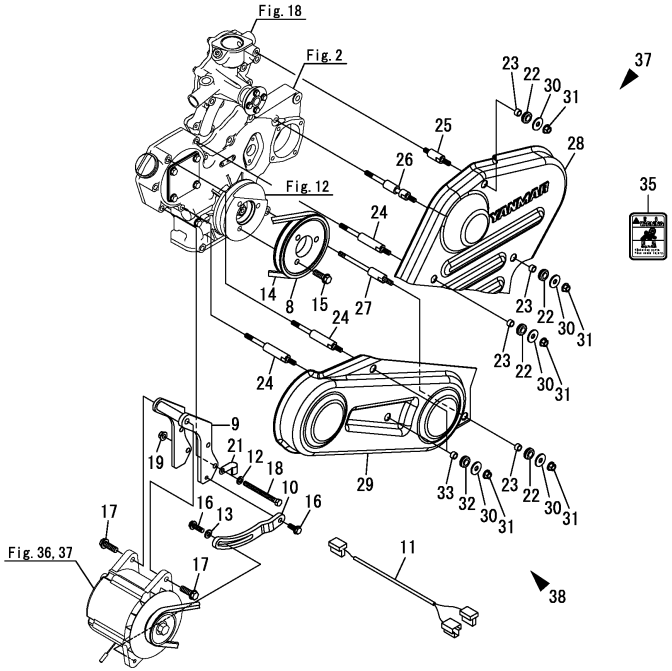

(A)=3JH4E (D)=
(B)= (E)=
(C)= (F)=

No.	Lev.	Parts No.	Description	Q'ty (A)	(B)	(C)	(D)	(E)	(F)	I	R
1	1	105100-55501	ABSORBER	4							
1-1	1	128990-77610	GROMMET	4						R	
	(A=*2005.04)										
2	1	105100-55540	COLLAR	4							
2-1	1	128990-77430	COLLAR	4						R	
	(A=*2004.03)										
3	1	129271-77400	COVER, BELT	1							
3-1	1	129271-77401	COVER, BELT	1						N	
	(A=*2006.08)										
4	1	129271-77410	BOLT	3							
4-1	1	129271-77410	BOLT	2						K	
	(A=E00395)										
4-2	1	129271-77411	BOLT,BELT COVER	2						S	
	(A=*2012.11)										
5	1	22157-080000	WASHER, 8	4							
6	1	26306-080002	NUT, M8	4							
7	1	129271-77420	BOLT	1							
7-1	1	129271-77421	BOLT,BELT COVER	1						S	
	(A=*2012.11)										
8	1	129271-21350	V-PULLEY	1							1
9	1	129271-77310	BRACKET, AITERNATOR	1							1
9-1	1	129271-77311	BRACKET,ALTERNATOR	1						N	1
	(A=*2006.07)										
10	1	129271-77330	ADJUSTER	1							1
11	1	129271-77930	HARNESS, WIRE	1							1
11-1	1	129271-77931	HARNESS,ALTERNATOR	1						R	1
	(A=*2005.05)										
12	1	22137-080000	WASHER, 8	2							1
13	1	22137-080000	WASHER, 8	1							1
14	1	25132-003800	V-BELT, A38	1							1
15	1	26106-080252	BOLT, M8X 25 PLATED	4							1
15-1	1	26106-100302	BOLT, M10X 30 PLATED	3						N	1
	(A=FROM 1ST)										
16	1	26106-080252	BOLT, M8X 25 PLATED	2							1
17	1	26106-100302	BOLT, M10X 30 PLATED	2							1
18	1	26116-080904	BOLT, M8X 90 PLATED	2							1
19	1	26306-080002	NUT, M8	2							1
20	1	129271-77430	BOLT	1						W	1
	(A=E00395)										
21	1	129150-03100	RETAINER, PIPE	1						W	1
	(A=FROM 1ST)										
22	1	105100-55501	ABSORBER	3						W	1
	(A=E00576)										
22-1	1	128990-77610	GROMMET	3						R	1
	(A=*2005.04)										
23	1	105100-55540	COLLAR	3						W	1
	(A=E00576)										
23-1	1	128990-77430	COLLAR	3						R	1
	(A=*2004.03)										
24	1	129271-77410	BOLT	3						W	1
	(A=E00576)										

N:Old $\overset{\text{Yes}}{\underset{\text{No}}{\leftrightarrows}}$ New, Q:Old $\overset{\text{No}}{\underset{\text{Yes}}{\leftrightarrows}}$ New, R:Old $\overset{\text{Yes}}{\underset{\text{Yes}}{\leftrightarrows}}$ New, S:Old $\overset{\text{No}}{\underset{\text{No}}{\leftrightarrows}}$ New, W:Add, Z:Discontinued, F:Interchangeable by set, K:Q'ty Change

Remarks
(1)Optional parts.
(2)Include No.1-1, 2-1, 3-1, 34.
(3)Include No.22-1, 23-1, 28-1, 35.
(4)Include No.29, 32-1, 33-1.

++ CONTINUE ++

Copyright (C) 2014 YANMAR CO., LTD. All RightsReserved.

Fig.38. V-BELT COVER & GENERATOR ATTACHIMENT

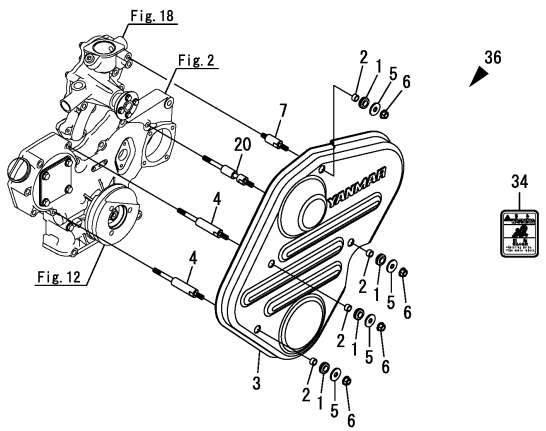

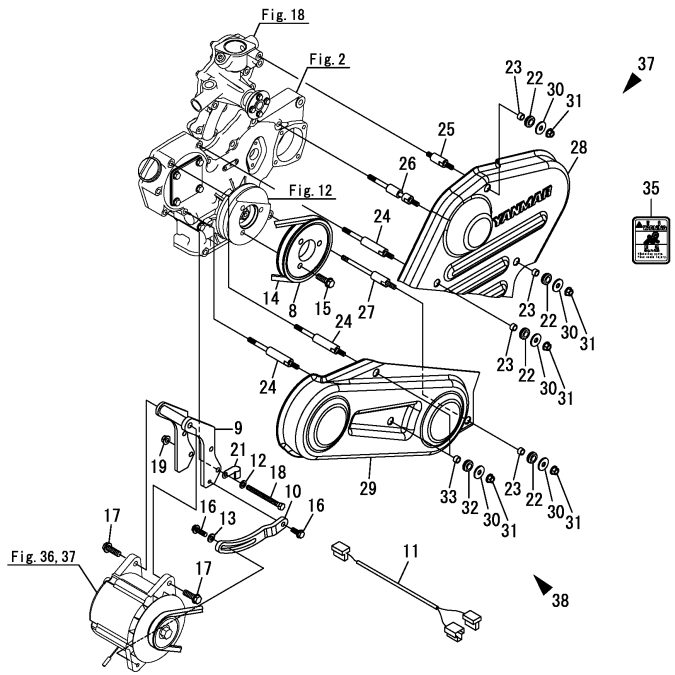

(A)=3JH4E (D)=
(B)= (E)=
(C)= (F)=

No.	Lev.	Parts No.	Description	Q'ty (A)	(B)	(C)	(D)	(E)	(F)	I	R
24-1	1	129271-77411	BOLT,BELT COVER	3						S	1
	(A=*2012.11)										
25	1	129271-77420	BOLT	1						W	1
	(A=E00576)										
25-1	1	129271-77421	BOLT,BELT COVER	1						S	1
	(A=*2012.11)										
26	1	129271-77430	BOLT	1						W	1
	(A=E00576)										
27	1	129271-77440	BOLT	1						W	1
	(A=E00576)										
28	1	129271-77500	COVER, BELT	1						W	1
	(A=E00576)										
28-1	1	129271-77501	COVER, BELT	1						N	1
	(A=*2006.08)										
29	1	129271-77510	COVER, BELT	1							1
30	1	22157-080000	WASHER, 8	6						W	1
	(A=E00576)										
31	1	26306-080002	NUT, M8	6						W	1
	(A=E00576)										
32	1	105100-55501	ABSORBER	3						W	1
	(A=E00576)										
32-1	1	128990-77610	GROMMET	3						R	1
	(A=*2005.04)										
33	1	105100-55540	COLLAR	3						W	1
	(A=E00576)										
33-1	1	128990-77430	COLLAR	3						R	1
	(A=*2004.03)										
34	1	128377-07350	LABEL, CAUTION	1						W	
	(A=*2004.03)										
35	1	128377-07350	LABEL, CAUTION	1						W	1
	(A=*2008.11)										
36	1	129271-77390	COVER,BELT CMP	1						W	2
	(A=*2008.11)										
37	1	129271-77480	COVER,BELT CMP	1						W	3
	(A=*2008.11)										
38	1	129271-77490	COVER,BELT CMP	1						W	4
	(A=*2008.11)										

Remarks
(1)Optional parts.
(2)Include No.1-1, 2-1, 3-1, 34.
(3)Include No.22-1, 23-1, 28-1, 35.
(4)Include No.29, 32-1, 33-1.

N:Old $\xleftarrow[\text{No}]{\text{Yes}}$ New, Q:Old $\xleftarrow[\text{Yes}]{\text{No}}$ New, R:Old $\xleftarrow[\text{Yes}]{\text{Yes}}$ New, S:Old $\xleftarrow[\text{No}]{\text{No}}$ New, W:Add, Z:Discontinued, F:Interchangeable by set, K:Q'ty Change

Copyright (C) 2014 YANMAR CO., LTD. All RightsReserved.

Fig.39. WIRE HARNESS & SENSOR

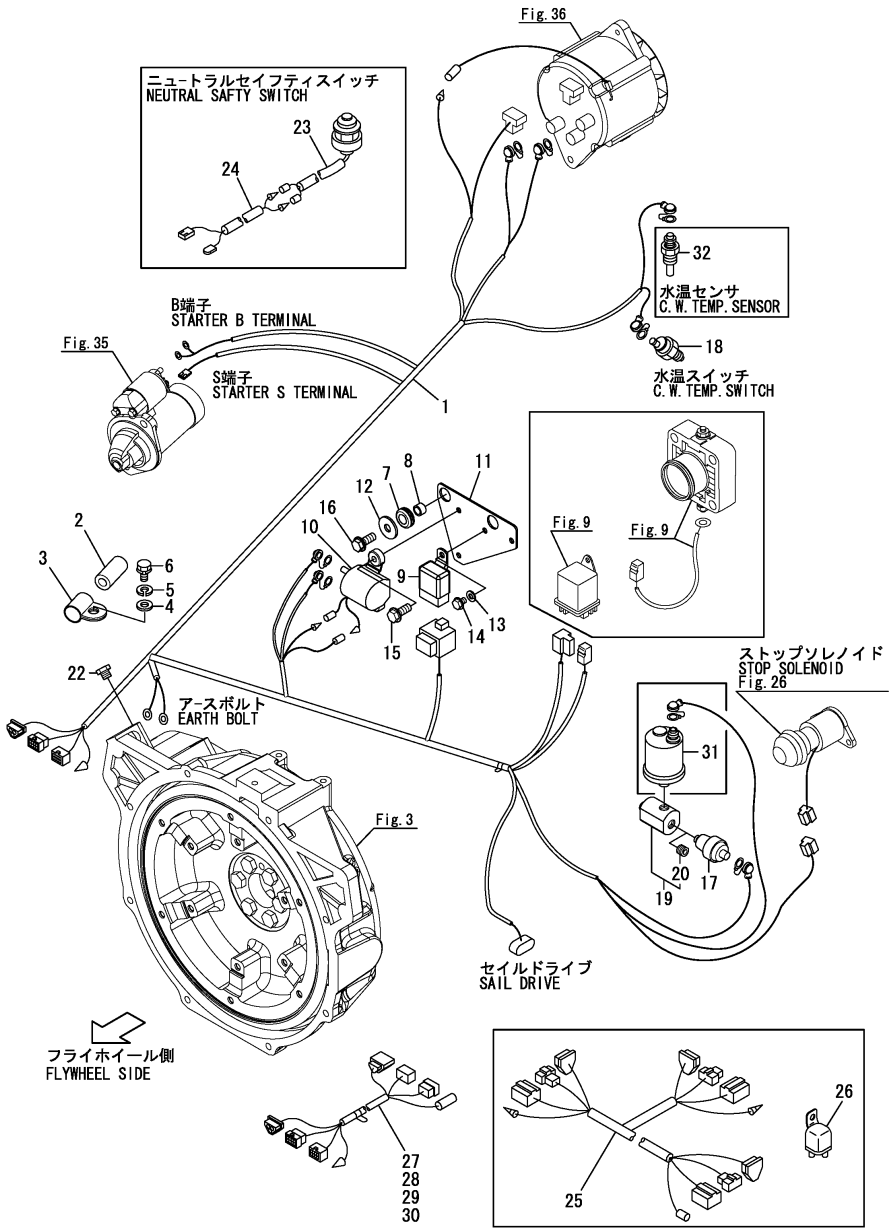

(A)=3JH4E (D)=
(B)= (E)=
(C)= (F)=

No.	Lev.	Parts No.	Description	Q'ty (A)	(B)	(C)	(D)	(E)	(F)	I	R
1	1	129271-77910	HARNESS, WIRE	1							
1-1	1	129271-77911	HARNESS, WIRE	1						R	
	(A=*2005.16)										
2	1	124770-77940	PROTECTOR	1							
2-1	1	129670-77940	PROTECTOR	1						R	
	(A=*2007.12)										
3	1	124070-77950	CLAMP	1							
4	1	22137-080000	WASHER, 8	1							
5	1	22217-080000	WASHER, SPRING 8	1							
6	1	26106-080162	BOLT, M8X 16 PLATED	1							
7	1	105100-55501	ABSORBER	2							
7-1	1	128990-77610	GROMMET	2						R	
	(A=*2005.04)										
8	1	105100-55540	COLLAR	2							
8-1	1	128990-77430	COLLAR	2						R	
	(A=*2004.03)										
9	1	119247-77100	RELAY, SAFETY	1							
10	1	120270-77511	RELAY, MAGNETIC	1							
10-1	1	128990-77550	RELAY, MAGNETIC	1						N	
	(A=*2008.04)										
11	1	129271-77960	BRACKET, RELAY	1							
12	1	22157-080000	WASHER, 8	2							
13	1	22217-060000	WASHER, SPRING 6	1							
14	1	26106-060082	BOLT, M6X 8 PLATED	1							
15	1	26106-060122	BOLT, M6X 12 PLATED	2							
16	1	26106-080202	BOLT, M8X 20 PLATED	2							
17	1	124060-39452	SWITCH, 0.2KG	1							
17-1	1	121252-39450	SWITCH, 0.5KG	1						N	
	(A=E06740)										
18	1	120130-91370	SWITCH, 100	1							
19	1	129670-39600	DAMPER ASSY, R1/8	1							
20	2	23875-010000	PLUG, R01	1							
22	1	23887-180002	PLUG, 18	1							
23	1	120270-77102	SWITCH, SAFETY	1							1
24	1	129570-77960	HARNESS, WIRE	1							1
25	1	129574-77980	HARNESS, WIRE	1							2
26	1	119773-91850	RELAY	1							2
27	1	129574-77710	HARNESS, WIRE 4M	1							1
28	1	129574-77720	HARNESS, WIRE 6M	1							1
29	1	128391-77720	HARNESS, WIRE	1							1
30	1	129574-77740	HARNESS, WIRE 10M	1							1
31	1	119773-91650	SENSOR	1							1
32	1	119773-91700	SENDER	1							1

Remarks
(1)Optional parts.
(2)2-Place expression (Optional parts).

N:Old $\frac{\text{Yes}}{\text{No}}$ New, Q:Old $\frac{\text{No}}{\text{Yes}}$ New, R:Old $\frac{\text{Yes}}{\text{Yes}}$ New, S:Old $\frac{\text{No}}{\text{No}}$ New, W:Add, Z:Discontinued, F:Interchangeable by set, K:Q'ty Change

Copyright (C) 2014 YANMAR CO., LTD. All RightsReserved.

Fig.40. INSTRUMENT PANEL(B-TYPE)(OPTIONAL)

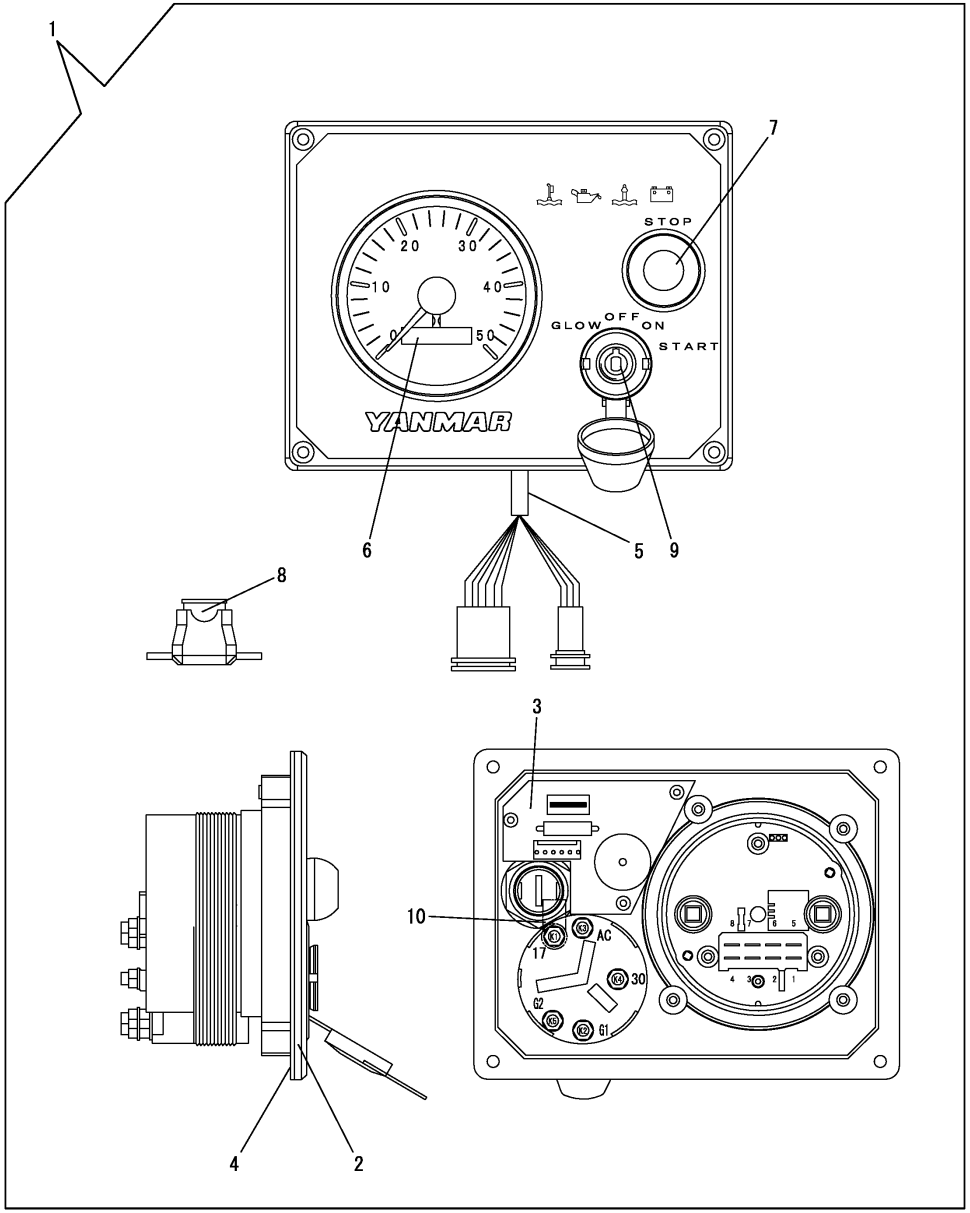

(A)=3JH4E (D)=
(B)= (E)=
(C)= (F)=

No.	Lev.	Parts No.	Description	Q'ty (A)	(B)	(C)	(D)	(E)	(F)	I	R
1	1	129271-91110	PANEL, INSTRUMENT B	1							
1-1	1	129271-91111	PANEL, INSTRUMENT B	1						N	
	(A=*2005.12)										
1-2	1	129271-91112	PANEL	1						N	
	(A=*2008.09)										
1-3	1	129271-91113	PANEL, INSTRUMENT B	1						N	
	(A=*2009.10)										
2	2	129271-91120	PANEL WITH COVERFOIL	1							
3	2	129271-91130	CIRCUIT	1							
3-1	2	129271-91131	CIRCUIT WITH LED&BZR	1						N	
	(A=*2008.09)										
3-2	2	129271-91132	CIRCUIT WITH LED&BZR	1						N	
	(A=*2009.10)										
4	2	129271-91140	SEAL	1							
5	2	129271-91150	HARNESS, WIRE	1							
6	2	129271-91210	TACHOMETER	1							
6-1	2	129271-91211	TACHOMETER (AN)10.29	1						N	
	(A=*2009.10)										
7	2	129271-91220	SWITCH, STOP	1							
8	2	129271-91230	FUSE	1							
9	2	127412-91250	SWITCH, KEY	1							
10	2	129271-91260	CAP, RUBBER M5	1						W	
	(A=*2005.12)										

N:Old $\xleftrightarrow[\text{No}]{\text{Yes}}$ New, Q:Old $\xleftrightarrow[\text{Yes}]{\text{No}}$ New, R:Old $\xleftrightarrow[\text{Yes}]{\text{Yes}}$ New, S:Old $\xleftrightarrow[\text{No}]{\text{No}}$ New, W:Add, Z:Discontinued, F:Interchangeable by set, K:Q'ty Change

Copyright (C) 2014 YANMAR CO., LTD. All RightsReserved.

Fig.41. INSTRUMENT PANEL(C-TYPE)(OPTIONAL)

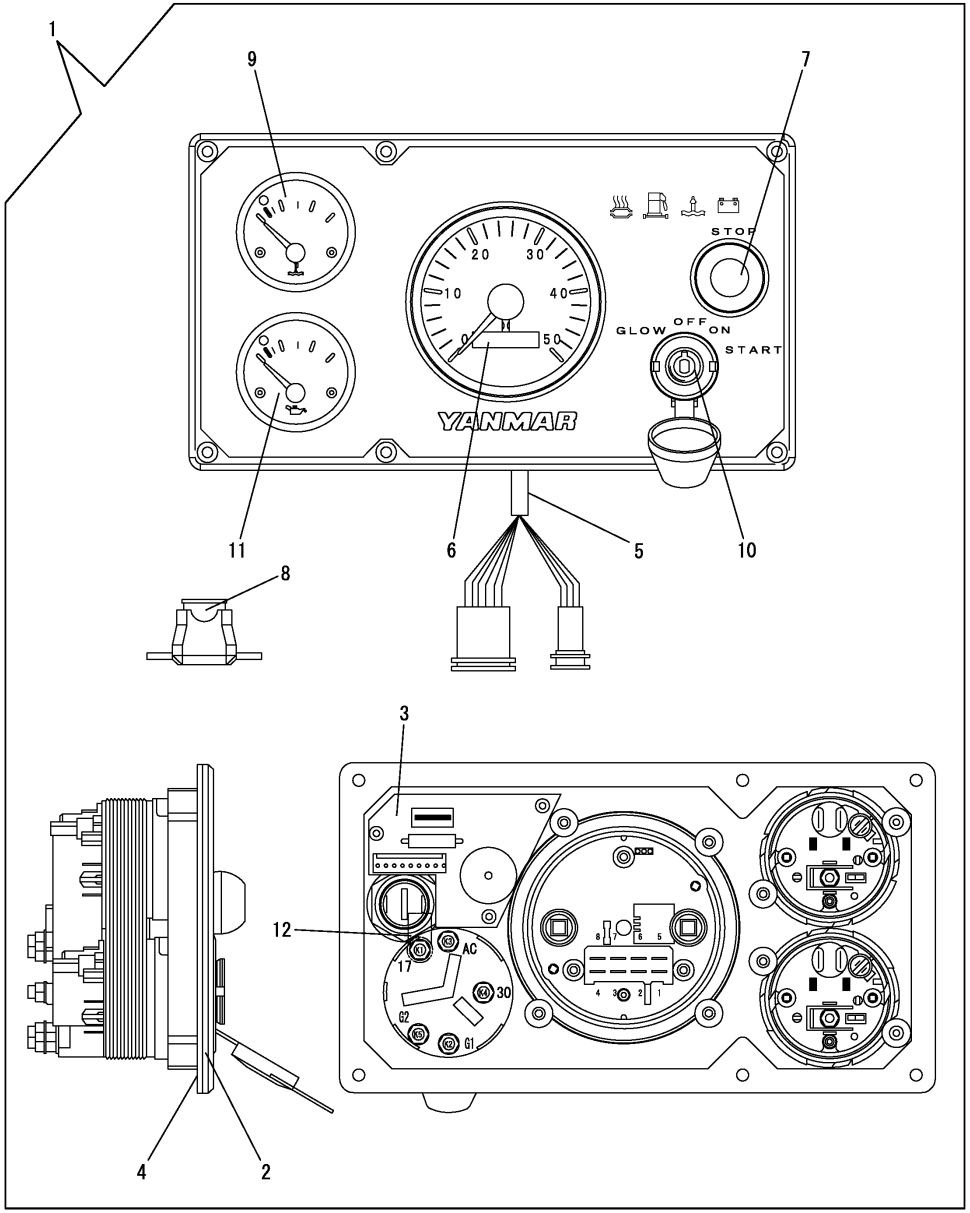

(A)=3JH4E (D)=
(B)= (E)=
(C)= (F)=

No.	Lev.	Parts No.	Description	Q'ty (A)	(B)	(C)	(D)	(E)	(F)	I	R
1	1	129271-91160	PANEL, INSTRUMENT C	1							
1-1	1	129271-91161	PANEL, INSTRUMENT C	1						N	
	(A=*2005.12)										
1-2	1	129271-91162	C-PANEL(VDO	1						N	
	(A=*2008.09)										
1-3	1	129271-91163	PANEL, INSTRUMENT C	1						N	
	(A=*2009.10)										
2	2	129271-91170	PANEL WITH COVERFOIL	1							
3	2	129271-91180	CIRCUIT	1							
3-1	2	129271-91181	CIRCUIT	1						N	
	(A=*2008.09)										
3-2	2	129271-91182	CIRCUIT WITH LED&BZR	1						N	
	(A=*2009.10)										
4	2	129271-91190	RUBBER, SEAL	1							
5	2	129271-91200	HARNESS, WIRE	1							
6	2	129271-91210	TACHOMETER	1							
6-1	2	129271-91211	TACHOMETER (AN)10.29	1						N	
	(A=*2009.10)										
7	2	129271-91220	SWITCH, STOP	1							
8	2	129271-91230	FUSE	1							
9	2	129271-91240	THERMOMETER, WATER	1							
10	2	127412-91250	SWITCH, KEY	1							
11	2	129271-91250	GAUGE	1							
12	2	129271-91260	CAP, RUBBER M5	1						W	
	(A=*2005.12)										

N:Old $\overset{\text{Yes}}{\underset{\text{No}}{\leftrightarrow}}$ New, Q:Old $\overset{\text{No}}{\underset{\text{Yes}}{\leftrightarrow}}$ New, R:Old $\overset{\text{Yes}}{\underset{\text{Yes}}{\leftrightarrow}}$ New, S:Old $\overset{\text{No}}{\underset{\text{No}}{\leftrightarrow}}$ New, W:Add, Z:Discontinued, F:Interchangeable by set, K:Q'ty Change

Copyright (C) 2014 YANMAR CO., LTD. All RightsReserved.

Fig.45. (41A)INSTRUMENT PANEL(B-TYPE:KEYLES)(OPTIONAL)

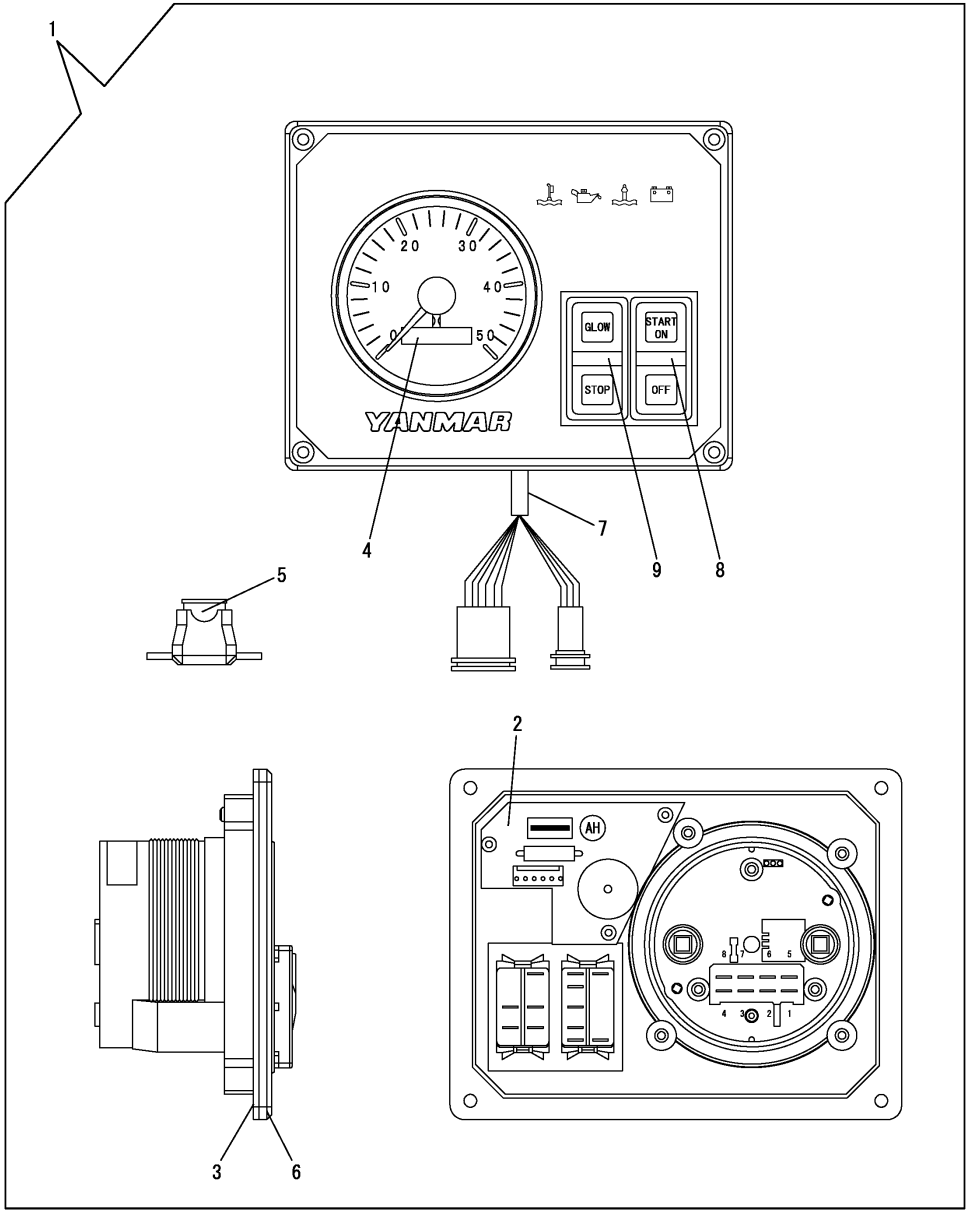

(A)=3JH4E (D)=
(B)= (E)=
(C)= (F)=

No.	Lev.	Parts No.	Description	Q'ty (A)	(B)	(C)	(D)	(E)	(F)	I	R
1	1	129271-91300	PANEL	1						W	
	(A=*2007.05)										
1-1	1	129271-91301	PANEL	1						N	
	(A=*2008.09)										
1-2	1	129271-91302	PANEL,B KEYLESS	1						N	
	(A=*2009.10)										
2	2	129271-91130	CIRCUIT	1							
2-1	2	129271-91131	CIRCUIT WITH LED&BZR	1						N	
	(A=*2008.09)										
2-2	2	129271-91132	CIRCUIT WITH LED&BZR	1						N	
	(A=*2009.10)										
3	2	129271-91140	SEAL	1							
4	2	129271-91210	TACHOMETER	1							
4-1	2	129271-91211	TACHOMETER (AN)10.29	1						N	
	(A=*2009.10)										
5	2	129271-91230	FUSE	1							
6	2	129271-91310	PANEL WITH COVERFOIL	1							
7	2	129271-91320	HARNESS,B KEYLESS	1							
8	2	129271-91330	SWITCH,OFF/START	1							
9	2	129271-91340	SWITCH,GLOW/STOP	1							

N:Old ◄Yes/No► New, Q:Old ◄No/Yes► New, R:Old ◄Yes/Yes► New, S:Old ◄No/No► New, W:Add, Z:Discontinued, F:Interchangeable by set, K:Q'ty Change

Copyright (C) 2014 YANMAR CO., LTD. All RightsReserved.

Fig.46. (41B)INSTRUMENT PANEL(C-TYPE:KEYLES)(OPTIONAL)

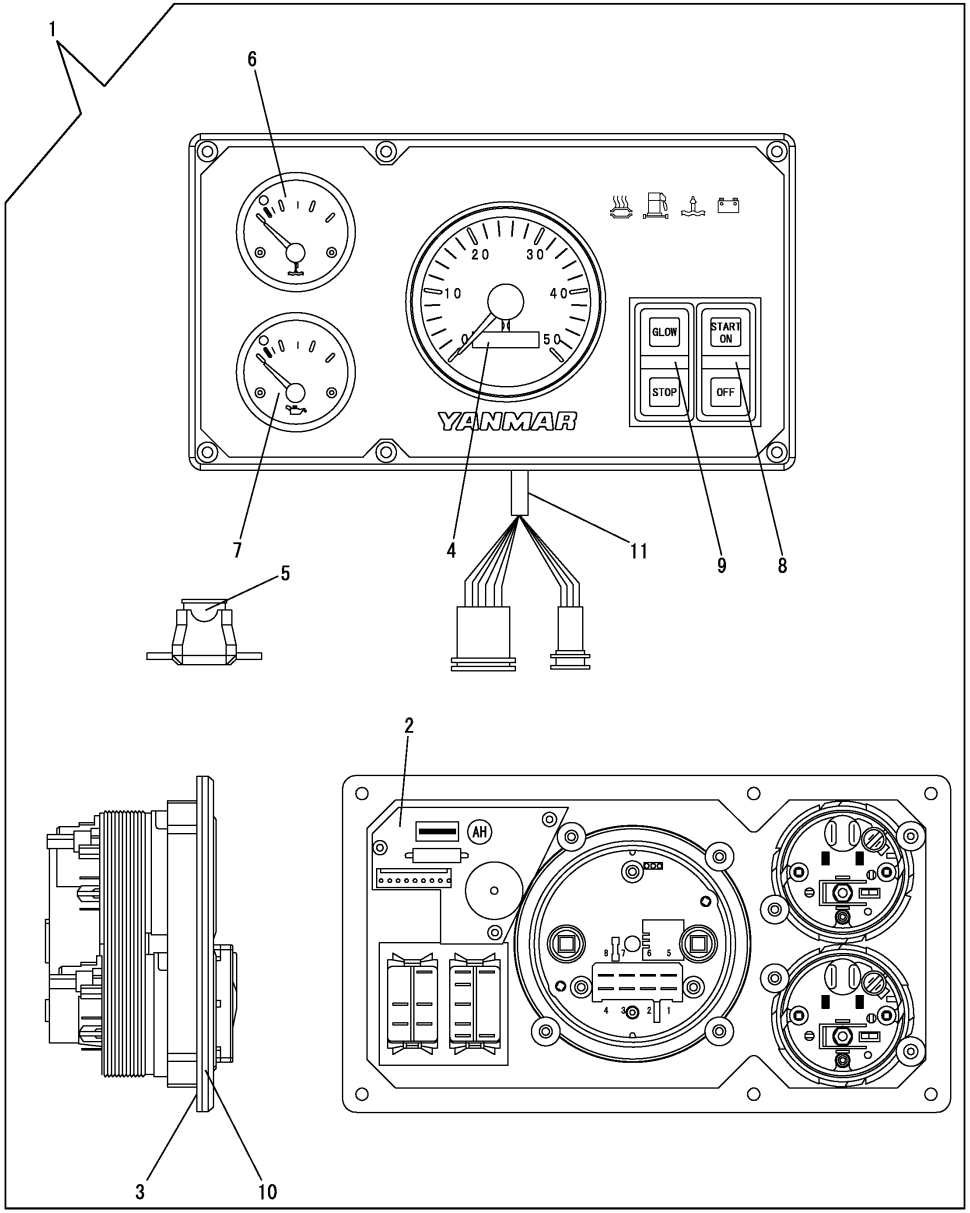

(A)=3JH4E (D)=
(B)= (E)=
(C)= (F)=

No.	Lev.	Parts No.	Description	Q'ty (A)	(B)	(C)	(D)	(E)	(F)	I	R
1	1	129271-91350	PANEL	1						W	
	(A=*2007.05)										
1-1	1	129271-91351	PANEL	1						N	
	(A=*2008.09)										
1-2	1	129271-91352	PANEL,C KEYLESS	1						N	
	(A=*2009.10)										
2	2	129271-91180	CIRCUIT	1							
2-1	2	129271-91181	CIRCUIT	1						N	
	(A=*2008.09)										
2-2	2	129271-91182	CIRCUIT WITH LED&BZR	1						N	
	(A=*2009.10)										
3	2	129271-91190	RUBBER, SEAL	1							
4	2	129271-91210	TACHOMETER	1							
4-1	2	129271-91211	TACHOMETER (AN)10.29	1						N	
	(A=*2009.10)										
5	2	129271-91230	FUSE	1							
6	2	129271-91240	THERMOMETER, WATER	1							
7	2	129271-91250	GAUGE	1							
8	2	129271-91330	SWITCH,OFF/START	1							
9	2	129271-91340	SWITCH,GLOW/STOP	1							
10	2	129271-91360	PANEL	1							
11	2	129271-91370	HARNESS, WIRE	1							

N:Old $\xleftrightarrow[\text{No}]{\text{Yes}}$ New, Q:Old $\xleftrightarrow[\text{Yes}]{\text{No}}$ New, R:Old $\xleftrightarrow[\text{Yes}]{\text{Yes}}$ New, S:Old $\xleftrightarrow[\text{No}]{\text{No}}$ New, W:Add, Z:Discontinued, F:Interchangeable by set, K:Q'ty Change

Copyright (C) 2014 YANMAR CO., LTD. All RightsReserved.

Fig.42. TOOLS

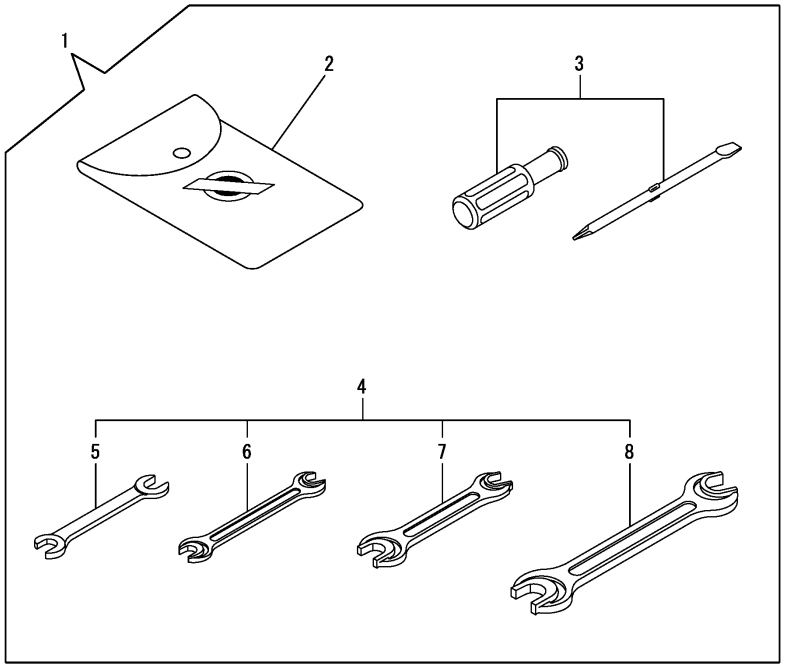

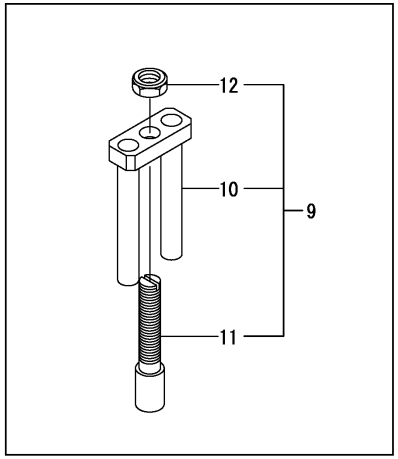

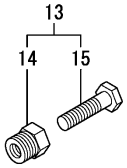

(A)=3JH4E (D)=
(B)= (E)=
(C)= (F)=

No.	Lev.	Parts No.	Description	Q'ty (A)	(B)	(C)	(D)	(E)	(F)	I	R
1	1	129270-92100	BOX, TOOL	1							
2	2	129270-92600	BAG, TOOL	1							
3	2	129270-92650	DRIVER	1							
4	2	129270-92690	WRENCH ASSY	1							
5	3	129270-92610	WRENCH, 10X13	1							
6	3	129270-92620	WRENCH, 12X14	1							
7	3	129270-92630	WRENCH, 17X19	1							
8	3	129270-92640	WRENCH, 22X24	1							
9	1	129470-92300	TOOL ASSY, NOZZLE	1							
10	2	129470-92310	TOOL,NOZZLE REMOVE A	1							
11	2	129470-92320	TOOL,NOZZLE REMOVE B	1							
12	2	26716-120002	NUT, M12	1							
13	1	129671-92110	PULLER ASSY	1							
14	2	129671-92120	PULLER	1							
15	2	129671-92130	BOLT, M10X40	1							

N:Old $\xleftrightarrow[\text{No}]{\text{Yes}}$ New, Q:Old $\xleftrightarrow[\text{Yes}]{\text{No}}$ New, R:Old $\xleftrightarrow[\text{Yes}]{\text{Yes}}$ New, S:Old $\xleftrightarrow[\text{No}]{\text{No}}$ New, W:Add, Z:Discontinued, F:Interchangeable by set, K:Q'ty Change

Copyright (C) 2014 YANMAR CO., LTD. All RightsReserved.

Fig.43. GASKET SET(OPTIONAL)

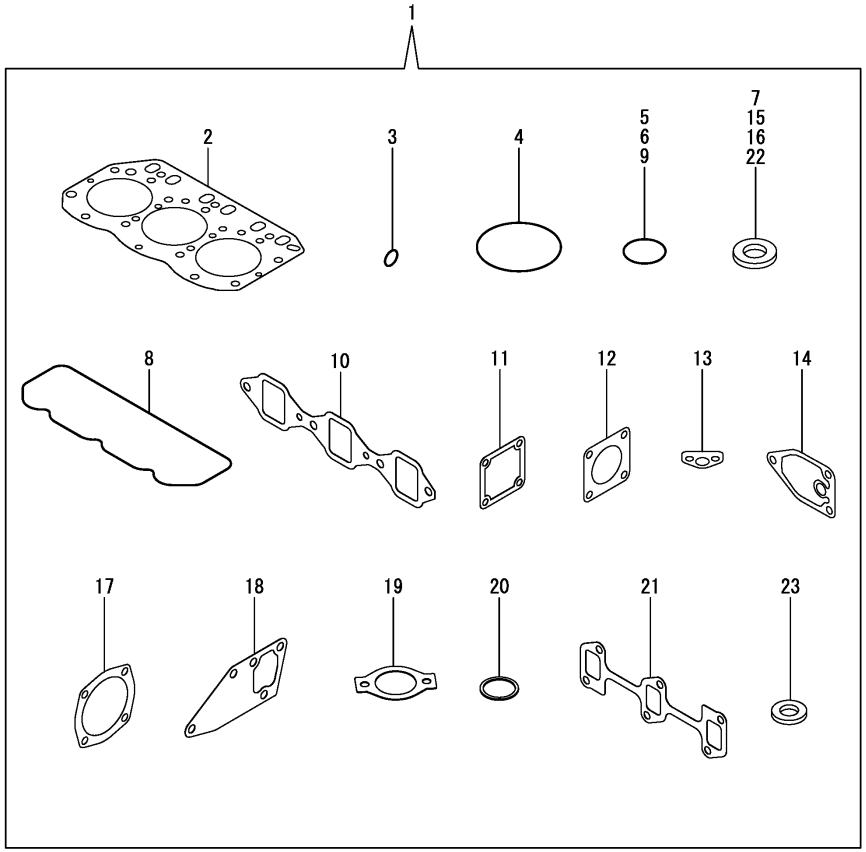

(A)=3JH4E (D)=
(B)= (E)=
(C)= (F)=

No.	Lev.	Parts No.	Description	Q'ty (A)	(B)	(C)	(D)	(E)	(F)	I	R
1	1	729271-92600	GASKET SET	1							
2	2	129001-01340	GASKET, HEAD	1							
3	2	119609-32040	O-RING, P16	4							
4	2	121850-51960	O-RING	1							
5	2	24311-000320	O-RING, 1AP32.0	2							
6	2	24341-000240	O-RING, 1AS24.0	1							
7	2	22190-140002	WASHER, SEAL 14	4							
8	2	129004-11310	GASKET, BONNET	1							
9	2	24311-000120	O-RING, 1AP12.0	3							
10	2	129150-12111	GASKET, MANIFOLD	1							
11	2	129150-77511	GASKET	1							
12	2	129472-18090	GASKET	1							
13	2	129150-35042	GASKET	1							
14	2	129150-35111	GASKET	1							
15	2	22190-080002	WASHER, SEAL 8	3							
16	2	22190-100002	WASHER, SEAL 10	2							
17	2	129150-01881	GASKET	2							
17-1	2	129C26-01890	GASKET, HO-P	2						R	
	(A=*2012.06)										
18	2	129486-42050	GASKET, WATER PUMP	1							
19	2	129795-49551	GASKET	1							
20	2	129470-49810	GASKET, THERMOSTAT	1							
20-1	2	129150-49811	GASKET, THERMOSTAT	1						R	
	(A=*2009.12)										
21	2	129150-13110	GASKET	1							
22	2	22190-120002	WASHER, SEAL 12	8							
23	2	23414-080000	GASKET, 8X1.0	1							

N:Old $\xleftarrow[\text{No}]{\text{Yes}}$ New, Q:Old $\xleftarrow[\text{Yes}]{\text{No}}$ New, R:Old $\xleftarrow[\text{Yes}]{\text{Yes}}$ New, S:Old $\xleftarrow[\text{No}]{\text{No}}$ New, W:Add, Z:Discontinued, F:Interchangeable by set, K:Q'ty Change

Copyright (C) 2014 YANMAR CO., LTD. All RightsReserved.

Fig.44. GENERATOR(ADDITION) & GENERATOR MOUNT PART(OPTIONAL)

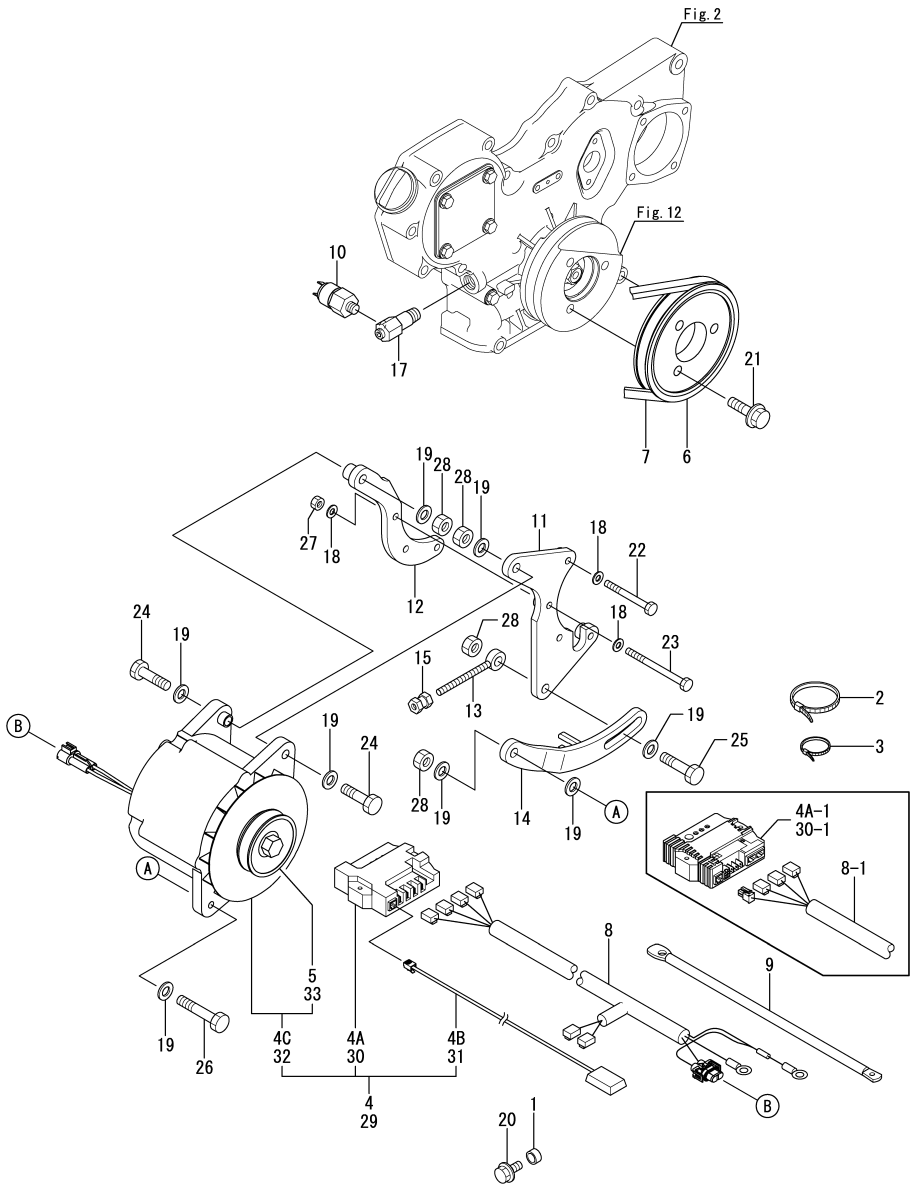

Remarks
(1)No.8-1 interchangeable by set.
(2)12V specification : No.4A-1 & 8-1 interchangeable by set.
24V specification : No.30-1 & 8-1 interchangeable by set.

(A)=3JH4E (D)=
(B)= (E)=
(C)= (F)=

No.	Lev.	Parts No.	Description	Q'ty (A)	(B)	(C)	(D)	(E)	(F)	I	R
1	1	129301-34830	SPACER	1							
2	1	194250-51660	BAND, NYLON 250	1							
2-1	1	29622-250001	BAND, RF250	1						R	
	(A=*2011.07.)										
3	1	121750-59890	BAND, NYLON	2							
4	1	129271-77220	ALTERNATOR, 12V-130A	1							
4-1	1	129271-77221	ALTERNATOR ASSY,12V	1						F	1
	(A=*2015.01.)										
4A	2	129271-77600	REGULATOR ASSY,12V	1						W	
	(A=*2011.07.)										
4A-1	2	129271-77720	REGULATOR ASSY,ALPHA	1						F	2
	(A=*2015.01.)										
4B	2	129271-77620	HARNESS,BATT SENSING	1						W	
	(A=*2011.07.)										
4C	2	129271-77580	ALTERNATOR,12V-130A	1						W	
	(A=*2011.07.)										
5	3	129271-77240	PULLEY,ALTERNATOR	1							
6	1	129271-77250	PULLEY,CRANK	1							
7	1	129271-77260	BELT,6PK1060	1							
8	1	129271-77270	WIREHARNESS,ALTERNAT	1							
8-1	1	129271-77271	HARNESS,WIRE ALTERNA	1						F	2
	(A=*2015.01.)										
9	1	129271-77280	GROUND CABLE	1							
10	1	129271-77290	SWITCH,OIL PRESSURE	1							
11	1	129271-77340	BRACKET,ALT FRONT	1							
12	1	129271-77350	BRACKET,ALT REAR	1							
13	1	129271-77360	ADJUSTER,ALTERNATOR	1							
14	1	129271-77370	BRACKET,ADJUSTER	1							
15	1	129271-77380	NUT,ADJUSTER	1							
17	1	129271-77570	DAMPER CMP(R 3/8	1							
18	1	22137-080000	WASHER, 8	7							
19	1	22137-120000	WASHER, 12	8							
20	1	26106-080222	BOLT, M8X 22 PLATED	1							
21	1	26106-100352	BOLT, M10X 35 PLATED	3							
22	1	26116-080752	BOLT, M8X 75 PLATED	1							
23	1	26116-081004	BOLT, M8X100 PLATED	3							
24	1	26116-120452	BOLT, M12X 45 PLATED	2							
25	1	26116-120502	BOLT, M12X 50 PLATED	1							
26	1	26116-120652	BOLT, M12X 65 PLATED	1							
27	1	26716-080002	NUT, M8	3							
28	1	26716-120002	NUT, M12	4							
29	1	129271-77230	ALTERNATOR, 24V-75A	1							
29-1	1	129271-77231	ALTERNATOR ASSY,24V	1						F	1
	(A=*2015.01.)										
30	2	129271-77610	REGULATOR ASSY,24V	1						W	
	(A=*2011.07.)										
30-1	2	129271-77720	REGULATOR ASSY,ALPHA	1						F	2
	(A=*2015.01.)										
31	2	129271-77620	HARNESS,BATT SENSING	1						W	
	(A=*2011.07.)										
32	2	129271-77590	ALTERNATOR,24V-75A	1						W	

N:Old $\xleftarrow[\text{No}]{\text{Yes}}$ New, Q:Old $\xleftarrow[\text{Yes}]{\text{No}}$ New, R:Old $\xleftarrow[\text{Yes}]{\text{Yes}}$ New, S:Old $\xleftarrow[\text{No}]{\text{No}}$ New, W:Add, Z:Discontinued, F:Interchangeable by set, K:Q'ty Change

++ CONTINUE ++

Copyright (C) 2014 YANMAR CO., LTD. All RightsReserved.

Fig.44. GENERATOR(ADDITION) & GENERATOR MOUNT PART(OPTIONAL)

(A)=3JH4E
(B)=
(C)=
(D)=
(E)=
(F)=

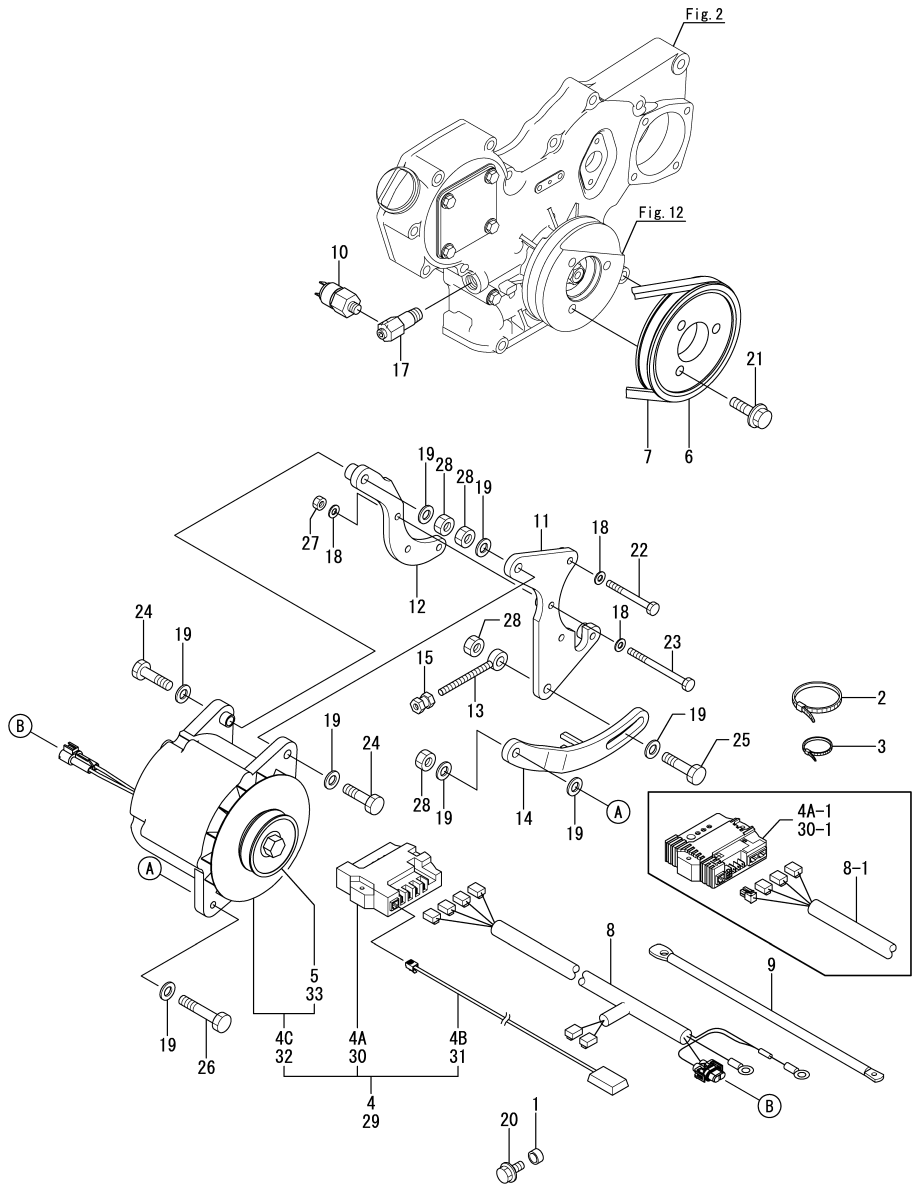

No.	Lev.	Parts No.	Description	Q'ty (A)	(B)	(C)	(D)	(E)	(F)	I	R
	(A=*2011.07.)										
33	3	129271-77240	PULLEY,ALTERNATOR	1							

Remarks
(1)No.8-1 interchangeable by set.
(2)12V specification : No.4A-1 & 8-1 interchangeable by set.
24V specification : No.30-1 & 8-1 interchangeable by set.

N:Old ←Yes/No→ New, Q:Old ←No/Yes→ New, R:Old ←Yes/Yes→ New, S:Old ←No/No→ New, W:Add, Z:Discontinued, F:Interchangeable by set, K:Q'ty Change

Copyright (C) 2014 YANMAR CO., LTD. All RightsReserved.

Fig.49. SPARE PARTS KIT(OPTIONAL)

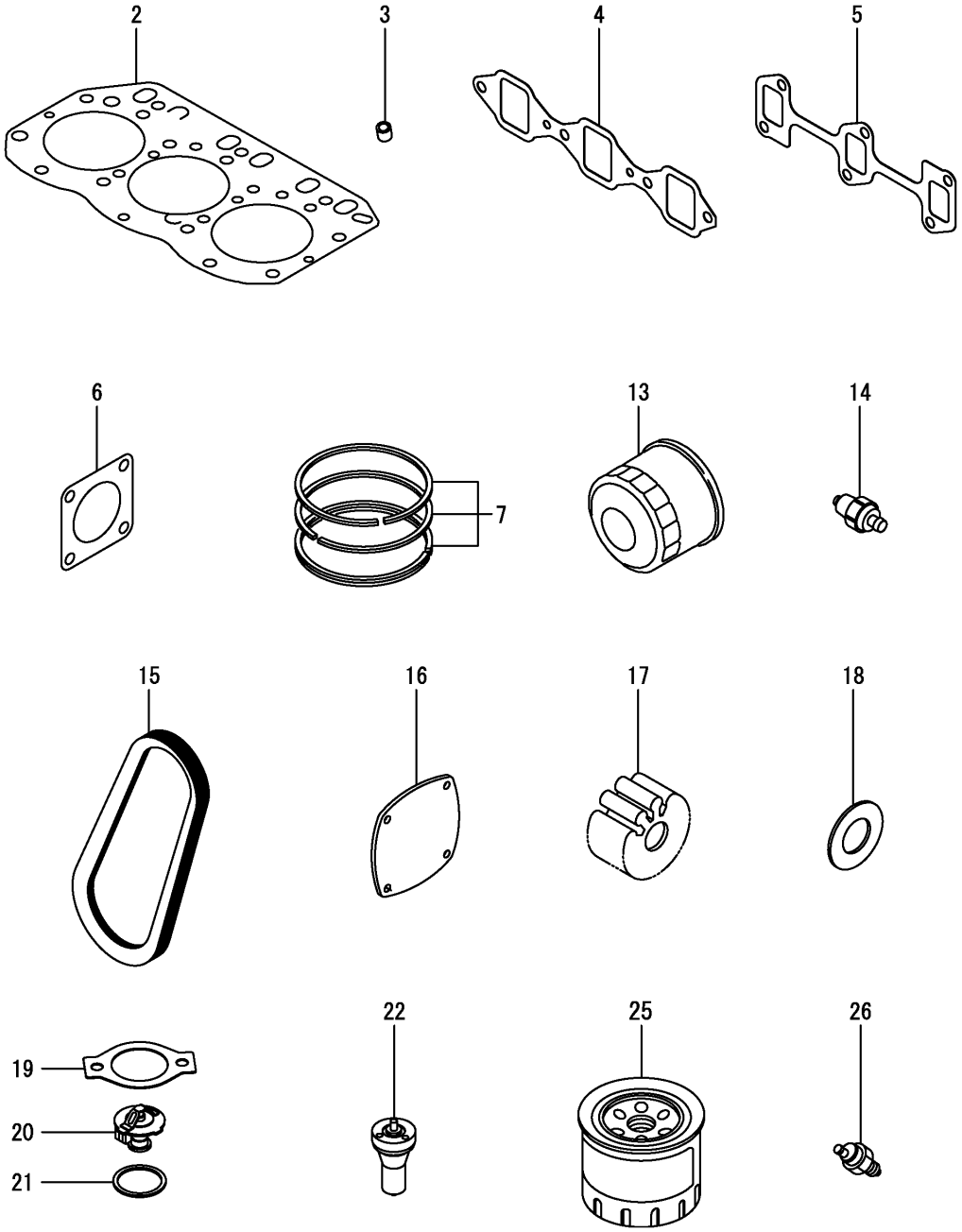

(A)=3JH4E (D)=
(B)= (E)=
(C)= (F)=

No.	Lev.	Parts No.	Description	Q'ty (A)	(B)	(C)	(D)	(E)	(F)	I	R
2	1	129001-01340	GASKET, HEAD	1							
3	1	119802-11870	PROTECTOR, NOZZLE	3							
4	1	129150-12111	GASKET, MANIFOLD	1							
5	1	129150-13110	GASKET, EXH.MANIFOLD	1							
6	1	129472-18090	GASKET	1							
7	1	129005-22500	RING SET, PISTON	3							
13	1	119305-35170	FILTER ASSY, D68XL65	1							
14	1	121252-39450	SWITCH, HYDRAULIC	1							
15	1	171087-42280	V-BELT, A44	1							
16	1	129670-42520	COVER	1							
17	1	129670-42531	IMPELLER	1							
18	1	129670-42540	PLATE	1							
19	1	129795-49551	GASKET	1							
20	1	129470-49801	THERMOSTAT, 76.5	1							
21	1	129150-49811	GASKET, THERMOSTAT	1							
22	1	129602-53001	NOZZLE ASSY, F.I.	3							
25	1	129470-55810	FILTER, FUEL	1							
26	1	120130-91370	SWITCH, 100	1							

N:Old $\xleftarrow[\text{No}]{\text{Yes}}$ New, Q:Old $\xleftarrow[\text{Yes}]{\text{No}}$ New, R:Old $\xleftarrow[\text{Yes}]{\text{Yes}}$ New, S:Old $\xleftarrow[\text{No}]{\text{No}}$ New, W:Add, Z:Discontinued, F:Interchangeable by set, K:Q'ty Change

Copyright (C) 2014 YANMAR CO., LTD. All RightsReserved.

Parts No. Index

Parts No.	Fig. No.	Ref. No.
101304-59020	30	8
		16
104214-83980	34	11
105100-55501	38	1
		22
		32
	39	7
105100-55540	9	12
	38	2
		23
		33
	39	8
105430-55041	31	8
105583-85900	34	8
114250-53080	28	5
114250-53120	28	10
114250-53130	28	11
114250-53140	28	12
114250-53210	28	13
114250-53400	28	14
119129-77250	37	14
119129-77260	37	15
119129-77320	37	3
119129-77890	37	20
119129-77900	37	21
119129-77930	37	19
119173-55700	30	4
119247-77100	39	9
119285-66610	26	92
119305-35170	14	13
	49	13
119573-77201	37	1
119600-66840	26	64
119609-32040	2	17
	43	3
119620-01750	3	11
119620-49290	14	25
	19	12
119625-11880	7	32
119660-61901	26	61
119717-51420	25	65 -1
119717-51500	25	44 -1
119717-51860	25	23 -1
119773-42570	16	9
	17	9
119773-91650	39	31
119773-91700	39	32
119773-91850	39	26
119800-61650	26	82 -1
119802-01560	2	13

Parts No.	Fig. No.	Ref. No.
119802-01561	2	13 -1
119802-03110	8	4
119802-03120	8	5
119802-03121	8	5 -1
119802-03130	8	6
119802-03140	8	7
119802-03141	8	7 -1
119802-11260	7	6
119802-11270	7	7
119802-11280	7	8
119802-11870	7	31
	49	3
119802-21201	12	4
119802-21202	12	4 -1
119802-25051	11	10
119802-25100	11	11
119802-25101	11	11 -1
119802-32070	2	8
119802-32100	2	7
119802-32130	2	20
119802-35110	14	10
119803-53400	28	14 -1
119813-59950	30	24 -1
119865-21600	12	10
119908-61501	26	33
119940-59130	14	21
120130-11860	7	19
120130-91370	39	18
	49	26
120270-54410	7	34
120270-77102	39	23
120270-77511	39	10
120322-33050	19	9
120323-61470	26	81
121023-01550	2	28
121023-01551	2	28 -1
121111-21501	12	7
121252-39450	39	17 -1
	49	14
121400-11340	7	28
121450-01560	16	24
	17	28
121550-23200	13	13
121750-59890	30	12
	44	3
121850-21680	12	13
121850-51960	2	21
	43	4
122710-51050	25	6
122710-51090	25	9

Parts No.	Fig. No.	Ref. No.
123310-77640	35	25
123325-49421	10	7
	16	18
123682-07852	6	4
123900-77700	36	2
123900-77730	36	5
124060-01050	1	5
124060-39452	39	17
124070-59060	31	1
124070-59130	31	2
124070-77950	39	3
124080-77390	37	10
124080-77520	37	12
124160-01751	2	14
	8	16
124160-01910	1	7
		8
124160-11360	8	13
124160-39140	15	1
124195-77770	35	23
124240-01871	2	15
	16	25
	17	25
124398-49700	8	18 -1
124413-39100	14	28
124460-11340	7	29
124460-77680	19	19
	20	5
	47	8
124550-01590	2	24 -1
124550-51350	25	31
124550-51370	25	32
124550-59820	15	4
124550-77030	35	27
124770-77940	39	2
124950-51190	25	16
124976-34850	1	31
127412-91250	40	9
	41	10
128170-13600	19	17
	33	5
128170-86501	32	21
128271-77200	36	1
128271-77720	36	4
128271-77730	36	4 -1
128271-77740	36	6
128271-77750	36	7
128377-07150	6	1
128377-07190	6	6
128377-07260	6	2

Parts No.	Fig. No.	Ref. No.
128377-07350	6	3
	38	34
		35
128377-07400	6	7
128377-07420	6	8
128377-07450	6	9
128377-07460	6	10
128377-08350	4	8
128377-08351	4	8 -1
128391-77720	39	29
128397-44500	19	24
128397-44510	19	26
128990-49320	18	36
		37
128990-49400	18	39
128990-59131	31	2 -1
128990-59540	30	20 -1
128990-59700	31	1 -1
128990-59890	8	19
128990-77430	9	12 -1
	38	2 -1
		23 -1
		33 -1
	39	8 -1
128990-77550	39	10 -1
128990-77610	38	1 -1
		22 -1
		32 -1
	39	7 -1
128990-77910	9	18
128990-77911	9	18 -1
129001-01250	1	6
129001-01340	1	33
	43	2
	49	2
129001-02930	1	25
129001-02931	1	25 -1
129001-32330	2	11
129001-91841	2	22
129004-01520	2	12
129004-03010	8	2
129004-11100	7	24
129004-11101	7	24 -1
129004-11130	7	24 -2
129004-11241	7	4
129004-11251	7	5
129004-11310	8	10
	43	8
129004-11350	8	1
129004-11650	7	10

Parts No. Index

Parts No.	Fig. No.	Ref. No.
129004-11900	7	33
129004-21001	12	1
129004-21002	12	1 -1
129005-21650	12	11
129005-22080	13	1
129005-22500	13	3
	49	7
129005-22900	13	19
129005-22950	13	21
129006-35100	14	9
129006-44480	14	14
129052-42050	18	3
129052-42310	18	4
129052-61051	26	5
129052-61060	26	6
129052-61071	26	7
129052-61390	26	18
129054-42320	18	2
129100-01580	3	1
		5
	12	2
129100-01640	3	6
129100-01730	5	5
129100-11110	7	25
129100-11111	7	25 -1
129100-11112	7	25 -2
129100-23910	13	16
129100-51570	25	49
129100-59951	30	24
129100-61400	26	19
129100-61440	26	80
129100-77510	9	17
129120-77501	9	16
129120-77502	9	16 -1
129129-14580	11	3
129150-01200	1	32
129150-01881	16	22
		26
	17	22
		26
	43	17
129150-02020	1	10
129150-02450	11	4
129150-02870	1	34
129150-02930	1	28
129150-02931	1	28 -1
129150-02940	1	37
129150-03070	8	3
129150-03100	38	21
129150-11230	7	11

Parts No.	Fig. No.	Ref. No.
129150-11280	7	9
129150-11370	7	14
129150-11750	7	13
129150-11810	7	21
129150-12111	9	2
	43	10
	49	4
129150-13110	19	18
	43	21
	49	5
129150-14101	11	7
129150-14200	11	1
129150-14400	11	2
129150-23600	13	14
129150-23601	13	14 -1
129150-23610	13	17
129150-25301	25	76
129150-25931	25	75
129150-35042	14	5
	43	13
129150-35091	14	1
129150-35111	14	12
	43	14
129150-42059	18	3 -1
129150-42129	18	7
129150-42300	18	6
129150-42301	18	6 -1
129150-42319	18	4 -1
129150-49811	18	28 -1
	43	20 -1
	49	21
129150-59120	29	1
129150-59131	29	4
129150-59580	30	38
129150-77511	9	6
	43	11
129155-51020	25	4
129155-51180	25	15
129155-51200	25	17
129155-51270	25	24
129155-51280	25	25
	26	2
129155-51380	25	34
129155-51390	25	35
129155-51400	25	36
129155-51410	25	37
129155-51420	25	38
129155-51450	25	39
129155-51500	25	44
129155-51530	25	46

Parts No.	Fig. No.	Ref. No.
129155-51540	25	47
129155-51550	25	48
129155-51570	25	51
129155-51580	25	52
129155-51591	25	53
129155-51600	25	54
129155-51630	25	21 A
129155-51701	25	55
129155-51711	25	56
129155-51751	25	57
129155-51761	25	58
129155-51790	25	59
129155-52051	27	2
129155-61120	26	8
129155-61130	26	9
129155-61140	26	10
129155-61341	26	15
129155-61350	26	16
129155-61360	26	17
129155-61430	26	22
129155-61450	26	26
129155-61460	26	27
129155-61480	26	28
129155-61830	26	60
129155-61950	26	62
129156-44760	18	32
129156-51910	25	60
129158-52000	25	74
	27	1
129158-52100	27	3
129158-52101	27	3 -1
129170-12100	9	1
129170-49010	20	2
	47	1
129171-49900	20	16
129171-51040	25	5
129171-85900	34	2
129190-51590	25	53 -1
129202-22300	13	7
129208-54500	25	68
129209-61370	26	63
129209-61920	26	77 -1
129209-61930	26	84
129209-61940	26	89
129209-61970	26	87
129263-42120	18	7 -1
129270-21591	12	8
129270-44410	19	7
129270-44500	19	25
129270-44501	19	25 -1

Parts No.	Fig. No.	Ref. No.
129270-44910	19	1
129270-49040	20	4
	47	2
129270-49210	21	2
		6
129270-49400	18	17
129270-59550	30	21
129270-59580	30	23
129270-81110	33	2
129270-81120	33	1
129270-81170	33	3
129270-81180	33	4
129270-92100	42	1
129270-92600	42	2
129270-92610	42	5
129270-92620	42	6
129270-92630	42	7
129270-92640	42	8
129270-92650	42	3
129270-92690	42	4
129271-01500	2	1
129271-01700	5	1
129271-03090	8	17
129271-03091	8	17 -1
129271-07560	6	11
129271-08390	4	11 -2
129271-11700	7	15
129271-12310	9	8
129271-12311	9	8 -1
129271-12350	9	9
129271-12410	9	10
129271-12810	9	11
129271-21350	38	8
129271-34880	5	11
129271-39450	15	2
129271-42000	18	1
129271-42001	18	1 -1
129271-42280	18	35
129271-42500	16	1
129271-42501	16	1 -1
129271-42510	16	8
	17	8
129271-42700	16	21
129271-49010	20	3
129271-49040	20	23
129271-49110	20	11
		24
	21	9
129271-49210	20	21
129271-49220	21	8

Parts No. Index

Parts No.	Fig. No.	Ref. No.
129271-49250	21	5 -1
		5 -2
129271-55660	30	5 -1
129271-59300	30	18 -1
129271-59530	30	19 -1
129271-59810	29	6
129271-59820	29	10
129271-59830	29	14
129271-67100	32	1
129271-77220	44	4
129271-77221	44	4 -1
129271-77230	44	29
129271-77231	44	29 -1
129271-77240	44	5
		33
129271-77250	44	6
129271-77260	44	7
129271-77270	44	8
129271-77271	44	8 -1
129271-77280	44	9
129271-77290	44	10
129271-77310	38	9
129271-77311	38	9 -1
129271-77330	38	10
129271-77340	44	11
129271-77350	44	12
129271-77360	44	13
129271-77370	44	14
129271-77380	44	15
129271-77390	38	36
129271-77400	38	3
129271-77401	38	3 -1
129271-77410	38	4
		4 -1
		24
129271-77411	38	4 -2
		24 -1
129271-77420	38	7
		25
129271-77421	38	7 -1
		25 -1
129271-77430	38	20
		26
129271-77440	38	27
129271-77480	38	37
129271-77490	38	38
129271-77500	38	28
129271-77501	38	28 -1
129271-77510	38	29
129271-77570	44	17

Parts No.	Fig. No.	Ref. No.
129271-77580	44	4 C
129271-77590	44	32
129271-77600	44	4 A
129271-77610	44	30
129271-77620	44	4 B
		31
129271-77720	44	4 A-1
		30 -1
129271-77910	39	1
129271-77911	39	1 -1
129271-77920	9	21
129271-77921	9	21 -1
129271-77930	38	11
129271-77931	38	11 -1
129271-77950	26	85
129271-77960	39	11
129271-91110	40	1
129271-91111	40	1 -1
129271-91112	40	1 -2
129271-91113	40	1 -3
129271-91120	40	2
129271-91130	40	3
	45	2
129271-91131	40	3 -1
	45	2 -1
129271-91132	40	3 -2
	45	2 -2
129271-91140	40	4
	45	3
129271-91150	40	5
129271-91160	41	1
129271-91161	41	1 -1
129271-91162	41	1 -2
129271-91163	41	1 -3
129271-91170	41	2
129271-91180	41	3
	46	2
129271-91181	41	3 -1
	46	2 -1
129271-91182	41	3 -2
	46	2 -2
129271-91190	41	4
	46	3
129271-91200	41	5
129271-91210	40	6
	41	6
	45	4
	46	4
129271-91211	40	6 -1
	41	6 -1

Parts No.	Fig. No.	Ref. No.
129271-91211	45	4 -1
	46	4 -1
129271-91220	40	7
	41	7
129271-91230	40	8
	41	8
	45	5
	46	5
129271-91240	41	9
	46	6
129271-91250	41	11
	46	7
129271-91260	40	10
	41	12
129271-91300	45	1
129271-91301	45	1 -1
129271-91302	45	1 -2
129271-91310	45	6
129271-91320	45	7
129271-91330	45	8
	46	8
129271-91340	45	9
	46	9
129271-91350	46	1
129271-91351	46	1 -1
129271-91352	46	1 -2
129271-91360	46	10
129271-91370	46	11
129301-34830	44	1
129410-03990	8	18
129417-33110	14	8
129417-33111	14	8 -1
129417-35150	14	11
129418-32320	2	10
129461-59580	30	39
129470-07230	7	2
129470-13541	10	4
129470-49220	21	3
129470-49250	21	5
129470-49540	18	25
129470-49801	18	27
	49	20
129470-49810	18	28
	43	20
129470-51080	25	8
129470-51101	25	10
129470-55610	30	2
129470-55810	30	3
	49	25
129470-59122	30	9

Parts No.	Fig. No.	Ref. No.
129470-59530	30	19
129470-59542	30	20
129470-59562	30	22
129470-61650	26	82
129470-67200	32	2
129470-86500	32	19
129470-92300	42	9
129470-92310	42	10
129470-92320	42	11
129472-13560	10	5
129472-18090	10	2
		10
	43	12
	49	6
129486-01670	3	9
129486-12581	9	5
129486-42050	18	16
	43	18
129486-51060	25	7
129486-61201	26	11
129486-61202	26	11 -1
129486-61540	26	52
129490-49070	20	15
129495-59300	30	18
129495-77330	18	21
129508-32111	2	18
129508-32120	2	19
129508-33010	14	7
129508-33050	14	7 A
129508-49030	14	16
129508-49040	14	20
129550-42350	18	31
129570-59121	30	10
129570-77960	39	24
129573-51330	25	29
129573-51340	25	30
129573-51370	25	33
129574-77710	39	27
129574-77720	39	28
129574-77740	39	30
129574-77980	39	25
129602-53001	28	2
	49	22
129608-77010	35	1
129608-77110	35	4
129612-77710	36	3
129670-01600	3	2
129670-01601	3	2 -1
129670-07230	7	2 -1
		2 -2

Parts No. Index

Parts No.	Fig. No.	Ref. No.
129670-07230	19	17 A
129670-08100	4	9
129670-08110	4	1
129670-08120	4	2
129670-08130	4	3
129670-08340	4	7
129670-08341	4	7 -1
129670-08350	4	11
129670-08351	4	11 -1
129670-13560	10	1
129670-13561	10	1 -1
129670-13580	10	11
		11 -1
129670-13600	19	17 -1
	33	5 -1
129670-34800	5	10
129670-39600	39	19
129670-39990	14	29 -1
129670-42511	17	1
129670-42512	17	2 -1
129670-42520	16	6
	17	6
	49	16
129670-42530	16	3
	17	3
129670-42531	16	3 -1
	17	3 -1
	49	17
129670-42540	16	5
	17	5
	49	18
129670-42550	16	7
	17	7
129670-42560	16	11
	17	11
129670-42570	16	20
	17	20
129670-42580	16	17
	17	17
129670-42700	17	21
129670-44150	19	6
129670-44430	19	8
129670-44450	19	11
129670-44570	19	27
129670-49110	47	3
129670-49150	20	9
129670-49200	10	6
129670-49280	10	6 -1
129670-49290	20	1
	21	1

Parts No.	Fig. No.	Ref. No.
129670-49290	47	4
129670-49390	18	38
129670-49500	10	9
	20	6
		10
		17
		22
		26
	21	7
		7 -1
	22	13
	47	7
129670-51300	25	26
129670-55700	30	4 -1
129670-59120	30	9 -1
129670-59130	30	10 -1
129670-59560	30	22 -1
129670-67110	32	16 -1
129670-77030	35	27 -1
129670-77340	36	8
	37	23
129670-77350	36	8 -1
	37	23 -1
129670-77370	36	9 -2
	37	24 -2
129670-77380	36	10 -1
	37	25 -1
129670-77800	33	8
129670-77810	33	9
129670-77820	33	10
129670-77830	33	11
129670-77940	39	2 -1
129670-81850	12	20
129670-85900	34	3
129671-49110	20	20
129671-49120	20	25
129671-92110	42	13
129671-92120	42	14
129671-92130	42	15
129673-44090	19	4
129673-44130	19	5
129673-44131	19	5 -1
129673-49230	21	4
129693-44300	7	40
129695-77370	36	9
	37	24
129695-77371	36	9 -1
	37	24 -1
129695-77380	36	10
	37	25

Parts No.	Fig. No.	Ref. No.
129698-77020	35	2
129698-77101	35	3
129698-77120	35	5
129698-77130	35	7
129698-77140	35	6
129698-77150	35	8
129698-77161	35	9
129698-77170	35	10
129698-77180	35	17
129698-77190	35	18
129698-77200	35	19
129698-77210	35	20
129698-77220	35	21
129698-77230	35	22
129698-77240	35	15
129698-77250	35	16
129698-77260	35	11
129698-77270	35	13
129698-77280	35	14
129795-01780	3	8
129795-01800	2	6
129795-01950	2	16
129795-02411	1	13
129795-02412	1	13 -1
129795-11120	7	26
129795-11180	7	27
129795-21661	12	12
129795-48800	22	1
129795-49551	18	26
	43	19
	49	19
129900-07900	7	1
129900-32130	2	9
129900-77810	36	3 -1
129916-49740	18	5 -1
129C26-01890	16	26 -1
	17	26 -1
	43	17 -1
138603-59380	31	4
158552-61900	26	72 -1
158600-51170	25	14 -1
158600-51270	25	24 -1
158600-51410	25	37 -1
158600-51420	25	38 -1
158600-51570	25	51 -1
158600-51790	25	59 -1
171008-03990	14	17
		24 -1
171051-01921	1	9
171087-42280	49	15

Parts No.	Fig. No.	Ref. No.
171353-61700	26	83
174307-51170	25	14
174307-51700	26	34
177070-03520	12	16
177088-02430	6	5
177099-03500	12	18
194250-51660	44	2
196420-02310	4	15
196440-02390	4	16
196440-04310	12	18 -1
196630-12980	6	12
22117-040000	26	65
22137-080000	10	12
	30	40
	36	11
	37	26
	38	12
		13
	39	4
	44	18
22137-100000	36	12
	37	27
22137-120000	44	19
22157-080000	38	5
		30
	39	12
22190-060003	26	66
22190-080002	2	24 A
	15	5
	30	33
	43	15
22190-100002	15	3
	26	67
	43	16
22190-120002	26	68
	30	14
		34
	43	22
22190-140002	5	14
	30	35
	43	7
22190-160002	25	61
22217-050000	25	62
	32	7
22217-060000	9	22
	25	63
	39	13
22217-080000	5	15
	18	33
	32	8

Parts No. Index

Parts No.	Fig. No.	Ref. No.
22217-080000	39	5
22217-100000	5	16
22217-120000	4	17
	25	70
22242-000100	32	6
22252-000260	13	8
22287-120000	26	69
22351-030010	12	14
22351-050010	25	64
22351-060012	7	35
22372-040000	26	70
22414-250150	32	9
22512-070140	11	8
	12	5
22724-800380	35	26
22857-500100	8	11
		12
23000-013000	30	11
		17
23000-016000	30	13
		32
23000-048000	9	14
23000-060000	9	13
23010-013000	19	28
23010-014000	31	5
23061-070300	19	20
	20	7
	47	9
23072-101000	22	12
23080-015000	14	19
		23
23080-018000	14	24
23414-080000	32	10
	43	23
23414-120016	26	88
23414-140000	5	3
23414-170000	19	15
23857-060000	30	15
		37
23857-080000	5	17
23875-010000	39	20
23875-030000	18	5
		19
23876-030000	2	4
23876-040000	2	5
23887-100002	26	71
23887-140002	5	4
23887-180002	39	22
23893-030002	19	16
23894-030002	19	16 -1

Parts No.	Fig. No.	Ref. No.
24311-000060	22	11
24311-000120	8	14
	43	9
24311-000150	26	91
24311-000320	2	23
	8	15
	43	5
24316-000150	25	32 -1
24341-000160	25	65
24341-000240	2	29
	43	6
24341-000280	26	72
24358-240310	18	4 -2
25132-003800	38	14
25152-004300	18	20
26013-080142	12	15
		19
26013-080652	18	34 -1
26022-050122	25	66
26022-060162	25	67
26106-060082	9	23
	39	14
26106-060102	18	22
	26	73
		74
26106-060122	39	15
26106-060142	18	8
	26	75
26106-060162	2	30
26106-060202	18	9
	26	76
26106-080102	30	36
26106-080122	20	12
		27
	32	15
26106-080142	11	9
26106-080162	2	24
		24 B
		25
	5	9
		18
	7	3
		39
	9	15
	12	17
	17	27
	20	8
		28
	39	6
	47	10

Parts No.	Fig. No.	Ref. No.
26106-080202	9	7
	12	19 -2
	14	15
	16	23
	33	6
	39	16
26106-080222	12	19 -1
	44	20
26106-080252	5	7
	7	36
	9	3
	16	27
	17	23
	18	29
	32	11
	36	13
	37	28
	38	15
		16
26106-080352	3	10
	7	37
	9	4
		24
	14	6
	18	30
26106-080402	11	14
26106-080452	5	8
26106-080502	7	38
26106-080552	2	26
	18	23
		24
26106-080652	18	34
26106-080852	2	22 -1
26106-081002	19	21
26106-100122	5	19
26106-100162	5	19 -1
26106-100222	4	4
		10
26106-100302	4	5
	38	15 -1
		17
26106-100322	34	4
		9
		12
26106-100352	44	21
26116-050302	25	22
26116-060162	18	10
		10 -1
26116-080302	22	14
26116-080752	44	22

Parts No.	Fig. No.	Ref. No.
26116-080904	38	18
26116-081004	44	23
26116-120252	4	6
26116-120302	35	24
26116-120452	44	24
26116-120502	44	25
26116-120652	44	26
26206-100252	3	3
26206-100302	3	4
26216-081002	19	22
26216-100402	30	5
26306-080002	2	27
	16	28
	30	6 -1
	32	12
	38	6
		19
		31
26306-100002	30	6
26366-080002	5	20
	17	24
	19	23
	26	86
	33	7
26450-080162	19	17 B
26450-080282	34	13
26450-080302	34	13 -1
26557-050122	32	13
26577-060142	18	8 -1
26664-080002	22	7
26703-080002	10	3
		8
	22	15
26706-100002	34	5
		10
		14
26716-050002	32	14
26716-060002	25	23
26716-080002	30	7 -1
	44	27
26716-100002	30	7
26716-120002	4	18
	25	71
	42	12
	44	28
26736-120002	26	77
26756-060002	26	78
26756-080002	34	6
	35	28
26776-120002	26	79

Parts No. Index

Parts No.	Fig. No.	Ref. No.
27241-120000	1	14
27241-300000	1	15
27241-400000	7	23
27310-080001	7	30
27730-301400	32	18 -1
29622-250001	44	2 -1
41701-001720	32	16
41710-000380	32	18
41710-000410	32	17
41730-000681	32	20
43530-500570	20	18
43662-025030	20	19
43662-025031	20	19 -1
43720-001220	14	29
48110-032411	34	7
48110-032502	34	1
711100-51540	25	20
729005-01560	1	1
729271-51450	25	1
729271-92600	43	1
729402-23100	13	9
729602-53101	28	1
83213-003012	31	7
977780-01200	24	1
977780-01210	23	1
977780-01211	23	1 -1
	24	1 -1
	48	1
977780-01230	23	2
	24	2
977780-01240	24	3
977780-01250	23	3
977780-03000	23	9
	24	9
	48	9
X00190001	16	13
	17	13
X00370017	16	16
	17	16
X00371040	16	19
	17	19
X0044021509	23	7
	24	7
	48	7
X01357681	17	18
X0146531	16	4
	17	4
X02230015	16	12
	17	12
X02233001	16	14

Parts No.	Fig. No.	Ref. No.
X02233001	17	14
X0318101004	48	2
X03431483	16	10
	17	10
X158606410X	48	3
X179100011X	24	5
X179100021X	23	5
X179100022X	48	5
X179100100X	23	6
	24	6
	48	6
X199903800X	23	8
	24	8
X199906101X	48	8
X2114535200	35	12
X6303BM0000	37	18
X8636008003	23	4
	24	4
X8636015001	48	4
XL150M14041	37	17
XL155G1330	37	8
XL180120000	37	4
XL1808320	37	13
XL180G13012	37	6
XL180G43150	37	7
XL180G61000	37	2
XL180G63006	37	5
XL180G85001	37	22
XL225431800	37	11
XL225G1325	37	9
XL235340110	37	16
XTST25S001	22	2
XTST25S002	22	3
XTST25S003	22	4
XTST25S004	22	5
XTST25S005	22	6
XTST25S007	22	8
XTST25S008	22	9
XTST25S009	22	10

Parts No.	Fig. No.	Ref. No.

Parts No.	Fig. No.	Ref. No.