YANMAR

PARTS CATALOG

0CR10-M42600EN

Last update Nov., 2017

はじめに

1．本パーツカタログは、3JH2-E,3JH2-BEのエンジン及び、KM3A,KBW10Eの減速逆転機を展開しています。

パーツカタログNo　000Y00R4260
発行時期　1993年　6月

2．機種名称及び機種コード，減速逆転機

機種名称	機種コード	減速逆転機名称	減速比
3JH2S-BE	Q29170A	KM3A	2.33
3JH2G-BE			2.64
3JH2GG-BE			3.21
3JH2S-E		KBW10E	2.14
3JH2G-E			2.45
3JH2GG-E			2.83

3．機種塗装色　ウレタンメタリックエコールシルバー
尚、部品供給は、メタリックエコールシルバーを供給します。
部品番号　977620-10070　1L（缶入り）
977620-40070　4L（缶入り）
977620-30071　スプレー（1本）

PREFACE

1．This parts catalog develops Model 3JH2-E,3JH2-BE engine & Model KM3A,KBW10E marine gear.

Issue No.　:000Y00R4260
Date of Issue :June,1993

2．Model,Model code & clutch

Model	Model code	Clutch	Reduction ratio
3JH2S-BE	Q29170A	KM3A	2.33
3JH2G-BE			2.64
3JH2GG-BE			3.21
3JH2S-E		KBW10E	2.14
3JH2G-E			2.45
3JH2GG-E			2.83

3．Engine painting color -------- Urethane metallic echol silver.
Replecement parts painted in metallic echol silver are supplied.
Parts No.　977620-10070　1ℓ(can)
977620-40070　4ℓ(can)
977620-30071　Spray(one)

KM3A　ダンメンズ
SECTIONAL VIEW

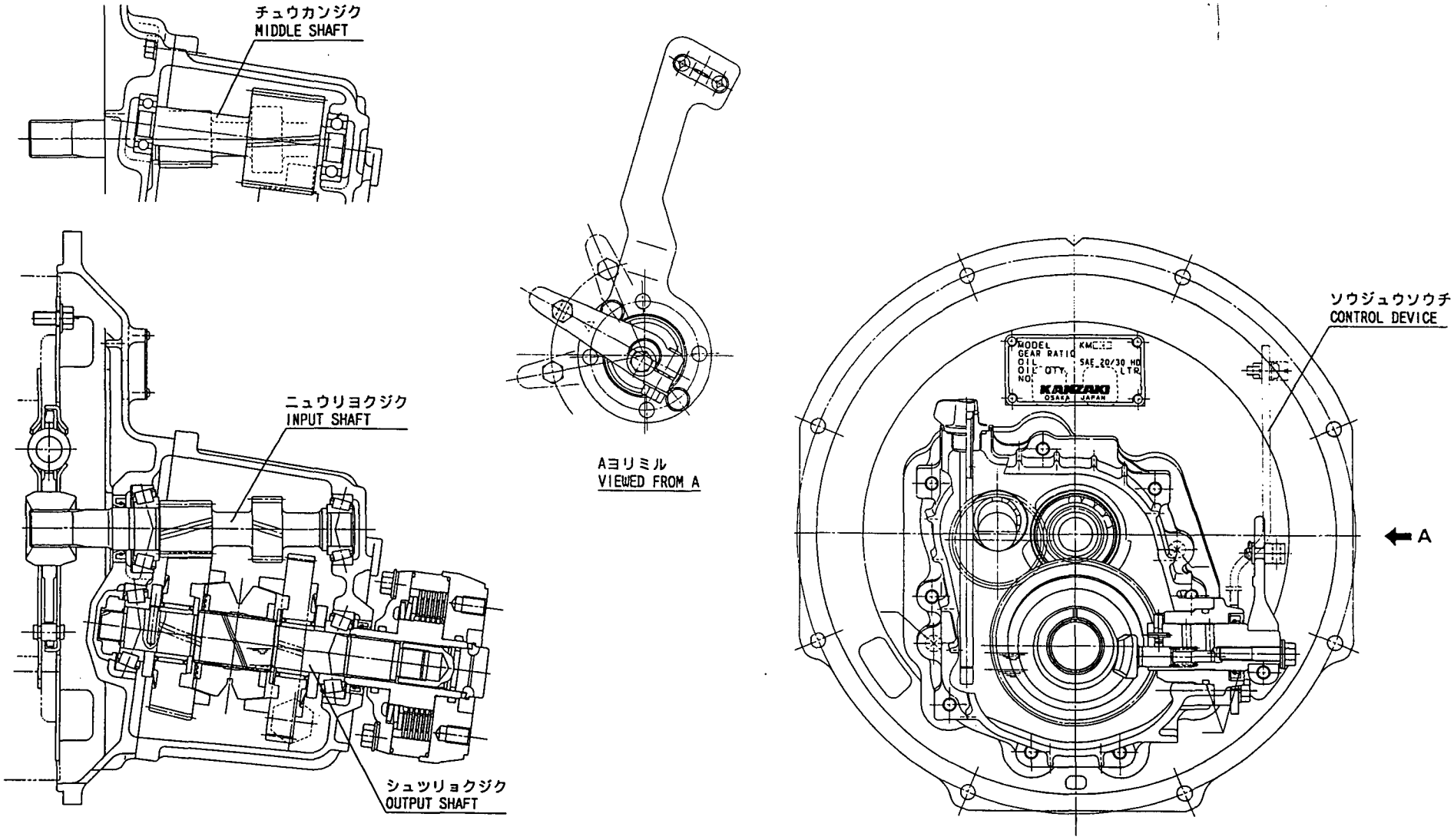

KBW10-E ダンメンズ
SECTIONAL VIEW

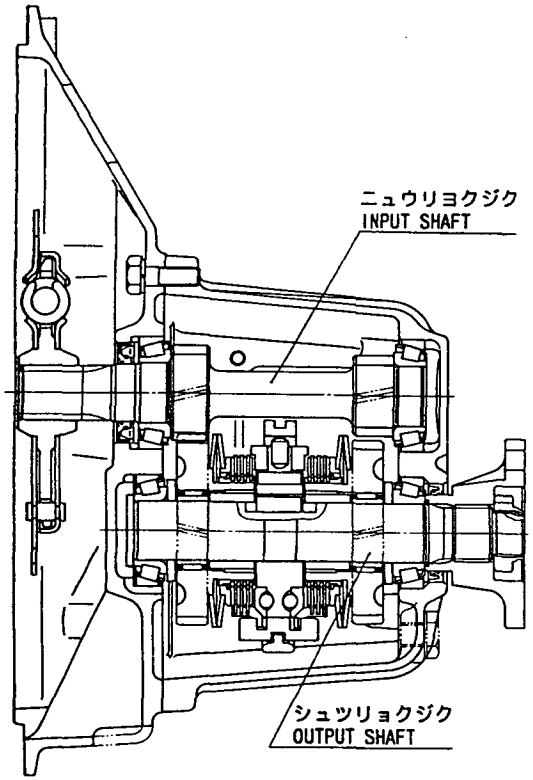

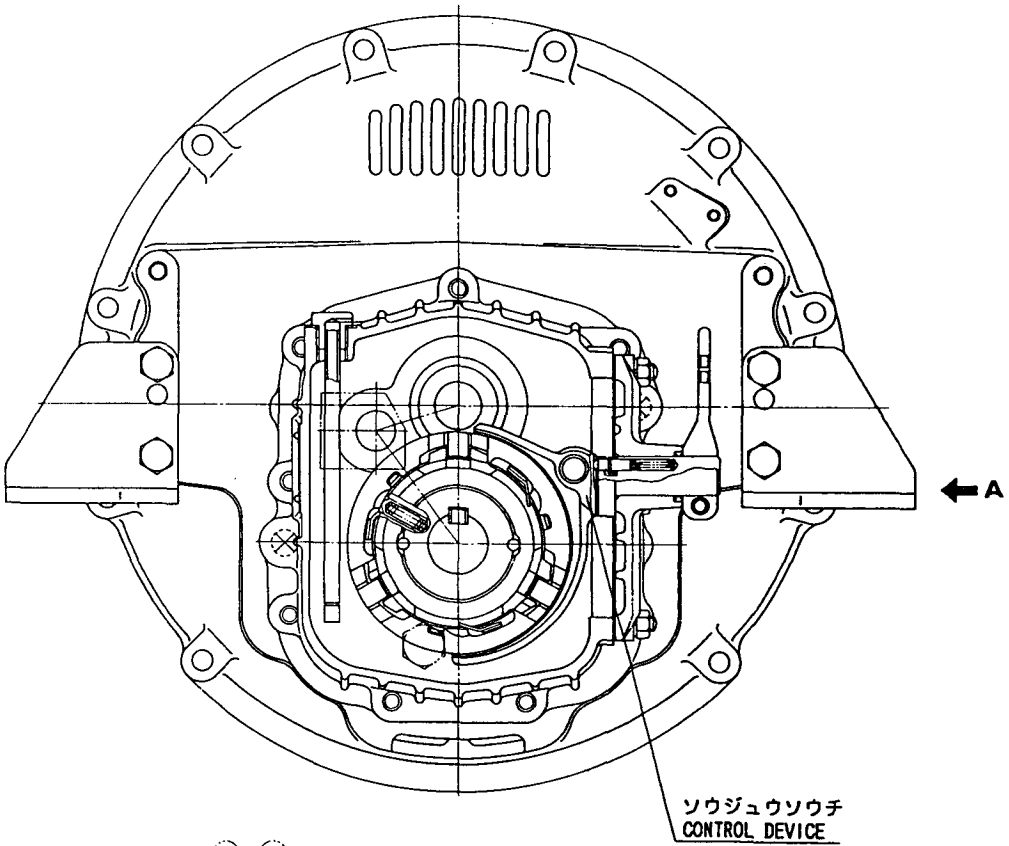

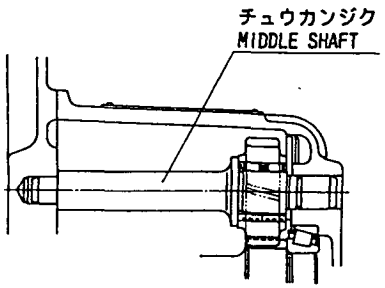

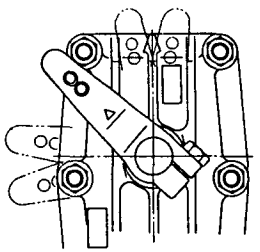

Aヨリミル
VIEWED FROM A

Contents

0CR10-M42600

Fig. No.	Fig. Name
3JH2E/BE	
1.	CYLINDER BLOCK
2.	GEAR HOUSING
3.	FLYWHEEL HOUSING & LUB. OIL SUMP
4.	LABEL
5.	ENGINE BRACKET
6.	CYLINDER HEAD
7.	BONNET
8.	SUCTION MANIFOLD
9.	CAMSHAFT & DRIVING GEAR
10.	CRANKSHAFT & PISTON
11.	LUB. OIL SYSTEM
12.	LUB. OIL COOLER
13.	LUB. OIL PIPE
14.	COOLING SEA WATER SYSTEM
15.	COOLING FRESH WATER SYSTEM
16.	COOLING FRESH WATER COOLER
17.	FUEL INJECTION PUMP
18.	FUEL FEED PUMP
19.	FUEL INJECTION PIPE & FUEL INJECTION VALVE
20.	TIMER
21.	FUEL PIPE
22.	GOVERNOR
23.	ENGINE STOP DEVICE
24.	SPEED REMOTE CONTROL DEVICE
25.	STARTING MOTOR
26.	GENERATOR
27.	WIRE HARNESS
28.	TOOL
29.	CLUTCH
30.	GENERATOR(OPTIONAL)
31.	MIXING ELBOW(OPTIONAL)
32.	OIL SUC. PUMP/DRAIN & BILGE PUMP(OPTIONAL)
33.	OIL SUC. PUMP/DRAIN & BILGE PUMP(OPTIONAL)
34.	SEA WATER STRAINER(OPTIONAL)
35.	FUEL TANK(OPTIONAL)
36.	ENGINE STOP DEVICE(OPTIONAL)
37.	SENSOR(OPTIONAL)
38.	REMOTE CONTROL DEVICE(OPTIONAL)
39.	PANEL(B TYPE)(OPTIONAL)
40.	PANEL(C TYPE)(OPTIONAL)
41.	REPAIR SET(OPTIONAL)
42.	GASKET SET(OPTIONAL)
43.	CLUTCH HOUSING
44.	INPUT SHAFT & SURPORT SHAFT
45.	OUTPUT SHAFT
46.	REMOTE CONTROL DEVICE
47.	REMOTE CONTROL PASSIVE UNIT
48.	CLUTCH HOUSING
49.	INPUT SHAFT & SURPORT SHAFT

Contents

0CR10-M42600

Fig. No.	Fig. Name
50.	OUTPUT SHAFT
51.	REMOTE CONTROL DEVICE
52.	TOOL(OPTIONAL)

Fig. No.	Fig. Name

Fig.1. CYLINDER BLOCK

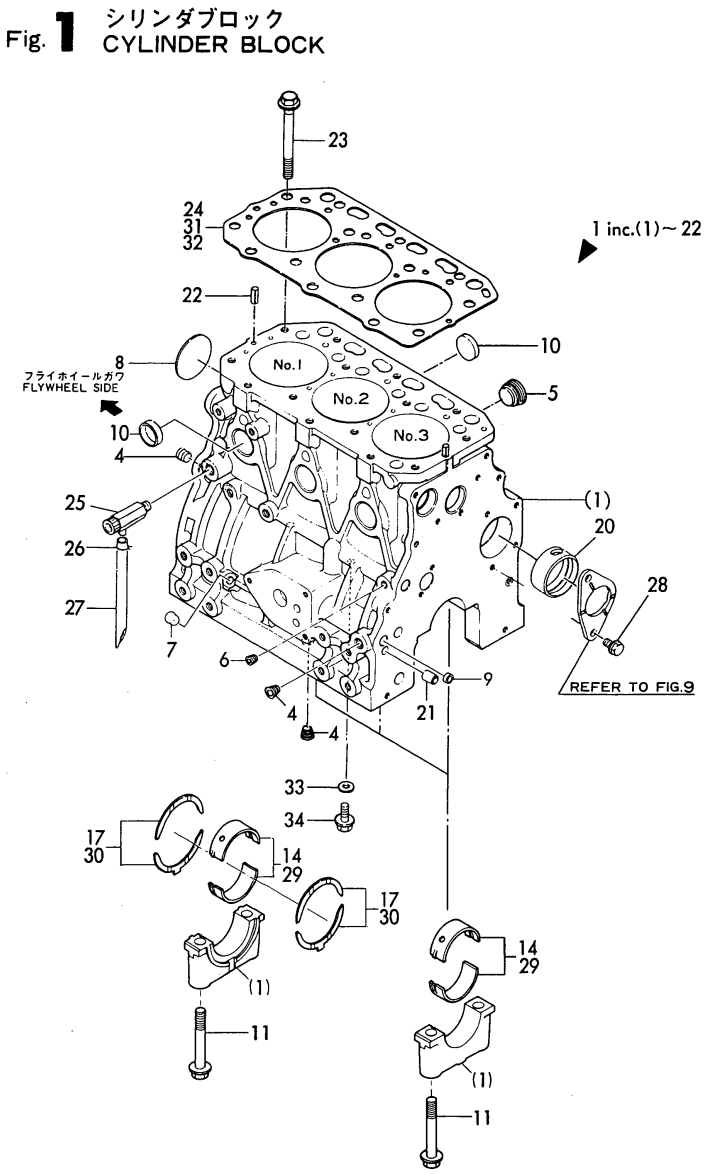

Remarks
1) UNDER SIZED METAL(0.25)
2) OVER SIZED METAL(0.25)
3) STANDARD
4) ADJUSTMENT

(A)=3JH2E (D)=
(B)=3JH2BE (E)=
(C)= (F)=

No.	Lev.	Parts No.	Description	Q'ty (A)	(B)	(C)	(D)	(E)	(F)	I	R
1	1	729171-01560	BLOCK ASSY, CYLINDER	1	1						
4	3	119600-01050	PLUG, PT1/4	3	3						
5	3	171051-01921	PLUG, NPTF1	1	1						
6	3	23871-010000	PLUG, R01	1	1						
7	3	27225-100140	PLUG, 10X14	1	1						
8	3	27231-500000	PLUG 50	1	1						
9	3	27241-120000	PLUG, 12	2	2						
10	3	27241-300000	PLUG 30	6	6						
11	2	129150-02020	BOLT, METAL CAP	8	8						
14	2	129150-02800	BEARING, MAIN	4	4						
17	2	129150-02930	BEARING, THRUST	2	2						
20	2	129795-02411	BUSH, CAMSHAFT	1	1						
21	2	129795-01950	PIPE, KNOCK L=18	2	2						
22	2	22351-060012	PIN, SPRING 6.0X12	2	2						
23	1	129150-01200	BOLT, HEAD	14	14						
24	1	129171-01330	GASKET, HEAD T=1.4	1	1						3
25	1	128371-01800	COCK ASSY, 1/4	1	1						
26	1	124460-77680	RETAINER	1	1						
27	1	23061-070300	PIPE, 7X 300	1	1						
28	1	26106-080162	BOLT, M8X 16 PLATED	2	2						
29	1	129150-02870	BEARING, 0.25 US	4	4						1
30	1	129150-02940	BEARING, THRUST 0.25	2	2						2
31	1	129171-01320	GASKET, HEAD T=1.3	1	1						4
32	1	129171-01340	GASKET, HEAD T=1.5	1	1						4
33	1	23414-080000	GASKET, 8X1.0	3	3						
34	1	26106-080122	BOLT, M8X 12 PLATED	3	3						

N:Old $\xleftrightarrow[\text{No}]{\text{Yes}}$ New, Q:Old $\xleftrightarrow[\text{Yes}]{\text{No}}$ New, R:Old $\xleftrightarrow[\text{Yes}]{\text{Yes}}$ New, S:Old $\xleftrightarrow[\text{No}]{\text{No}}$ New, W:Add, Z:Discontinued, F:Interchangeable by set, K:Q'ty Change

Copyright (C) YANMAR CO., LTD. All RightsReserved.

Fig.2. GEAR HOUSING

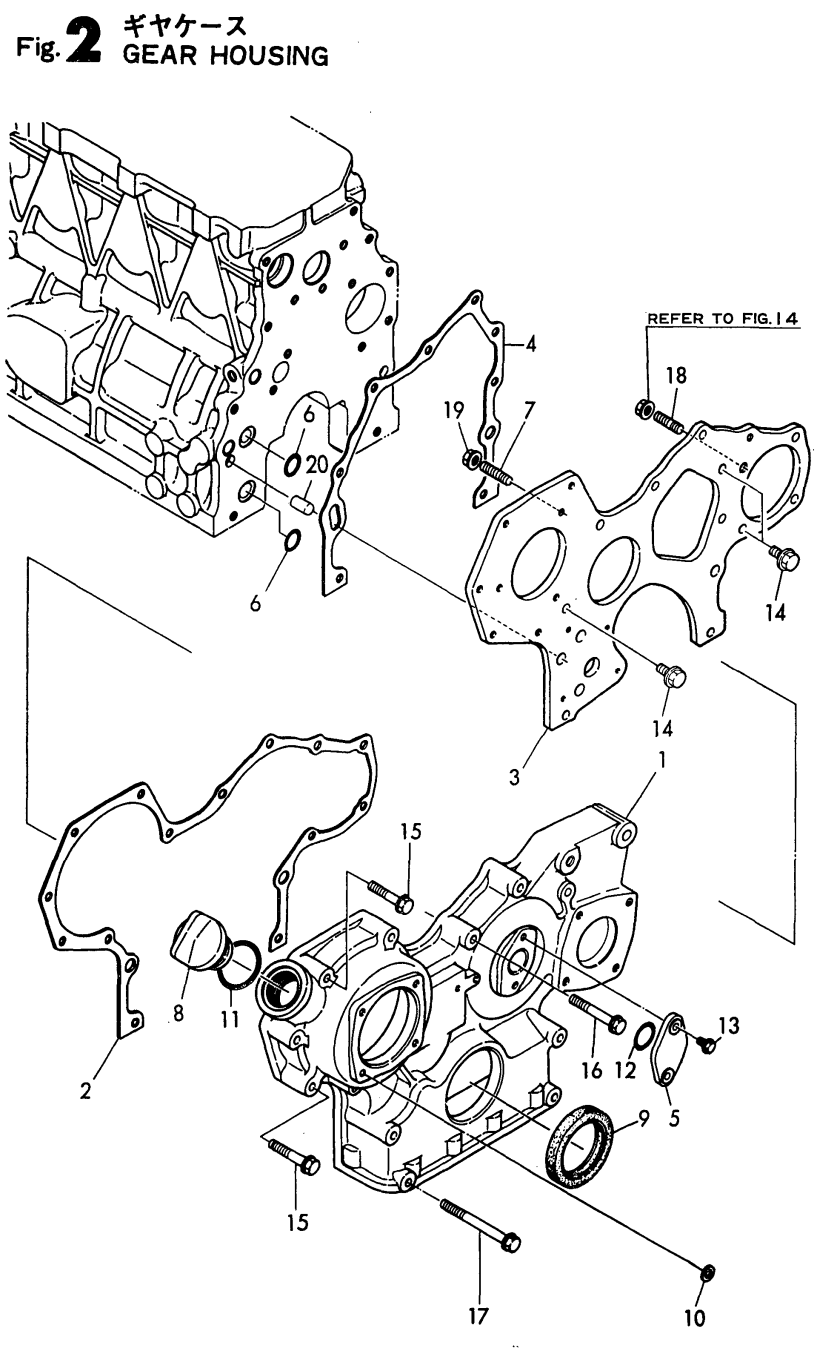

(A)=3JH2E
(B)=3JH2BE
(C)=
(D)=
(E)=
(F)=

No.	Lev.	Parts No.	Description	Q'ty (A)	(B)	(C)	(D)	(E)	(F)	I	R
1	1	129470-01501	CASE, GEAR	1	1						
2	1	129470-01510	GASKET, GEAR CASE	1	1						
3	1	129100-01520	FLANGE, GEAR CASE	1	1						
4	1	129470-01531	GASKET	1	1						
5	1	121023-01550	COVER	1	1						
6	1	129470-01550	O-RING	2	2						
7	1	121450-01560	STUD, M8X22	3	3						
8	1	124160-01751	COVER, FILLER	1	1						
9	1	129795-01800	SEAL, OIL	1	1						
10	1	23414-080000	GASKET, 8X1.0	4	4						
11	1	24311-000320	O-RING, 1AP32.0	1	1						
12	1	24341-000260	O-RING, 1AS26.0	1	1						
13	1	26106-060162	BOLT, M6X 16 PLATED	2	2						
14	1	26106-080162	BOLT, M8X 16 PLATED	3	3						
15	1	26106-080452	BOLT, M8X 45 PLATED	6	6						
16	1	26106-080552	BOLT, M8X 55 PLATED	3	3						
17	1	26106-080852	BOLT, M8X 85 PLATED	4	4						
18	1	26216-080182	STUD, M8X 18	1	1						
19	1	26366-080002	NUT, M8	3	3						
20	1	129795-01950	PIPE, KNOCK L=18	2	2						

N:Old $\overset{\text{Yes}}{\underset{\text{No}}{\leftrightarrow}}$ New, Q:Old $\overset{\text{No}}{\underset{\text{Yes}}{\leftrightarrow}}$ New, R:Old $\overset{\text{Yes}}{\underset{\text{Yes}}{\leftrightarrow}}$ New, S:Old $\overset{\text{No}}{\underset{\text{No}}{\leftrightarrow}}$ New, W:Add, Z:Discontinued, F:Interchangeable by set, K:Q'ty Change

Copyright (C) YANMAR CO., LTD. All RightsReserved.

Fig.3. FLYWHEEL HOUSING & LUB. OIL SUMP

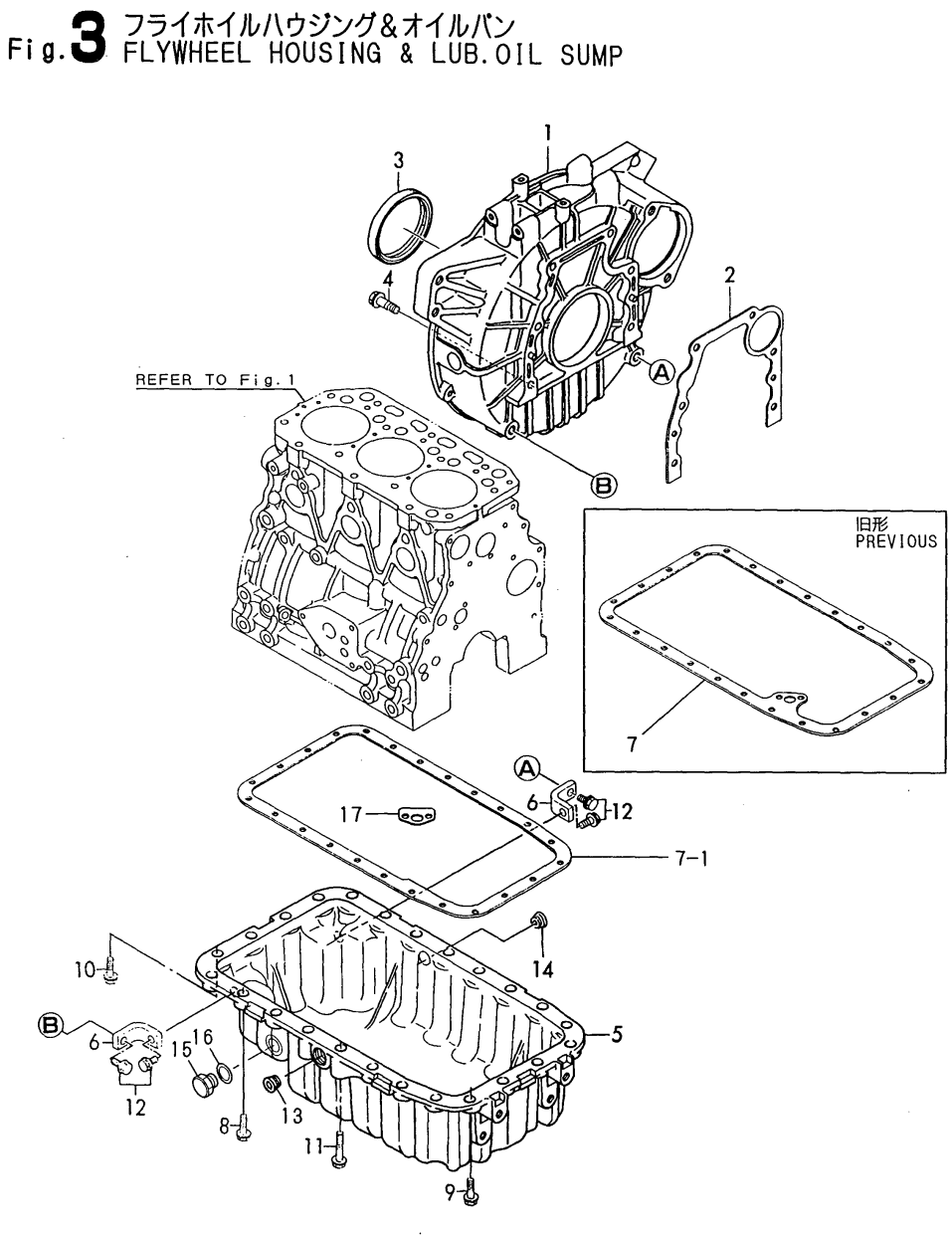

Remarks
(1)INTERCHANGEABLE BY SIMULTANEOUS REPLACEMENT WITH REF.NO.7 IS REF.NO.7-1 & 17.

(A)=3JH2E (D)=
(B)=3JH2BE (E)=
(C)= (F)=

No.	Lev.	Parts No.	Description	Q'ty (A)	(B)	(C)	(D)	(E)	(F)	I	R
1	1	129171-01600	HOUSING, FLYWHEEL	1	1						
2	1	129470-01620	GASKET	1	1						
3	1	129795-01780	SEAL, OIL	1	1						
4	1	26106-100302	BOLT, M10X 30 PLATED	6	6						
5	1	129170-01701	SUMP, OIL	1	1						
6	1	129171-01710	BRACKET	2	2						
7	1	129198-01750	GASKET, OIL SUMP	1	1						
7-1	1	129150-01750	GASKET, OIL SUMP	1	1					F	1
	(A=E/#02777)	(B=E/#02781)									
8	1	26106-080252	BOLT, M8X 25 PLATED	10	10						
9	1	26106-080252	BOLT, M8X 25 PLATED	6	6						
10	1	26106-080252	BOLT, M8X 25 PLATED	4	4						
11	1	26106-080402	BOLT, M8X 40 PLATED	4	4						
12	1	26106-100252	BOLT, M10X 25 PLATED	4	4						
13	1	23871-030000	PLUG, R03	1	1						
14	1	23871-030000	PLUG, R03	1	1						
15	1	23887-160002	PLUG, 16	1	1					W	
	(A=FROM 1ST)	(B=FROM 1ST)									
16	1	23414-160021	GASKET, 16X1.0	1	1					W	
	(A=FROM 1ST)	(B=FROM 1ST)									
17	1	129470-35040	GASKET	1	1					W	
	(A=E/#02777)	(B=E/#02781)									

N:Old $\frac{\text{Yes}}{\text{No}}$ New, Q:Old $\frac{\text{No}}{\text{Yes}}$ New, R:Old $\frac{\text{Yes}}{\text{Yes}}$ New, S:Old $\frac{\text{No}}{\text{No}}$ New, W:Add, Z:Discontinued, F:Interchangeable by set, K:Q'ty Change

Copyright (C) YANMAR CO., LTD. All RightsReserved.

Fig.4. LABEL

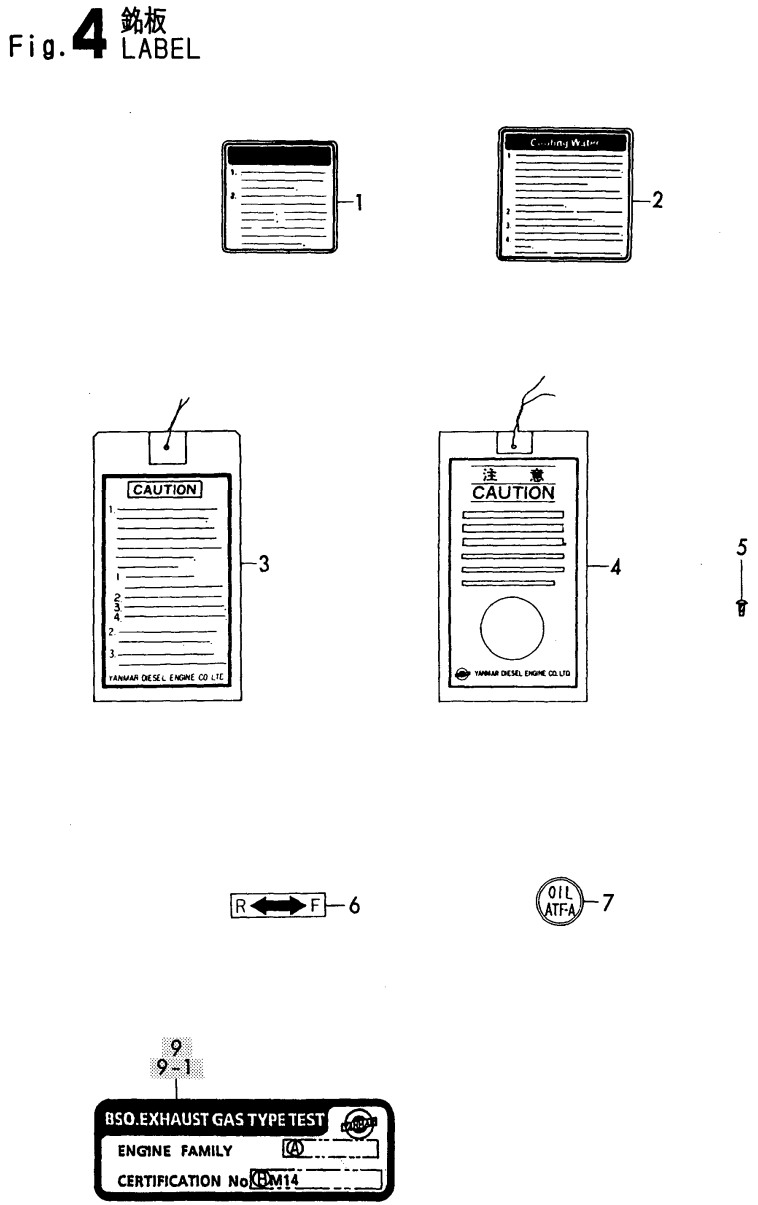

(A)=3JH2E (D)=
(B)=3JH2BE (E)=
(C)= (F)=

No.	Lev.	Parts No.	Description	Q'ty (A)	(B)	(C)	(D)	(E)	(F)	I	R
1	1	135665-07210	LABEL, WATER PUMP	1	1						
2	1	129198-07350	LABEL	1	1						
3	1	126630-07370	LABEL	1	1						
4	1	123682-07850	LABEL, CAUTION	1	1						
5	1	102210-07990	RIVET	4	4						
6	1	177088-02430	LABEL	1	1						
7	1	177075-02550	LABEL	1							
9	1	129170-07500	LABEL, BSO	1	1					W	
	(A=E00613)	(B=E00611)									
9-1	1	129170-07501	LABEL	1	1					S	
	(A=E01658)	(B=E01659)									

N:Old $\overset{\text{Yes}}{\underset{\text{No}}{\leftrightarrow}}$ New, Q:Old $\overset{\text{No}}{\underset{\text{Yes}}{\leftrightarrow}}$ New, R:Old $\overset{\text{Yes}}{\underset{\text{Yes}}{\leftrightarrow}}$ New, S:Old $\overset{\text{No}}{\underset{\text{No}}{\leftrightarrow}}$ New, W:Add, Z:Discontinued, F:Interchangeable by set, K:Q'ty Change

Copyright (C) YANMAR CO., LTD. All RightsReserved.

Fig.5. ENGINE BRACKET

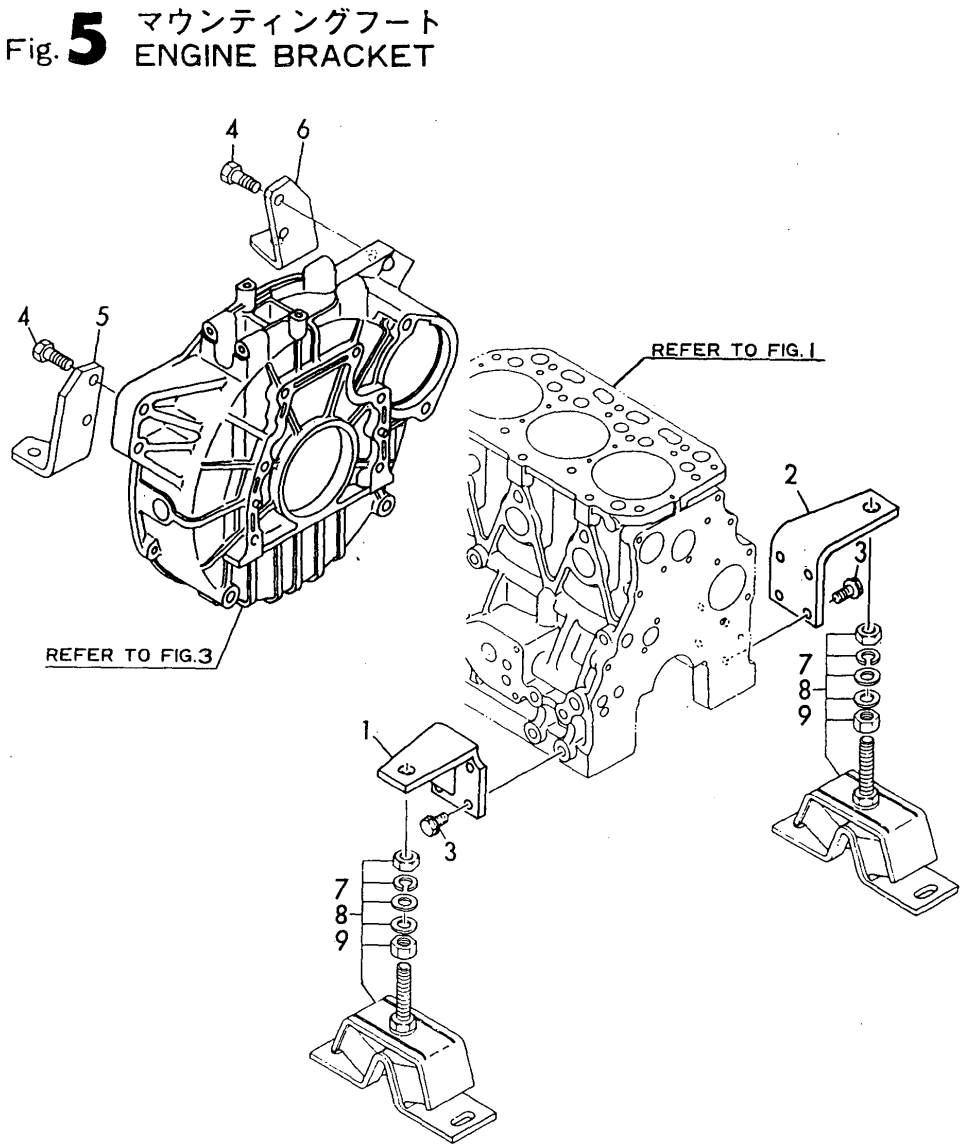

(A)=3JH2E
(B)=3JH2BE
(C)=
(D)=
(E)=
(F)=

No.	Lev.	Parts No.	Description	Q'ty (A)	(B)	(C)	(D)	(E)	(F)	I	R
1	1	129171-08100	FOOT	1	1						
2	1	129171-08110	FOOT	1	1						
3	1	26106-100202	BOLT, M10X 20 PLATED	8	8						
4	1	26116-120302	BOLT, M12X 30 PLATED	4	4						
5	1	129470-08110	FOOT	1	1						
6	1	129470-08120	FOOT	1	1						
7	1	124772-08341	MOUNT, FLEXIBLE 100	2	2						
8	1	121370-08351	MOUNT, FLEXIBLE 150	2	2						
9	1	129470-08350	MOUNT, FLEXIBLE 200	2	2						

N:Old $\frac{\text{Yes}}{\text{No}}$ New, Q:Old $\frac{\text{No}}{\text{Yes}}$ New, R:Old $\frac{\text{Yes}}{\text{Yes}}$ New, S:Old $\frac{\text{No}}{\text{No}}$ New, W:Add, Z:Discontinued, F:Interchangeable by set, K:Q'ty Change

Copyright (C) YANMAR CO., LTD. All RightsReserved.

Fig.6. CYLINDER HEAD

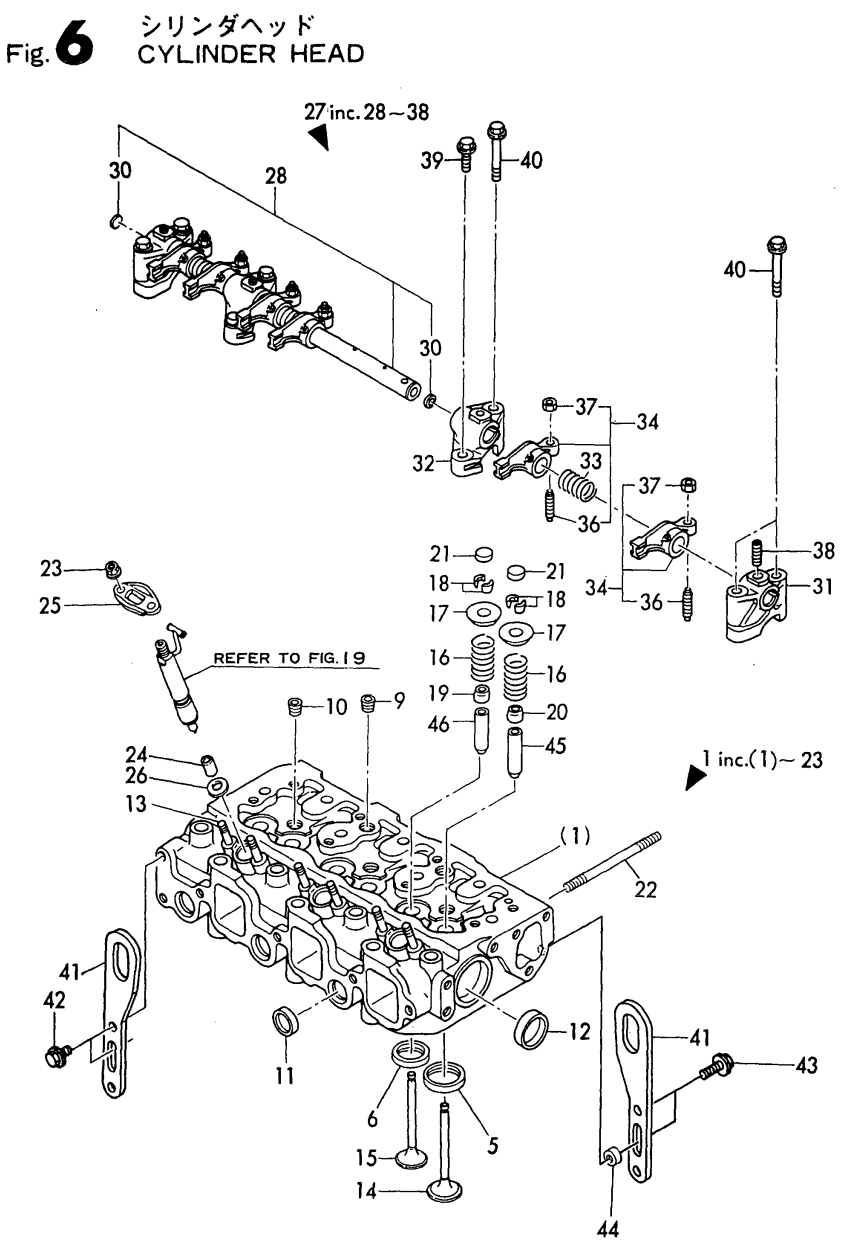

(A)=3JH2E
(B)=3JH2BE
(C)=
(D)=
(E)=
(F)=

No.	Lev.	Parts No.	Description	Q'ty (A)	(B)	(C)	(D)	(E)	(F)	I	R
1	1	729198-11700	HEAD ASSY, CYLINDER	1	1						
5	3	129470-11850	SEAT, EXHAUST VALVE	3	3						
6	3	129470-11090	SEAT, EXHAUST VALVE	3	3						
9	3	121850-11860	PLUG, PT1/4	2	2						
10	3	23871-030000	PLUG, R03	3	3						
11	3	27241-220000	PLUG, 22	3	3						
12	3	27241-400000	PLUG, 40	2	2						
13	3	26216-060202	STUD, M6X 20	6	6						
14	2	129100-11100	VALVE, INTAKE	3	3						
15	2	129100-11110	VALVE, EXHAUST	3	3						
16	2	129795-11120	SPRING, VALVE	6	6						
17	2	129795-11180	RETAINER, SPRING	6	6						
18	2	103338-11190	COTTER	12	12						
19	2	121400-11340	SEAL, VALVE STEM	3	3						
20	2	124460-11340	SEAL, VALVE STEM	3	3						
21	2	104511-11370	CAP, VALVE	6	6						
22	2	26216-081002	STUD, M8X100	2	2						
23	2	26367-060002	NUT, M6	6	6						
24	1	119625-11870	PROTECTOR, NOZZLE	3	3						
25	1	119625-11900	RETAINER, NOZZLE	3	3						
26	1	119625-11880	SEAT, NOZZLE	3	3						
27	1	129155-11241	SHAFT ASSY, ROCKER	1	1						
28	2	129150-11290	SHAFT, ROCKER ARM	1	1						
30	3	27241-100000	PLUG, 10	2	2						
31	2	129155-11260	SUPPORT, ROCKER ARM	2	2						
32	2	129155-11270	SUPPORT, ROCKER ARM	2	2						
33	2	129150-11280	SPRING	3	3						
34	2	729402-11650	ARM ASSY, ROCKER	6	6						
36	3	129150-11230	SCREW, VALVE ADJUST	6	6						
37	3	129150-11750	NUT, M8	6	6						
38	2	26226-080182	STUD, M8X 18	3	3						
39	1	26106-080252	BOLT, M8X 25 PLATED	2	2						
40	1	26106-080502	BOLT, M8X 50 PLATED	6	6						
41	1	129171-07900	LIFTER	2	2						
42	1	26106-080142	BOLT, M8X 14 PLATED	2	2						
43	1	26106-080222	BOLT, M8X 22 PLATED	2	2						
44	1	127610-03150	SPACER	2	2						
45	1	120130-11860	GUIDE, VALVE	3	3						1
46	1	129150-11810	GUIDE, VALVE	3	3						1

Remarks
(1) REPAIR PART.

N:Old $\overset{\text{Yes}}{\underset{\text{No}}{\leftrightarrows}}$ New, Q:Old $\overset{\text{No}}{\underset{\text{Yes}}{\leftrightarrows}}$ New, R:Old $\overset{\text{Yes}}{\underset{\text{Yes}}{\leftrightarrows}}$ New, S:Old $\overset{\text{No}}{\underset{\text{No}}{\leftrightarrows}}$ New, W:Add, Z:Discontinued, F:Interchangeable by set, K:Q'ty Change

Copyright (C) YANMAR CO., LTD. All RightsReserved.

Fig.7. BONNET

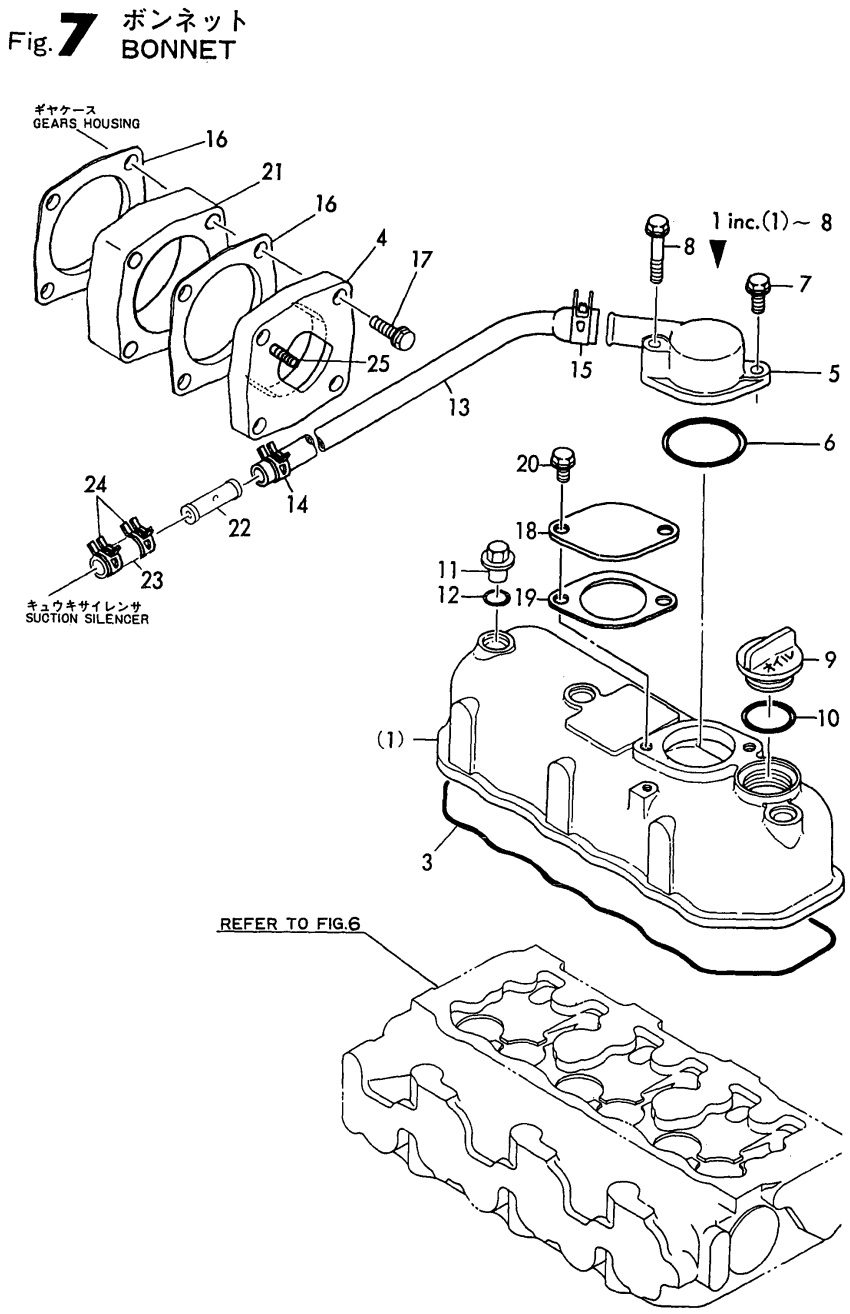

(A)=3JH2E (D)=
(B)=3JH2BE (E)=
(C)= (F)=

No.	Lev.	Parts No.	Description	Q'ty (A)	(B)	(C)	(D)	(E)	(F)	I	R
1	1	729171-11520	BONNET ASSY, HEAD	1	1						
3	2	129150-11310	GASKET, BONNET	1	1						
4	2	129170-03030	BRACKET	1	1						
5	2	129470-03010	COVER, BREATHER	1	1						
6	2	24341-000500	O-RING, 1AS50.0	1	1						
7	2	26106-080202	BOLT, M8X 20 PLATED	1	1						
8	2	26106-080402	BOLT, M8X 40 PLATED	1	1						
9	1	124160-01751	COVER, FILLER	1	1						
10	1	24311-000320	O-RING, 1AP32.0	1	1						
11	1	124160-11360	KNOB	3	3						
12	1	24311-000120	O-RING, 1AP12.0	3	3						
13	1	129171-03090	PIPE , BREATHER	1	1						
14	1	129301-03660	CLAMP 16	1	1						
15	1	129410-03990	CLIP	1	1						
16	1	129150-01881	GASKET	2	2						
16-1	1	129C26-01890	GASKET, HO-P	2	2					R	
	(A=EXXXXX)	(B=EXXXXX)									
17	1	26106-080162	BOLT, M8X 16 PLATED	3	3						
18	1	129171-11320	COVER, BONNET	1	1						
19	1	129171-11330	GASKET	1	1						
20	1	26106-080142	BOLT, M8X 14 PLATED	2	2						
21	1	129170-03040	SPACER	1	1						
22	1	129170-03120	JOINT	1	1						
23	1	129170-03130	JOINT, BREATHER	1	1						
24	1	129301-03660	CLAMP 16	2	2						
25	1	26216-080222	STUD, M8X 22	1	1						

N:Old ←Yes/No→ New, Q:Old ←No/Yes→ New, R:Old ←Yes/Yes→ New, S:Old ←No/No→ New, W:Add, Z:Discontinued, F:Interchangeable by set, K:Q'ty Change

Copyright (C) YANMAR CO., LTD. All RightsReserved.

Fig.8. SUCTION MANIFOLD

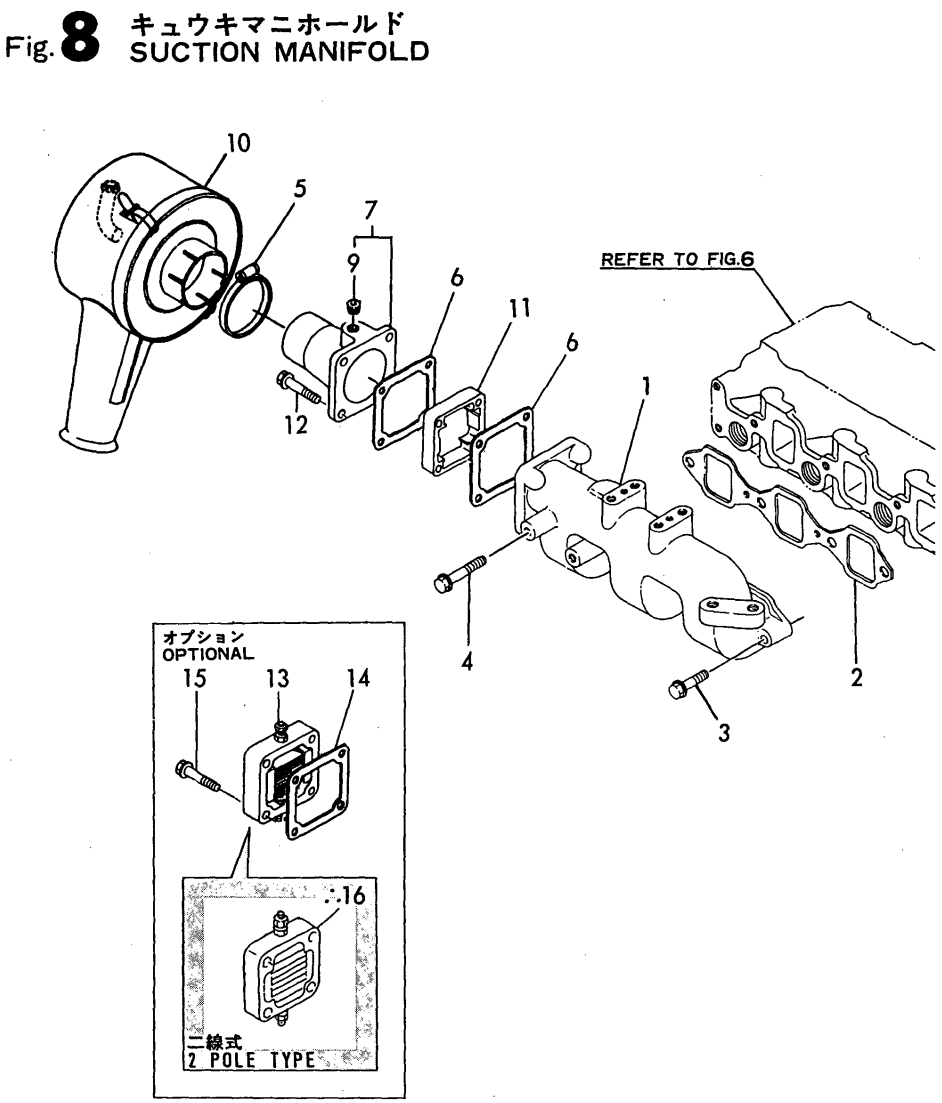

Remarks
(1) OPTIONAL
(2) OPTIONAL:2 POLE TYPE

(A)=3JH2E (D)=
(B)=3JH2BE (E)=
(C)= (F)=

No.	Lev.	Parts No.	Description	Q'ty (A)	(B)	(C)	(D)	(E)	(F)	I	R
1	1	129170-12100	MANIFOLD, AIR INTAKE	1	1						
2	1	129150-12111	GASKET, MANIFOLD	1	1						
3	1	26106-080252	BOLT, M8X 25 PLATED	3	3						
4	1	26106-080352	BOLT, M8X 35 PLATED	1	1						
5	1	23000-054000	CLAMP, 54	1	1						
6	1	129470-77590	GASKET	2	2						
7	1	129470-12210	JOINT ASSY	1	1						
9	2	23871-010000	PLUG, R01	1	1						
10	1	129570-12300	SILENCER ASSY	1	1						
11	1	129170-12580	SPACER	1	1						
12	1	26106-080402	BOLT, M8X 40 PLATED	4	4						
13	1	129100-77500	HEATER, AIR 12V	1	1						1
14	1	129100-77510	GASKET	1	1						1
15	1	26106-080402	BOLT, M8X 40 PLATED	4	4						1
16	1	129400-77501	HEATER	1	1					W	2
	(A=E01012)		(B=E01011)								

N:Old $\frac{\text{Yes}}{\text{No}}$ New, Q:Old $\frac{\text{No}}{\text{Yes}}$ New, R:Old $\frac{\text{Yes}}{\text{Yes}}$ New, S:Old $\frac{\text{No}}{\text{No}}$ New, W:Add, Z:Discontinued, F:Interchangeable by set, K:Q'ty Change

Copyright (C) YANMAR CO., LTD. All RightsReserved.

Fig.9. CAMSHAFT & DRIVING GEAR

Fig. 9 カムシャフト＆クドウギヤ CAMSHAFT & DRIVING GEAR

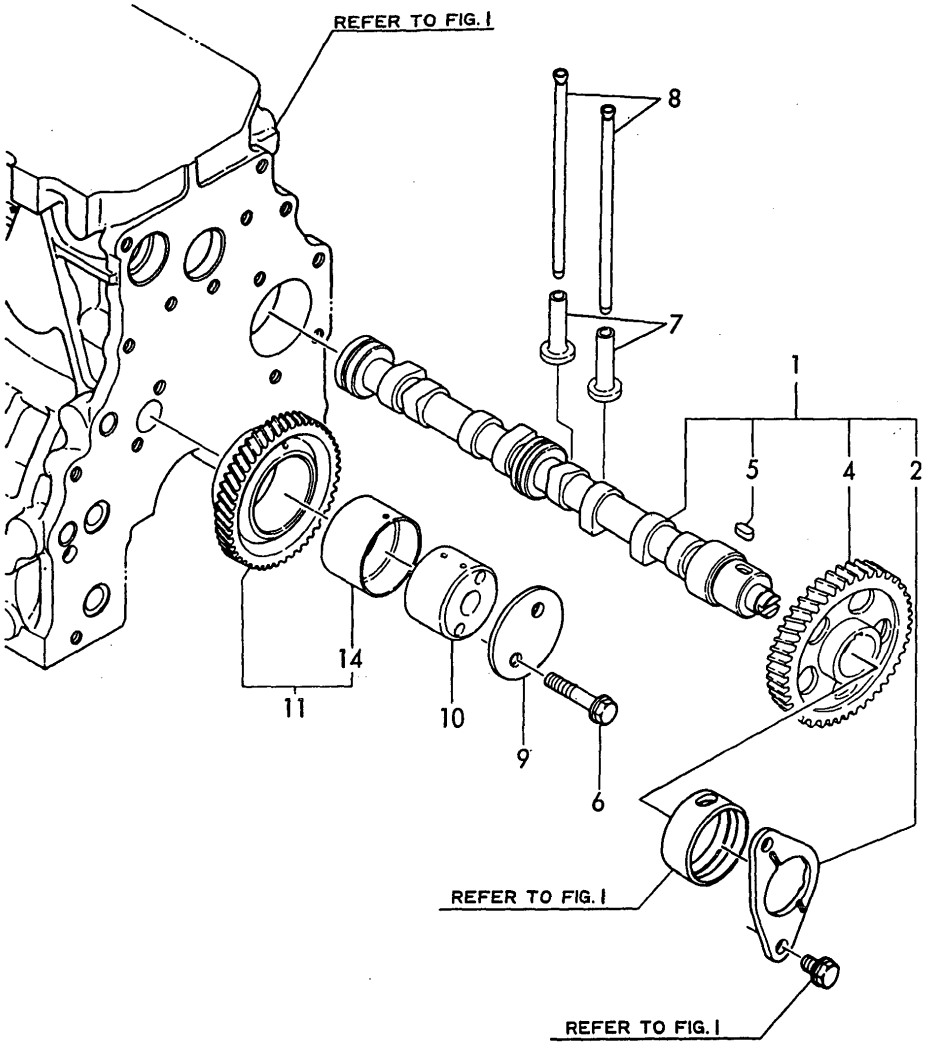

(A)=3JH2E
(B)=3JH2BE
(C)=
(D)=
(E)=
(F)=

No.	Lev.	Parts No.	Description	Q'ty (A)	(B)	(C)	(D)	(E)	(F)	I	R
1	1	129129-14580	CAMSHAFT ASSY	1	1						
2	2	129150-02450	BEARING, THRUST	1	1						
4	2	129150-14101	GEAR, CAMSHAFT	1	1						
5	2	22512-070140	KEY, 7X 14	1	1						
6	1	26106-080452	BOLT, M8X 45 PLATED	2	2						
7	1	129150-14200	TAPPET	6	6						
8	1	119171-14400	ROD, PUSH L=178	6	6						
9	1	129150-25020	RETAINER	1	1						
10	1	129150-25052	SHAFT, IDLE	1	1						
11	1	129573-25100	GEAR ASSY, IDLE	1	1						
14	1	129573-25090	BUSH, IDLE GEAR	1	1						1

Remarks
(1) REPAIR PART.

N:Old $\xleftarrow[\text{No}]{\text{Yes}}$ New, Q:Old $\xleftarrow[\text{Yes}]{\text{No}}$ New, R:Old $\xleftrightarrow[\text{Yes}]{\text{Yes}}$ New, S:Old $\xleftrightarrow[\text{No}]{\text{No}}$ New, W:Add, Z:Discontinued, F:Interchangeable by set, K:Q'ty Change

Copyright (C) YANMAR CO., LTD. All RightsReserved.

Fig.10. CRANKSHAFT & PISTON

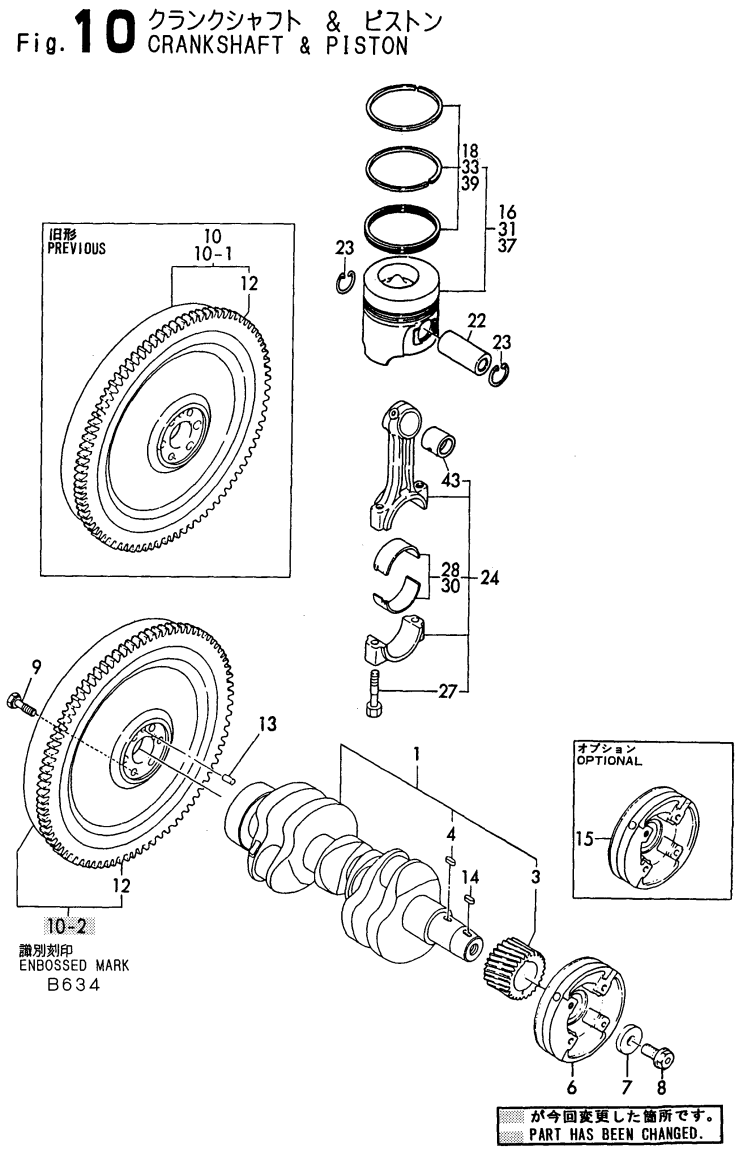

Remarks
(1)UNDER SIZE(U.S=0.25)PART.
(2)OVER SIZE(O.S=0.25)PART.
(3)OPTIONAL.
(4)OVER SIZE(O.S=0.5)PART.
(5)REPAIR PART.

(A)=3JH2E (D)=
(B)=3JH2BE (E)=
(C)= (F)=

No.	Lev.	Parts No.	Description	Q'ty (A)	(B)	(C)	(D)	(E)	(F)	I	R
1	1	129170-21001	CRANKSHAFT ASSY	1	1						
3	2	129150-21200	GEAR, CRANKSHAFT	1	1						
4	2	22512-070140	KEY, 7X 14	1	1						
6	1	129171-21650	V-PULLEY, FC25	1	1						
7	1	129795-21661	WASHER	1	1						
8	1	121850-21680	BOLT	1	1						
9	1	121111-21501	BOLT, FLYWHEEL	6	6						
10	1	129171-21590	FLYWHEEL ASSY	1	1						
10-1	1	129170-21580	FLYWHEEL ASSY	1	1					N	
	(A=E00535)	(B=E00526)									
10-2	1	129170-21581	FLYWHEEL ASSY	1	1					S	
	(A=E01658)	(B=E01659)									
12	2	104211-21600	GEAR, RING	1	1						
13	1	22312-080160	PIN, PARALLEL M8X16	1	1						
14	1	22512-070160	KEY, 7X 16	1	1						
15	1	129170-21650	V-PULLEY, S45C	1	1						3
16	1	129402-22090	PISTON ASSY	3	3						
18	2	729120-22500	RING SET, PISTON	3	3						
22	1	129150-22300	PIN, PISTON D26 L66	3	3						
23	1	121100-22400	CIRCLIP	6	6						
24	1	729402-23100	ROD ASSY, CONNECTING	3	3						
27	2	121550-23200	BOLT, CONNECTING ROD	6	6						
28	2	129150-23600	BEARING, CRANK PIN	3	3						
30	1	129150-23610	BEARING, 0.25 US	3	3						1
31	1	729402-22910	PISTON ASSY, 0.25 OS	3	3						2
33	2	729120-22950	RING SET, 0.25 OS	3	3						2
37	1	129402-22920	PISTON ASSY, 0.50 OS	3	3						4
39	2	129402-22970	RING SET, 0.50 OS	3	3						4
43	1	129100-23910	BEARING, PISTON PIN	3	3						5

N:Old $\frac{\text{Yes}}{\text{No}}$ New, Q:Old $\frac{\text{No}}{\text{Yes}}$ New, R:Old $\frac{\text{Yes}}{\text{Yes}}$ New, S:Old $\frac{\text{No}}{\text{No}}$ New, W:Add, Z:Discontinued, F:Interchangeable by set, K:Q'ty Change

Copyright (C) YANMAR CO., LTD. All RightsReserved.

Fig.11. LUB. OIL SYSTEM

Fig. 11 潤滑油システム LUB. OIL SYSTEM

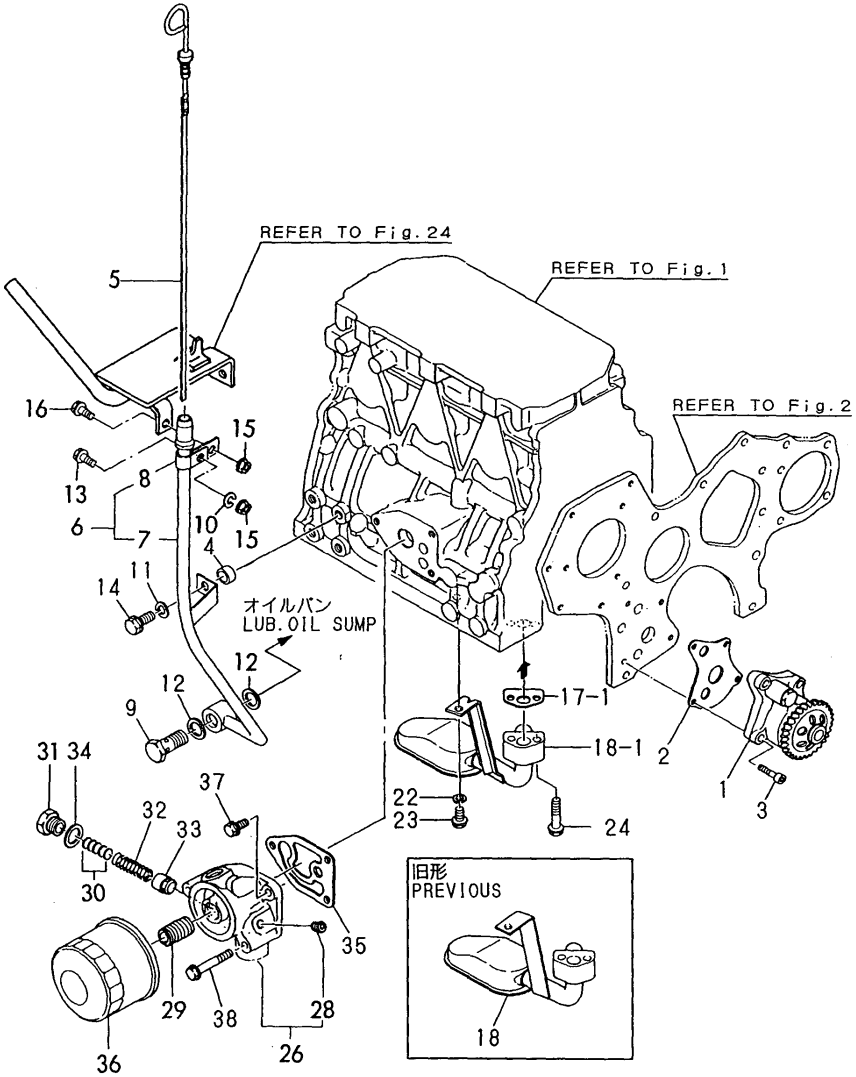

見出しNo．25は、見出しNo．26から34を含みます。
25 inc．26 ～ 34

(A)=3JH2E (D)=
(B)=3JH2BE (E)=
(C)= (F)=

No.	Lev.	Parts No.	Description	Q'ty (A)	(B)	(C)	(D)	(E)	(F)	I	R
1	1	129470-32000	PUMP ASSY, OIL	1	1						
2	1	129150-32020	GASKET, PUMP	1	1						
3	1	26450-060252	BOLT, M6X 25	4	4						
4	1	129301-34830	SPACER	1	1						
5	1	129473-34850	DIPSTICK, OIL	1	1						
6	1	129171-34880	GUIDE ASSY, DIPSTICK	1	1						
7	2	129171-34860	GUIDE, DIPSTICK	1	1						
8	2	129590-34870	RETAINER	1	1						
9	1	104214-39720	BOLT	1	1						
10	1	22217-080000	WASHER, SPRING 8	1	1						
11	1	22217-100000	WASHER, SPRING 10	1	1						
12	1	23414-160000	GASKET, 16X1.0	2	2						
13	1	26106-080162	BOLT, M8X 16 PLATED	1	1						
14	1	26106-100252	BOLT, M10X 25 PLATED	1	1						
15	1	26366-080002	NUT, M8	2	2						
16	1	26106-080122	BOLT, M8X 12 PLATED	1	1						
17	1	129470-35040	GASKET	1	1						
18	1	129473-35090	PIPE ASSY, OIL INLET	1	1						
18-1	1	129473-35091	PIPE ASSY, OIL INLET	1	1					N	
	(A=E/#02777)	(B=E/#02781)									
22	1	22217-080000	WASHER, SPRING 8	1	1						
23	1	26106-080142	BOLT, M8X 14 PLATED	1	1						
24	1	26106-080352	BOLT, M8X 35 PLATED	2	2						
25	1	129470-35101	BRACKET ASSY, FILTER	1	1						
26	2	129470-35131	BRACKET ASSY	1	1						
28	3	23871-020000	PLUG, R02	1	1						
29	2	129100-35140	STUD	1	1						
30	2	121850-35200	SHIM SET	1	1						
31	2	124223-35510	RETAINER, SPRING	1	1						
32	2	121850-35520	SPRING	1	1						
33	2	121850-35531	VALVE, CONTROL	1	1						
34	2	23414-180000	GASKET, 18X1.0	1	1						
35	1	129470-35121	GASKET	1	1						
36	1	119305-35150	FILTER, OIL	1	1						
37	1	26106-080202	BOLT, M8X 20 PLATED	1	1						
38	1	26106-080552	BOLT, M8X 55 PLATED	2	2						

N:Old ⇄(Yes/No) New, Q:Old ⇄(No/Yes) New, R:Old ⇄(Yes/Yes) New, S:Old ⇄(No/No) New, W:Add, Z:Discontinued, F:Interchangeable by set, K:Q'ty Change

Copyright (C) YANMAR CO., LTD. All RightsReserved.

Fig.12. LUB. OIL COOLER

Fig. 12 LOクーラ LUB. OIL COOLER

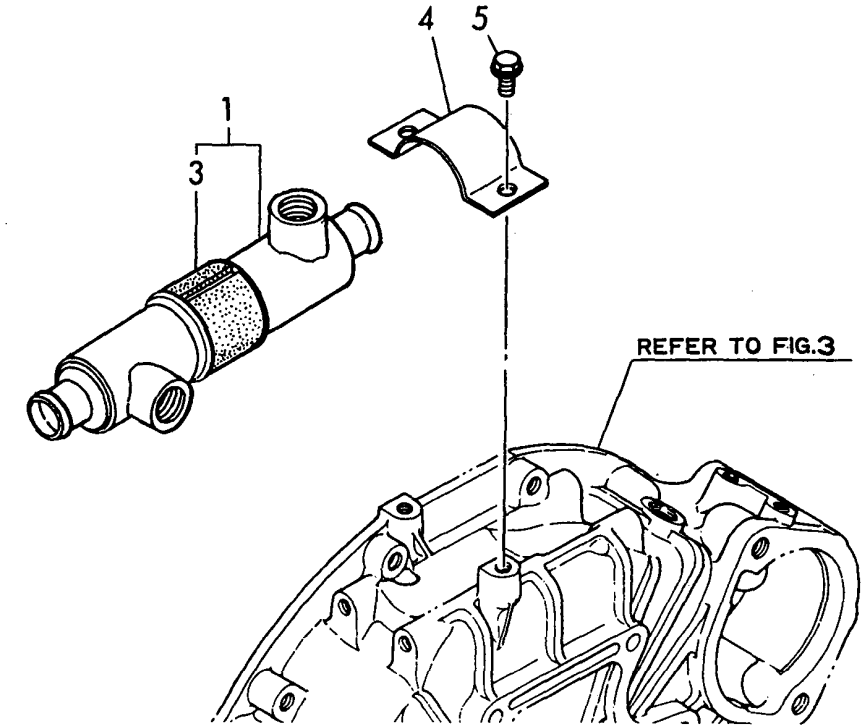

(A)=3JH2E
(B)=3JH2BE
(C)=
(D)=
(E)=
(F)=

No.	Lev.	Parts No.	Description	Q'ty (A)	(B)	(C)	(D)	(E)	(F)	I	R
1	1	129170-33000	COOLER ASSY, OIL	1	1						
3	2	129470-33550	SEAT, RUBBER	1	1						
4	1	129470-33510	RETAINER	1	1						
5	1	26106-080162	BOLT, M8X 16 PLATED	2	2						

N:Old $\xleftrightarrow[\text{No}]{\text{Yes}}$ New, Q:Old $\xleftrightarrow[\text{Yes}]{\text{No}}$ New, R:Old $\xleftrightarrow[\text{Yes}]{\text{Yes}}$ New, S:Old $\xleftrightarrow[\text{No}]{\text{No}}$ New, W:Add, Z:Discontinued, F:Interchangeable by set, K:Q'ty Change

Copyright (C) YANMAR CO., LTD. All RightsReserved.

Fig.13. LUB. OIL PIPE

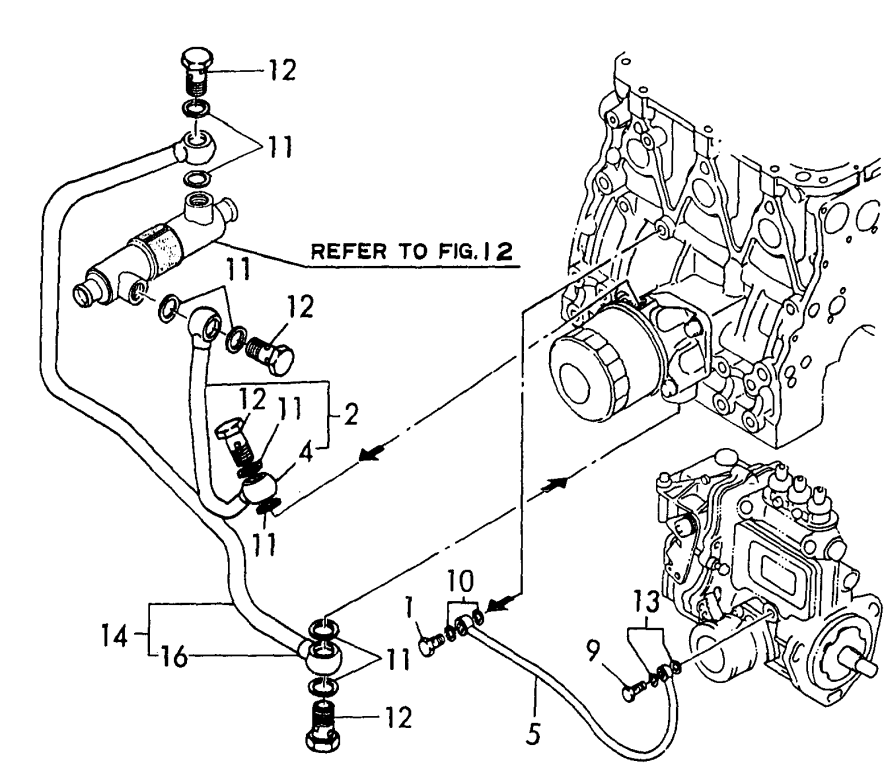

(A)=3JH2E (D)=
(B)=3JH2BE (E)=
(C)= (F)=

No.	Lev.	Parts No.	Description	Q'ty (A)	(B)	(C)	(D)	(E)	(F)	I	R
1	1	124160-39140	BOLT, PIPE JOINT M10	1	1						
2	1	129470-39201	PIPE ASSY, OIL	1	1						
4	2	23341-150000	JOINT, PIPE 15-20	2	2						
5	1	129150-39450	PIPE ASSY, OIL	1	1						
9	1	124550-59820	BOLT, PIPE JOINT M8	1	1						
10	1	23414-100000	GASKET, 10X1.0	2	2						
11	1	23414-200000	GASKET, 20X1.0	8	8						
12	1	23857-150000	BOLT, JOINT 15	4	4						
13	1	23414-080000	GASKET, 8X1.0	2	2						
14	1	129170-39300	PIPE ASSY, OIL	1	1						
16	2	23341-150000	JOINT, PIPE 15-20	2	2						

N:Old $\frac{\text{Yes}}{\text{No}}$ New, Q:Old $\frac{\text{No}}{\text{Yes}}$ New, R:Old $\frac{\text{Yes}}{\text{Yes}}$ New, S:Old $\frac{\text{No}}{\text{No}}$ New, W:Add, Z:Discontinued, F:Interchangeable by set, K:Q'ty Change

Copyright (C) YANMAR CO., LTD. All RightsReserved.

Fig.14. COOLING SEA WATER SYSTEM

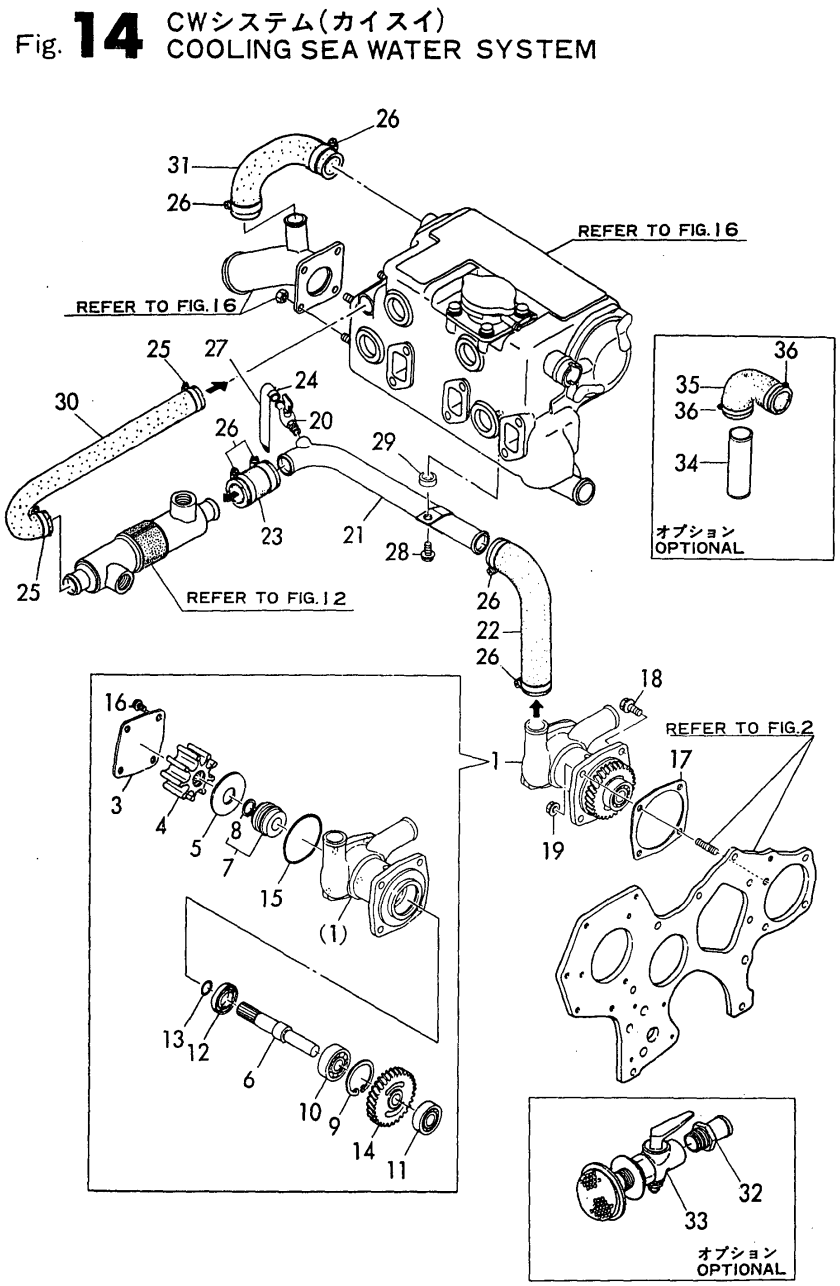

(A)=3JH2E (D)=
(B)=3JH2BE (E)=
(C)= (F)=

No.	Lev.	Parts No.	Description	Q'ty (A)	(B)	(C)	(D)	(E)	(F)	I	R
1	1	129573-42500	PUMP ASSY, WATER	1	1						
3	2	129470-42520	COVER	1	1						
4	2	129470-42530	IMPELLER	1	1						
5	2	129573-42540	PLATE	1	1						
6	2	129470-42550	SHAFT	1	1						
7	2	129795-42670	SEAL	1	1						
8	3	145410-46190	CIRCLIP	1	1						
9	2	22252-000420	RING, 42	1	1						
10	2	24101-063024	BEARING, BALL 6302	1	1						
11	2	24101-062024	BEARING, BALL 6202	1	1						
12	2	24421-203508	SEAL, OIL TC203508	1	1						
13	2	24311-000150	O-RING, 1AP15.0	1	1						
14	2	129470-42700	GEAR	1	1						
15	2	24341-000600	O-RING, 1AS60.0	1	1						
16	2	26203-060102	BOLT, M6X 10 PLATED	4	4						
17	1	129150-01881	GASKET	1	1						
18	1	26106-080162	BOLT, M8X 16 PLATED	3	3						
19	1	26366-080002	NUT, M8	1	1						
20	1	128695-44090	COCK	1	1						
21	1	129170-49010	PIPE, WATER	1	1						
22	1	129470-49040	PIPE, WATER	1	1						
23	1	129470-49110	JOINT, 25X55	1	1						
24	1	124460-77680	RETAINER	1	1						
25	1	23000-035000	CLAMP, 35	2	2						
26	1	23000-035000	CLAMP, 35	6	6						
27	1	23061-070300	PIPE, 7X 300	1	1						
28	1	26106-080252	BOLT, M8X 25 PLATED	1	1						
29	1	127610-03150	SPACER	1	1						
30	1	129170-49240	PIPE, WATER	1	1						
31	1	129170-49050	PIPE, WATER	1	1						
32	1	43530-500570	JOINT	1	1						
33	1	43662-025030	COCK ASSY, SEA WATER	1	1						
34	1	129490-49070	JOINT	1	1						
35	1	129171-49900	JOINT, RUBBER	1	1						
36	1	23000-035000	CLAMP, 35	2	2						

N:Old ←Yes/No→ New, Q:Old ←No/Yes→ New, R:Old ←Yes/Yes→ New, S:Old ←No/No→ New, W:Add, Z:Discontinued, F:Interchangeable by set, K:Q'ty Change

Copyright (C) YANMAR CO., LTD. All RightsReserved.

Fig.15. COOLING FRESH WATER SYSTEM

Fig. 15 CWシステム（セイスイ） COOLING FRESH WATER SYSTEM

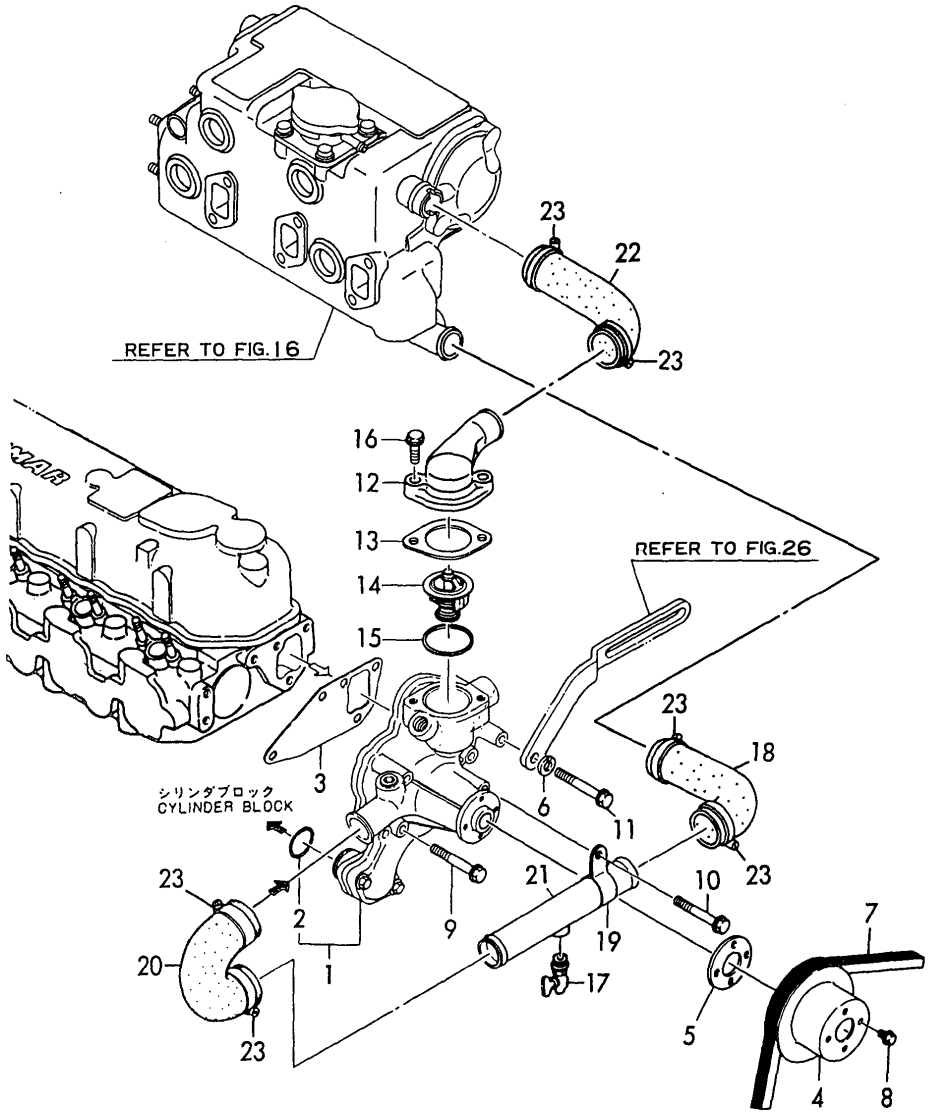

(A)=3JH2E (D)=
(B)=3JH2BE (E)=
(C)= (F)=

No.	Lev.	Parts No.	Description	Q'ty (A)	(B)	(C)	(D)	(E)	(F)	I	R
1	1	129470-42001	PUMP ASSY, WATER	1	1						
2	2	129150-42320	O-RING	1	1						
3	1	129150-42020	GASKET, WATER PUMP	1	1						
4	1	129550-42350	V-PULLEY, D=120	1	1						
5	1	129156-44760	WASHER	1	1						
6	1	22217-080000	WASHER, SPRING 8	1	1						
7	1	171087-42280	V-BELT, A44	1	1						
8	1	26106-060102	BOLT, M6X 10 PLATED	4	4						
9	1	26106-080552	BOLT, M8X 55 PLATED	2	2						
10	1	26106-080552	BOLT, M8X 55 PLATED	1	1						
11	1	26106-080652	BOLT, M8X 65 PLATED	1	1						
12	1	129171-49540	COVER, THERMOSTAT	1	1						
13	1	129470-49550	GASKET	1	1						
14	1	129470-49801	THERMOSTAT, 76.5	1	1						
15	1	129470-49810	GASKET, THERMOSTAT	1	1						
16	1	26106-080252	BOLT, M8X 25 PLATED	2	2						
17	1	128695-44090	COCK	1	1						
18	1	129171-49200	JOINT, RUBBER	1	1						
19	1	129470-49220	RETAINER	1	1						
20	1	129470-49240	JOINT, RUBBER 28	1	1						
21	1	129470-49250	PIPE, WATER	1	1						
22	1	129170-49260	JOINT	1	1						
23	1	23000-041000	CLAMP, 41	6	6						

N:Old $\xleftarrow[\text{No}]{\text{Yes}}$ New, Q:Old $\xleftarrow[\text{Yes}]{\text{No}}$ New, R:Old $\xleftarrow[\text{Yes}]{\text{Yes}}$ New, S:Old $\xleftarrow[\text{No}]{\text{No}}$ New, W:Add, Z:Discontinued, F:Interchangeable by set, K:Q'ty Change

Copyright (C) YANMAR CO., LTD. All RightsReserved.

Fig.16. COOLING FRESH WATER COOLER

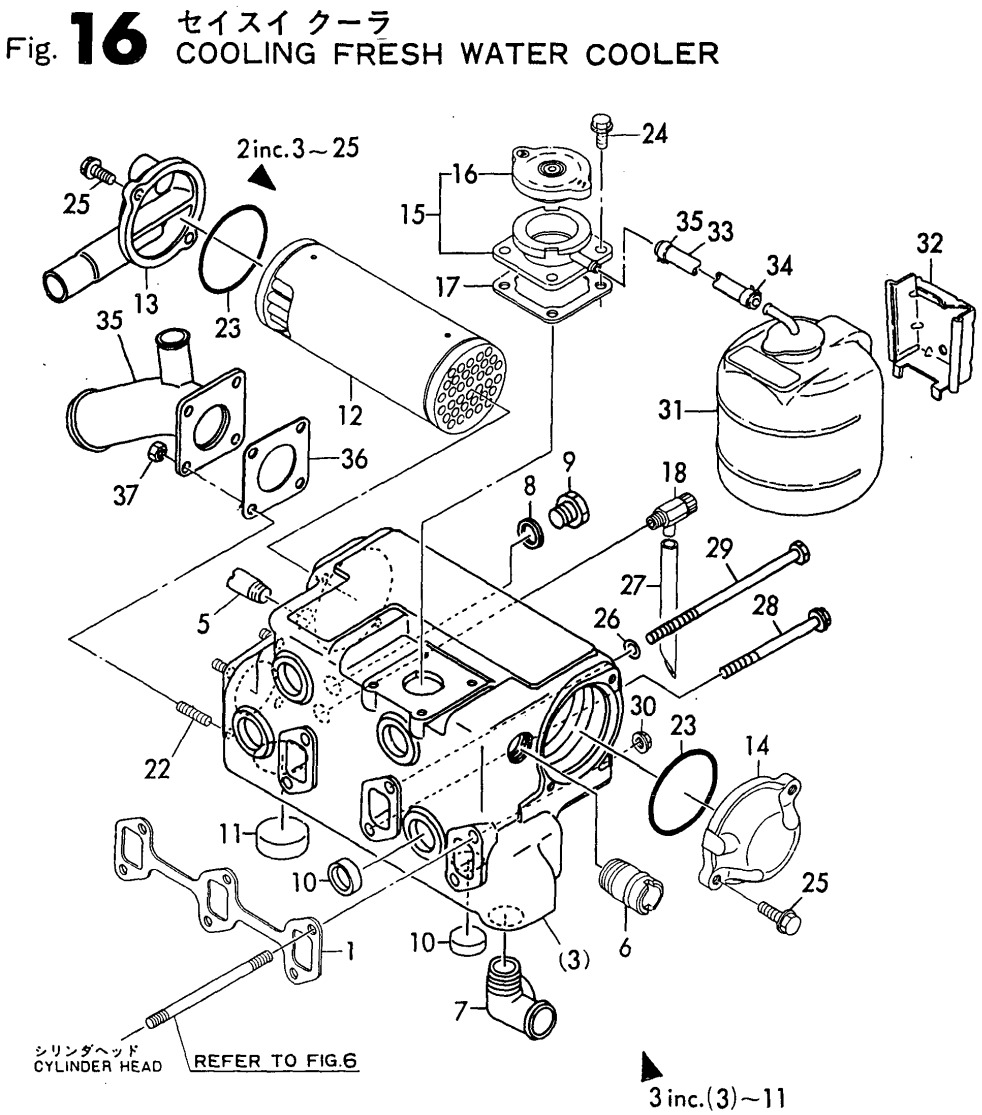

(A)=3JH2E
(B)=3JH2BE
(C)=
(D)=
(E)=
(F)=

No.	Lev.	Parts No.	Description	Q'ty (A)	(B)	(C)	(D)	(E)	(F)	I	R
1	1	129150-13110	GASKET	1	1						
2	1	729171-44500	COOLER ASSY, WATER	1	1						
3	2	129171-44000	COOLER ASSY, WATER	1	1						
5	3	104407-44480	JOINT	1	1						
6	3	124160-49480	JOINT, PIPE	1	1						
7	3	129171-49480	JOINT	1	1						
8	3	23414-170000	GASKET, 17X1.0	1	1						
9	3	23894-030002	PLUG, G3/8	1	1						
10	3	27241-280000	PLUG, 28	5	5						
11	3	27241-400000	PLUG, 40	1	1						
12	2	129171-44110	CORE ASSY, COOLER	1	1						
13	2	129171-44440	COVER, COOLER	1	1						
14	2	129470-44450	COVER, B	1	1						
15	2	129171-44600	FILLER ASSY	1	1						
16	3	129107-44590	CAP, RADIATOR	1	1						
17	2	120445-44640	GASKET	1	1						
18	2	120130-49350	COCK, 1/4	1	1						
22	2	128170-13600	STUD, M8X31	4	4						
23	2	24321-000750	O-RING, 1AG75.0	2	2						
24	2	26106-080162	BOLT, M8X 16 PLATED	4	4						
25	2	26106-080252	BOLT, M8X 25 PLATED	4	4						
26	1	22137-080000	WASHER, 8	3	3						
27	1	23061-120300	PIPE, 12X 300	1	1						
28	1	26106-081002	BOLT, M8X100 PLATED	1	1						
29	1	26116-081602	BOLT, M8X160 PLATED	3	3						
30	1	26366-080002	NUT, M8	2	2						
31	1	120445-44530	TANK, SUB	1	1						
32	1	120445-44540	SUPPORT	1	1						
33	1	124790-44560	PIPE, WATER L=1000	1	1						
34	1	23010-013000	CLAMP 13	2	2						
35	1	129470-13550	ELBOW	1	1						
36	1	129472-18090	GASKET	1	1						
37	1	26703-080002	NUT, M8	4	4						

N:Old ◄Yes/No► New, Q:Old ◄No/Yes► New, R:Old ◄Yes/Yes► New, S:Old ◄No/No► New, W:Add, Z:Discontinued, F:Interchangeable by set, K:Q'ty Change

Copyright (C) YANMAR CO., LTD. All RightsReserved.

Fig.17. FUEL INJECTION PUMP

P/C NEWS No:Y00R4260-5
PUBLISHED:2004/5

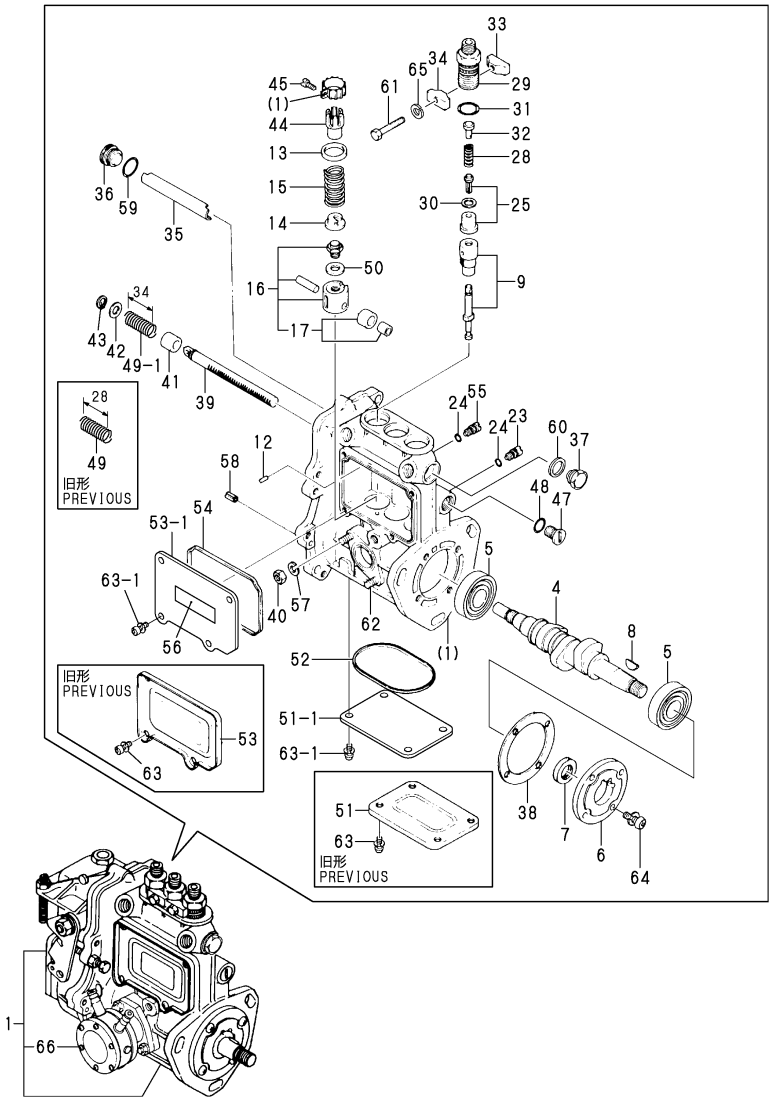

Remarks
(1)FUEL FEED PUMP ASSY(FIG.18) AND GOVERNOR ASSY(FIG.22) IS INCORPORATED IN THIS FOEL INJECTION PUMP ASSY(REF.NO.1)
(2)INTERCHANGEABLE BY SIMULTANEOUS REPLACEMENT WITH REF.NO.63-1.

(A)=3JH2E (D)=
(B)=3JH2BE (E)=
(C)= (F)=

No.	Lev.	Parts No.	Description	Q'ty (A)	(B)	(C)	(D)	(E)	(F)	I	R
1	1	729170-51300	PUMP ASSY, INJECTION	1	1						1
4	3	129171-51040	CAMSHAFT	1	1						
5	3	122710-51050	BEARING, HR30203J	2	2						
6	3	129470-51060	RETAINER, BEARING	1	1						
7	3	129470-51080	SEAL, AF0741F0	1	1						
8	3	122710-51090	KEY	1	1						
9	3	129470-51101	PLUNGER ASSY	3	3						
12	3	129155-51140	PIN	3	3						
13	3	174307-51170	RETAINER, SPRING A	3	3						
14	3	129155-51180	RETAINER, SPRING	3	3						
15	3	124950-51190	SPRING, PLUNGER	3	3						
16	3	129155-51200	TAPPET ASSY	3	3						
17	4	711100-51540	ROLLER ASSY	3	3						
23	3	129155-51270	STOPPER, TAPPET	3	3						
24	3	129155-51280	O-RING, S6	4	4						
25	3	129573-51300	VALVE ASSY, DELIVERY	3	3						
28	3	129573-51330	SPRING, DELIVERY	3	3						
29	3	129573-51340	RETAINER	3	3						
30	3	124550-51350	GASKET, DELIVERY	3	3						
31	3	124550-51370	O-RING	3	3						
32	3	129573-51370	STOPPER, VALVE	3	3						
33	3	129155-51380	STOPPER	2	2						
34	3	129155-51390	STOPPER	2	2						
35	3	129155-51400	DEFLECTOR	1	1						
36	3	129155-51410	BOLT	1	1						
37	3	129155-51420	PLUG, M16	1	1						
38	3	129155-51450	SHIM SET, ADJUSTING	1	1						
39	3	129155-51500	RACK, CONTROL	1	1						
40	3	26716-060002	NUT, M6	2	2						
41	3	129155-51521	BUSH, RACK	1	1						
42	3	129155-51530	SPACER	1	1						
43	3	129155-51540	CIRCLIP	1	1						
44	3	129155-51550	PINION, CONTROL	3	3						
45	3	122117-51560	SCREW	3	3						
45-1	3	129100-51570	SCREW	3	3					N	
	(A=*2001.02)		(B=*2001.02)								
47	3	129155-51570	PLUG, M12	1	1						
48	3	129155-51580	O-RING	1	1						
49	3	129155-51591	SPRING, RACK	1	1						
49-1	3	129190-51590	SPRING, RACK	1	1					N	
	(A=*2003.12)		(B=*2003.12)								
50	3	129155-51600	SHIM SET, ADJUSTING	3	3						
51	3	129155-51700	COVER	1	1						
51-1	3	129155-51701	COVER	1	1					F	2
	(A=*2000.01)		(B=*2000.01)								
52	3	129155-51710	GASKET	1	1						
52-1	3	129155-51711	GASKET	1	1					N	
	(A=*2000.10)		(B=*2000.10)								
53	3	129155-51750	COVER	1	1						
53-1	3	129155-51751	COVER	1	1					F	2
	(A=*2000.01)		(B=*2000.01)								

N:Old $\xleftarrow[\text{No}]{\text{Yes}}$ New, Q:Old $\xleftarrow[\text{Yes}]{\text{No}}$ New, R:Old $\xleftarrow[\text{Yes}]{\text{Yes}}$ New, S:Old $\xleftarrow[\text{No}]{\text{No}}$ New, W:Add, Z:Discontinued, F:Interchangeable by set, K:Q'ty Change

++ CONTINUE ++

Copyright (C) YANMAR CO., LTD. All RightsReserved.

Fig.17. FUEL INJECTION PUMP

P/C NEWS No:Y00R4260-5
PUBLISHED:2004/5

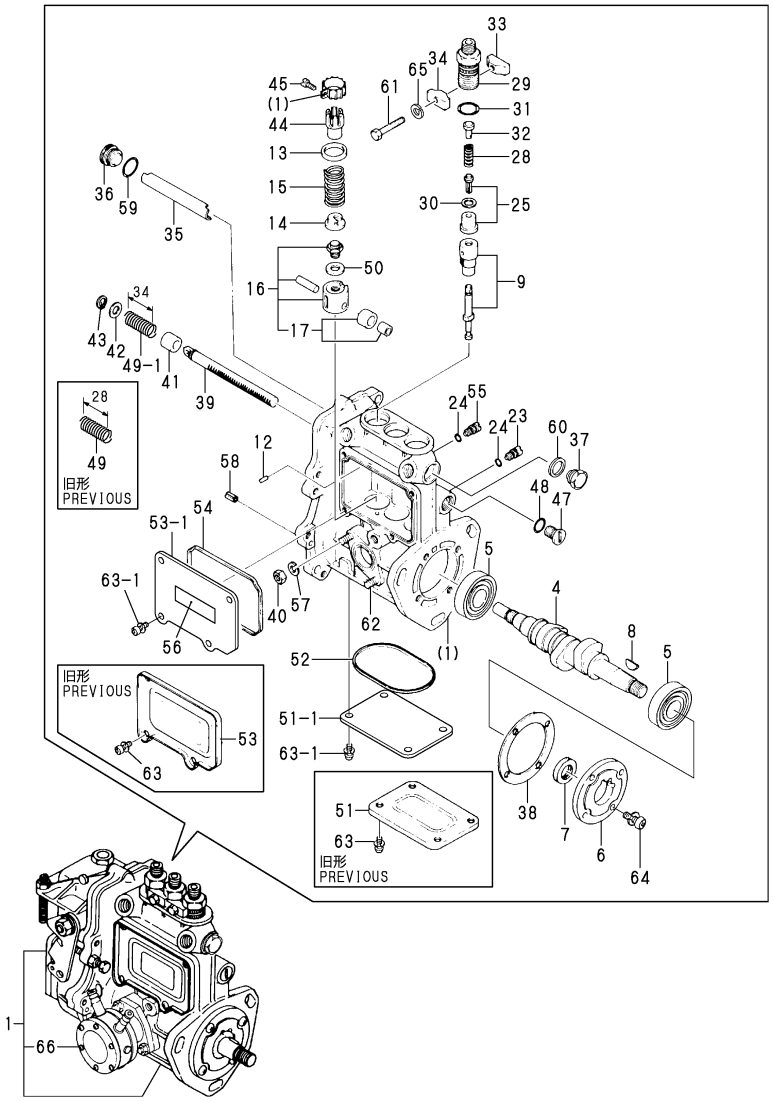

Remarks
(1)FUEL FEED PUMP ASSY(FIG.18) AND GOVERNOR ASSY(FIG.22) IS INCORPORATED IN THIS FOEL INJECTION PUMP ASSY(REF.NO.1)
(2)INTERCHANGEABLE BY SIMULTANEOUS REPLACEMENT WITH REF.NO.63-1.

(A)=3JH2E (D)=
(B)=3JH2BE (E)=
(C)= (F)=

No.	Lev.	Parts No.	Description	Q'ty (A)	(B)	(C)	(D)	(E)	(F)	I	R
54	3	129155-51760	GASKET	1	1						
54-1	3	129155-51761	GASKET	1	1					N	
	(A=*2003.10)	(B=*2003.10)									
55	3	129155-51790	STOOPER, RACK	1	1						
56	3	129156-51910	LABEL, CAUTION	1	1						
57	3	22217-060000	WASHER, SPRING 6	2	2						
58	3	22351-050010	PIN, SPRING 5.0X10	2	2						
59	3	24341-000160	O-RING, 1AS16.0	1	1						
60	3	43400-500490	SEAL WASHER 16S	1	1						
60-1	3	22190-160002	WASHER, SEAL 16	1	1					N	
	(A=*1993.08)	(B=*1993.08)									
61	3	26116-050302	BOLT, M5X 30 PLATED	2	2						
62	3	129155-51020	STUD	2	2						
63	3	26022-050102	SCREW, M5X10	8	8						
63-1	3	26022-050122	SCREW, M5X12	8	8					N	
	(A=*2000.01)	(B=*2000.01)									
64	3	26022-060162	SCREW, M6X16	4	4						
65	3	22217-050000	WASHER, SPRING 5	2	2						
66	2	129158-52000	PUMP ASSY, FUEL FEED	1	1						

N:Old ◄Yes/No► New, Q:Old ◄No/Yes► New, R:Old ◄Yes/Yes► New, S:Old ◄No/No► New, W:Add, Z:Discontinued, F:Interchangeable by set, K:Q'ty Change

Copyright (C) YANMAR CO., LTD. All RightsReserved.

Fig.18. FUEL FEED PUMP

Fig. 18 FOフィードポンプ FUEL FEED PUMP

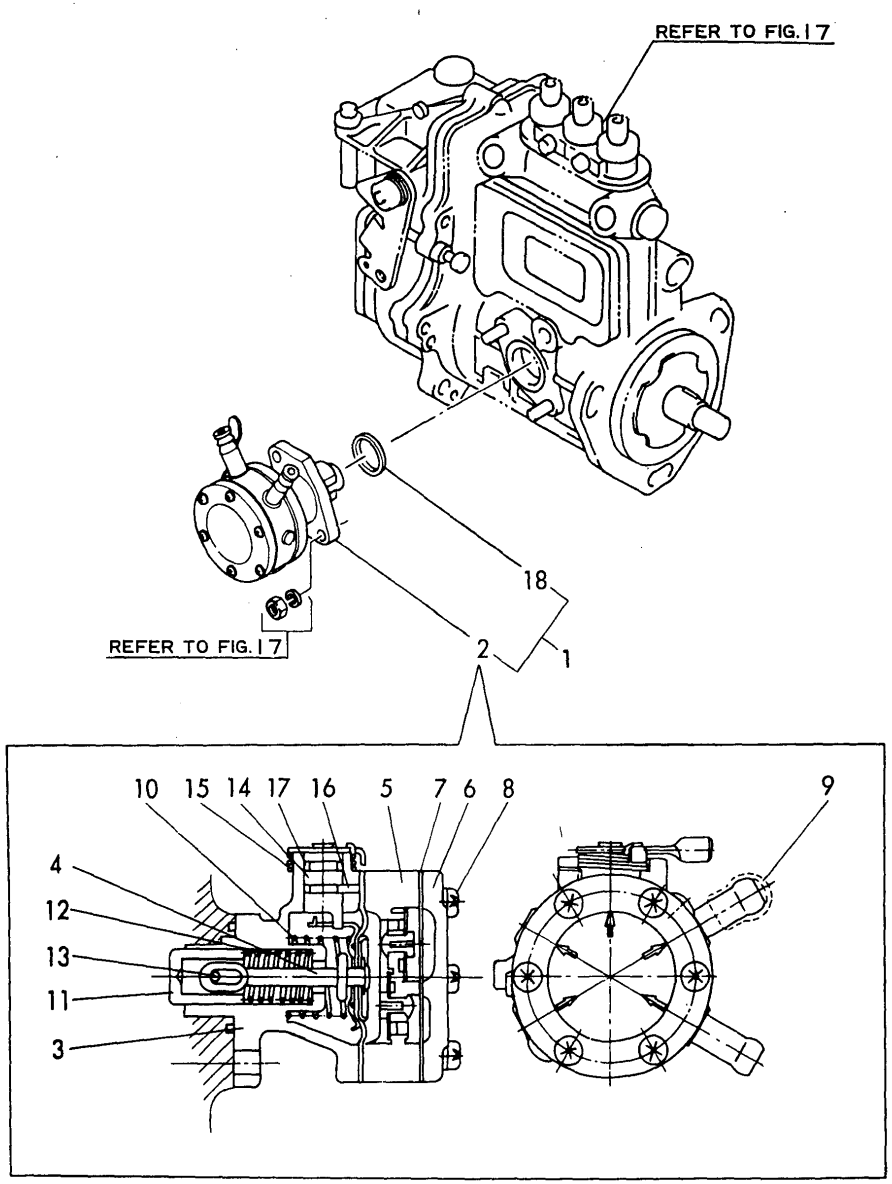

(A)=3JH2E
(B)=3JH2BE
(C)=
(D)=
(E)=
(F)=

No.	Lev.	Parts No.	Description	Q'ty (A)	(B)	(C)	(D)	(E)	(F)	I	R
1	1	129158-52000	PUMP ASSY, FUEL FEED	1	1						
2	2	129158-52100	PUMP ASSY, FUEL FEED	1	1						
3	3	129158-52010	BODY, FEED PUMP	1	1						
4	3	129158-52020	DIAPHRAGM	1	1						
5	3	129158-52050	BODY	1	1						
6	3	129158-52060	COVER	1	1						
7	3	129158-52070	GASKET	1	1						
8	3	129158-52080	SCREW	6	6						
9	3	129158-52090	CAP	2	2						
10	3	129158-52160	SPRING	1	1						
11	3	129158-52250	TAPPET	1	1						
12	3	129158-52260	SPRING	1	1						
13	3	129158-52270	PIN	1	1						
14	3	129158-52350	LEVER	1	1						
15	3	129158-52360	SPRING, RETURN	1	1						
16	3	129158-52370	PIN	1	1						
17	3	129158-52380	O-RING	1	1						
18	2	129155-52050	GASKET	1	1						

N:Old $\xleftarrow[\text{No}]{\text{Yes}}$ New, Q:Old $\xleftarrow[\text{Yes}]{\text{No}}$ New, R:Old $\xleftarrow[\text{Yes}]{\text{Yes}}$ New, S:Old $\xleftarrow[\text{No}]{\text{No}}$ New, W:Add, Z:Discontinued, F:Interchangeable by set, K:Q'ty Change

Copyright (C) YANMAR CO., LTD. All RightsReserved.

Fig.19. FUEL INJECTION PIPE & FUEL INJECTION VALVE

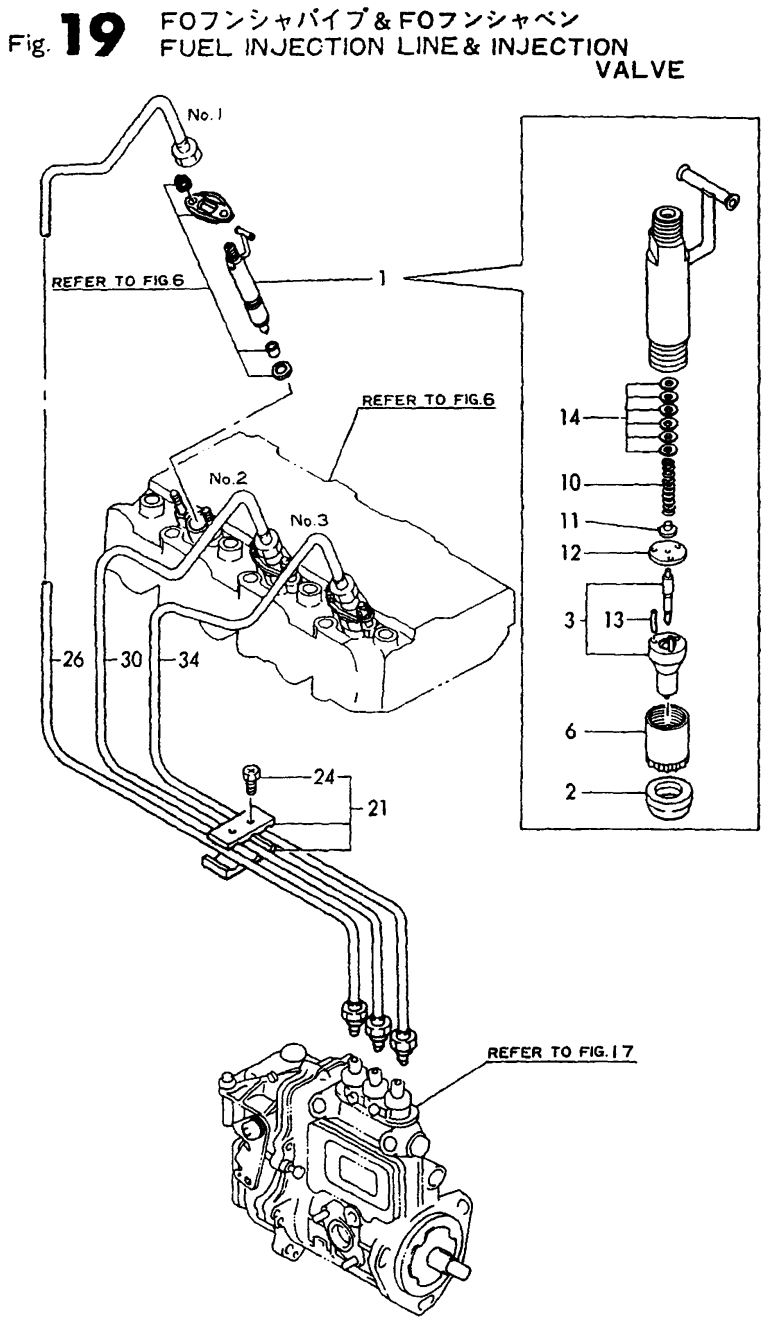

(A)=3JH2E (D)=
(B)=3JH2BE (E)=
(C)= (F)=

No.	Lev.	Parts No.	Description	Q'ty (A)	(B)	(C)	(D)	(E)	(F)	I	R
1	1	729198-53100	VALVE ASSY,INJECTION	3	3						
2	2	129470-11920	GASKET	3	3						
3	2	129100-53000	VALVE ASSY,INJECTION	3	3						
6	2	114250-53080	NUT, NOZZLE D16.95	3	3						
10	2	114250-53120	SPRING, NOZZLE	3	3						
11	2	114250-53130	SEAT, SPRING	3	3						
12	2	114250-53140	PLATE	3	3						
13	2	114250-53210	PIN	6	6						
14	2	114250-53400	SHIM SET	3	3						
21	1	129150-59120	RETAINER, PIPE	1	1						
24	2	129150-59130	BOLT, M4X12	2	2						
26	1	129100-59810	PIPE ASSY, INJECTION	1	1						
30	1	129100-59820	PIPE ASSY, INJECTION	1	1						
34	1	129100-59830	PIPE ASSY, INJECTION	1	1						

N:Old $\frac{\text{Yes}}{\text{No}}$ New, Q:Old $\frac{\text{No}}{\text{Yes}}$ New, R:Old $\frac{\text{Yes}}{\text{Yes}}$ New, S:Old $\frac{\text{No}}{\text{No}}$ New, W:Add, Z:Discontinued, F:Interchangeable by set, K:Q'ty Change

Copyright (C) YANMAR CO., LTD. All RightsReserved.

Fig.20. TIMER

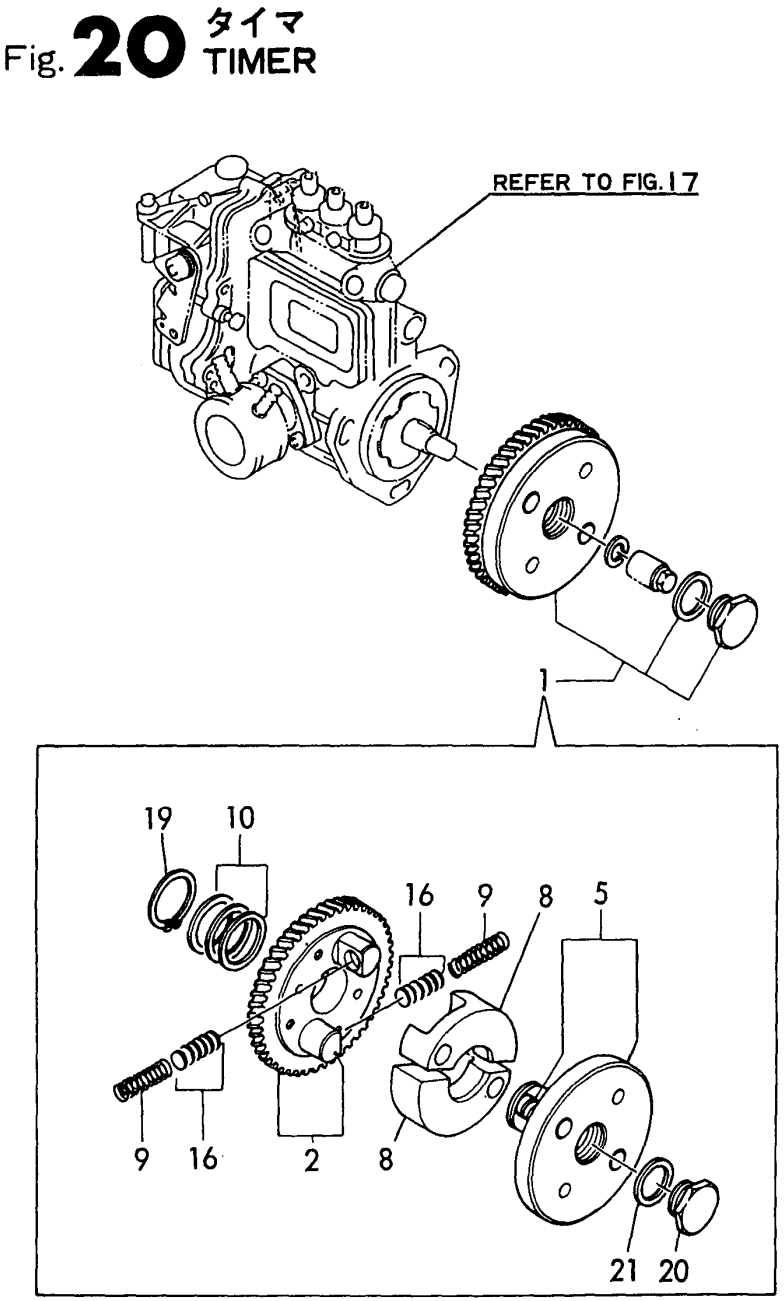

(A)=3JH2E
(B)=3JH2BE
(C)=
(D)=
(E)=
(F)=

No.	Lev.	Parts No.	Description	Q'ty (A)	(B)	(C)	(D)	(E)	(F)	I	R
1	1	729499-54100	TIMER ASSY	1	1						
2	2	129470-54510	GEAR ASSY, TIMER	1	1						
5	2	129499-54550	HUB ASSY, TIMER	1	1						
8	2	129470-54650	WEIGHT, TIMER	2	2						
9	2	124310-54800	SPRING, TIMER	2	2						
10	2	119620-54900	SHIM SET	1	1						
16	2	121850-54900	SHIM SET, SPRING	2	2						
19	2	22242-000320	RING, 32	1	1						
20	2	124410-54940	PLUG	1	1						
21	2	23414-240031	GASKET, 24X1.0	1	1						

N:Old $\frac{\text{Yes}}{\text{No}}$ New, Q:Old $\frac{\text{No}}{\text{Yes}}$ New, R:Old $\frac{\text{Yes}}{\text{Yes}}$ New, S:Old $\frac{\text{No}}{\text{No}}$ New, W:Add, Z:Discontinued, F:Interchangeable by set, K:Q'ty Change

Copyright (C) YANMAR CO., LTD. All RightsReserved.

Fig.21. FUEL PIPE

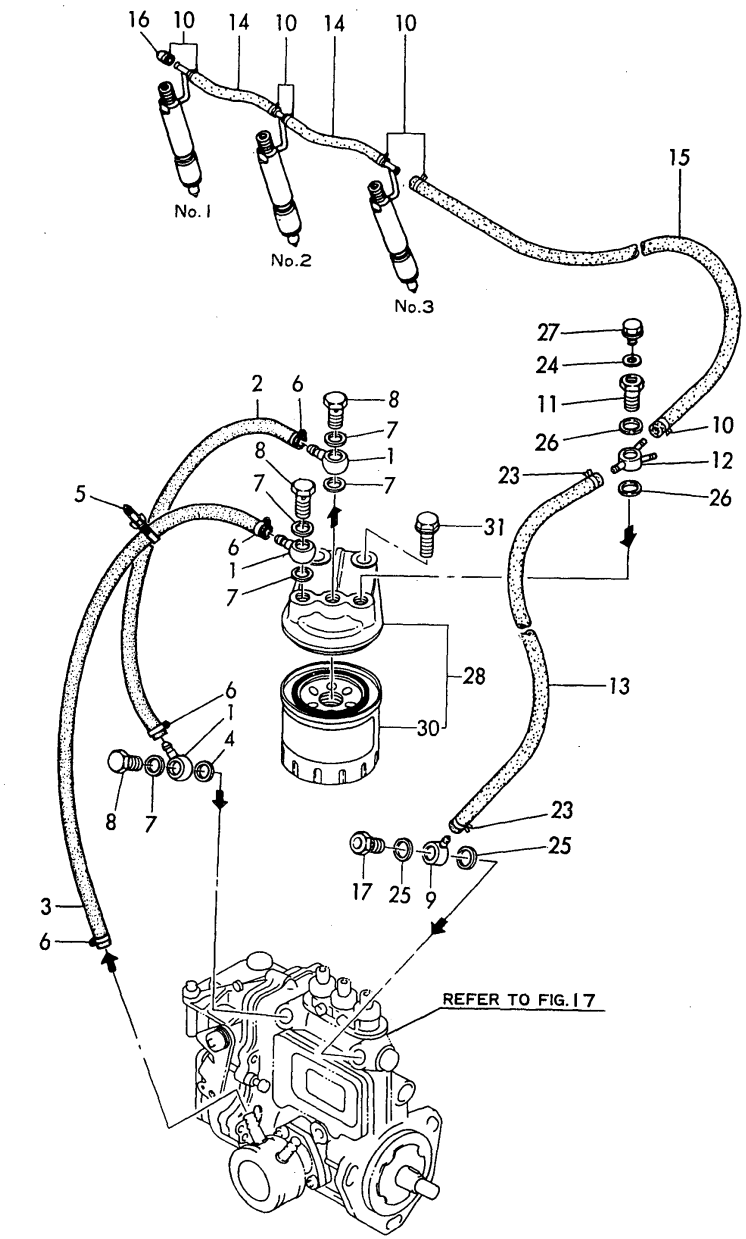

(A)=3JH2E
(B)=3JH2BE
(C)=
(D)=
(E)=
(F)=

No.	Lev.	Parts No.	Description	Q'ty (A)	(B)	(C)	(D)	(E)	(F)	I	R
1	1	101304-59020	JOINT, PIPE 12	3	3						
2	1	129470-59120	PIPE, FUEL	1	1						
3	1	129470-59120	PIPE, FUEL	1	1						
4	1	104200-59170	GASKET, 12	1	1						
5	1	121750-59890	BAND, 140	1	1						
6	1	23080-013000	CLAMP, 13	4	4						
7	1	23414-120000	GASKET, 12X1.0	5	5						
8	1	23857-060000	BOLT, JOINT 6	3	3						
9	1	101304-59020	JOINT, PIPE 12	1	1						
10	1	124066-59100	CLIP, HOSE 8	7	7						
11	1	129495-59300	BOLT, PIPE JOINT	1	1						
12	1	129470-59530	JOINT, PIPE	1	1						
13	1	129470-59540	PIPE, FUEL	1	1						
14	1	119000-59550	PIPE, FUEL RETURN	2	2						
15	1	129470-59560	PIPE, FUEL RETURN	1	1						
16	1	129150-59580	CAP	1	1						
17	1	129100-59951	VALVE ASSY, CHECK	1	1						
23	1	23080-013000	CLAMP, 13	2	2						
24	1	23414-080000	GASKET, 8X1.0	1	1						
25	1	23414-120000	GASKET, 12X1.0	2	2						
26	1	23414-140000	GASKET, 14X1.0	2	2						
27	1	26106-080102	BOLT, M8X 10 PLATED	1	1						
28	1	129470-55601	FILTER ASSY, FUEL	1	1						
30	2	129470-55701	STRAINER ASSY, FUEL	1	1						
31	1	26106-100302	BOLT, M10X 30 PLATED	2	2						

N:Old ◄Yes/No► New, Q:Old ◄No/Yes► New, R:Old ◄Yes/Yes► New, S:Old ◄No/No► New, W:Add, Z:Discontinued, F:Interchangeable by set, K:Q'ty Change

Copyright (C) YANMAR CO., LTD. All RightsReserved.

Fig.22. GOVERNOR

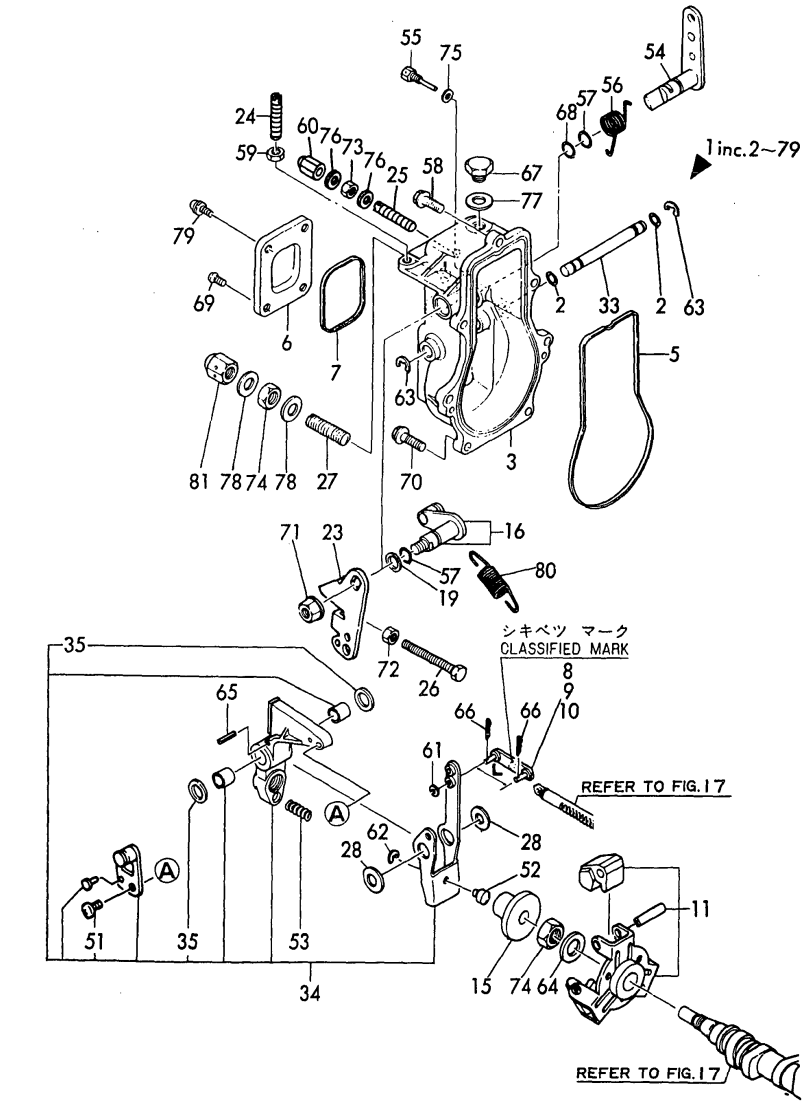

Remarks
1) SELECTIVE PART; CERTAIN THE CLAS
-SIFICATION MARK WHEN PLACE YOUR
ORDER. (REFER TO THE ILLUSTRATION)

(A)=3JH2E (D)=
(B)=3JH2BE (E)=
(C)= (F)=

No.	Lev.	Parts No.	Description	Q'ty (A)	(B)	(C)	(D)	(E)	(F)	I	R
1	1	129171-61000	GOVERNOR ASSY	1	1						
2	2	129155-51280	O-RING, S6	2	2						
3	2	171487-61011	CASE, GOVERNOR	1	1						
5	2	129155-61050	GASKET	1	1						
6	2	129155-61060	COVER, GOVERNOR CASE	1	1						
7	2	129155-61070	GASKET	1	1						
8	2	129155-61120	LINK, L=30 MARK 0	1	1						1
9	2	129155-61130	LINK, L=31 MARK 1	1	1						1
10	2	129155-61140	LINK, L=30.5 MARK 05	1	1						1
11	2	129155-61201	WEIGHT ASSY,GOVERNOR	1	1						
15	2	129155-61341	SLEEVE	1	1						
16	2	129100-61400	SHAFT ASSY	1	1						
19	2	129155-61430	SPACER	1	1						
23	2	129499-61440	LEVER, CONTROL	1	1						
24	2	129155-61450	BOLT, LIMITER	1	1						
25	2	129155-61450	BOLT, LIMITER	1	1						
26	2	129155-61460	BOLT, IDLE	1	1						
27	2	129155-61470	BOLT, CONTROL	1	1						
28	2	129155-61480	SPACER ASSY	2	2						
33	2	129155-61490	SHAFT	1	1						
34	2	129500-61501	LEVER ASSY, GOVERNOR	1	1						
35	3	174307-51700	SHIM SET	2	2						
51	3	26022-060122	SCREW, M6X12	1	1						
52	2	129155-61540	SHIFTER	1	1						
53	2	129470-61650	SPRING, FUEL CONTROL	1	1						
54	2	129473-61801	LEVER, STOP	1	1						
55	2	129155-61810	PIN	1	1						
56	2	129100-61821	SPRING, RETURN	1	1						
57	2	129155-61830	O-RING, S10	1	1						
58	2	129155-61950	BOLT	1	1						
59	2	124550-66370	NUT, M6	1	1						
60	2	119600-66840	NUT, CAP	1	1						
61	2	22117-040000	WASHER, 4	1	1						
62	2	22272-000040	RING, E- 4	1	1						
63	2	22272-000060	RING, E- 6	2	2						
64	2	22287-120000	WASHER, 12	1	1						
65	2	22351-030016	PIN, SPRING 3.0X16	1	1						
66	2	22372-040000	PIN, SNAP 4	2	2						
67	2	23887-100002	PLUG, 10	1	1						
68	2	24311-240100	O-RING, 1AP10A	1	1						
69	2	26022-050102	SCREW, M5X10	2	2						
70	2	26106-060202	BOLT, M6X 20 PLATED	6	6						
71	2	26366-080002	NUT, M8	1	1						
72	2	26756-060002	NUT, LOCK M6	1	1						
73	2	26756-060002	NUT, LOCK M6	1	1						
74	2	26776-120002	NUT, LOCK M12	2	2						
75	2	43400-500390	SEAL WASHER 6S	1	1						
76	2	43400-500400	SEAL WASHER 6	2	2						
77	2	43400-500430	SEAL WASHER 10S	1	1						
78	2	43400-500450	SEAL WASHER 12S	2	2						
79	2	26023-050102	SCREW, M5X10	2	2						

N:Old $\overset{\text{Yes}}{\underset{\text{No}}{\leftrightarrow}}$ New, Q:Old $\overset{\text{No}}{\underset{\text{Yes}}{\leftrightarrow}}$ New, R:Old $\overset{\text{Yes}}{\underset{\text{Yes}}{\leftrightarrow}}$ New, S:Old $\overset{\text{No}}{\underset{\text{No}}{\leftrightarrow}}$ New, W:Add, Z:Discontinued, F:Interchangeable by set, K:Q'ty Change

++ CONTINUE ++

Copyright (C) YANMAR CO., LTD. All RightsReserved.

Fig.22. GOVERNOR

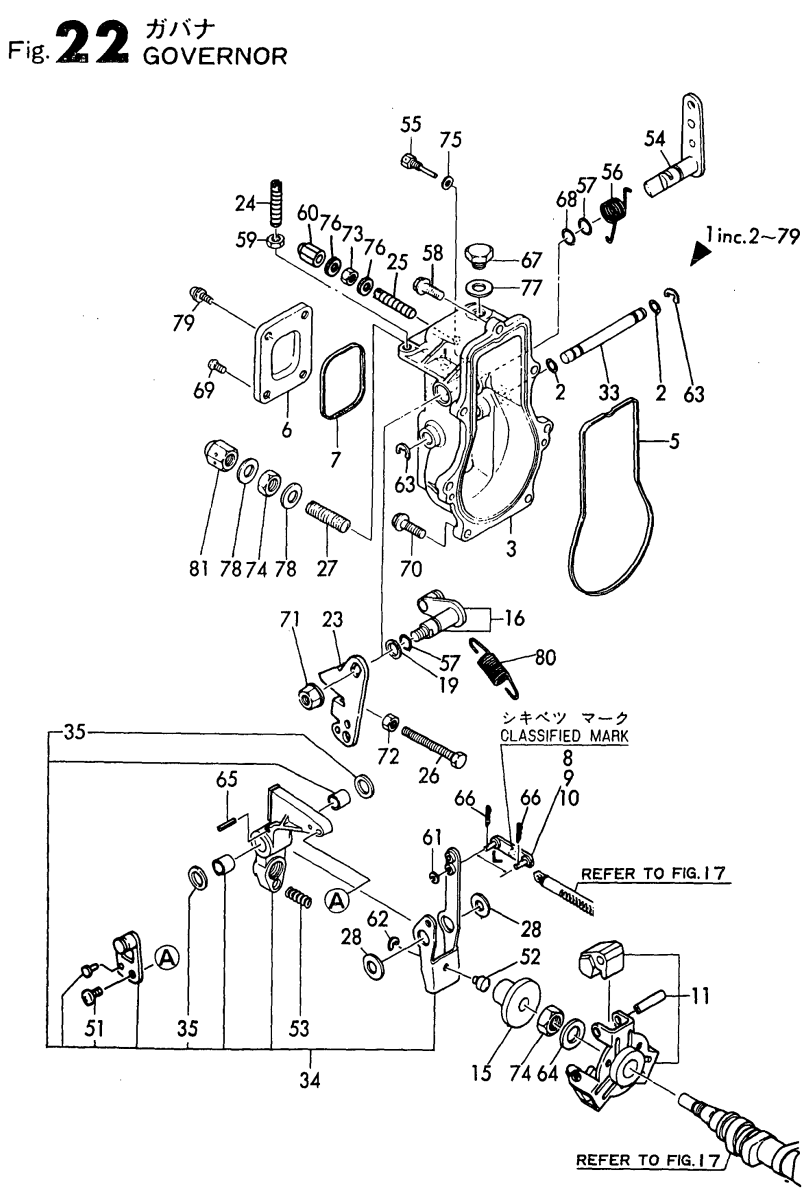

Remarks
1) SELECTIVE PART; CERTAIN THE CLAS
-SIFICATION MARK WHEN PLACE YOUR
ORDER. (REFER TO THE ILLUSTRATION)

(A)=3JH2E (D)=
(B)=3JH2BE (E)=
(C)= (F)=

No.	Lev.	Parts No.	Description	Q'ty (A)	(B)	(C)	(D)	(E)	(F)	I	R
80	1	129100-61730	SPRING, GOVERNOR	1	1						
81	1	129100-61930	NUT, CAP	1	1						

N:Old ←Yes/No→ New, Q:Old ←No/Yes→ New, R:Old ←Yes/Yes→ New, S:Old ←No/No→ New, W:Add, Z:Discontinued, F:Interchangeable by set, K:Q'ty Change

Copyright (C) YANMAR CO., LTD. All RightsReserved.

Fig.23. ENGINE STOP DEVICE

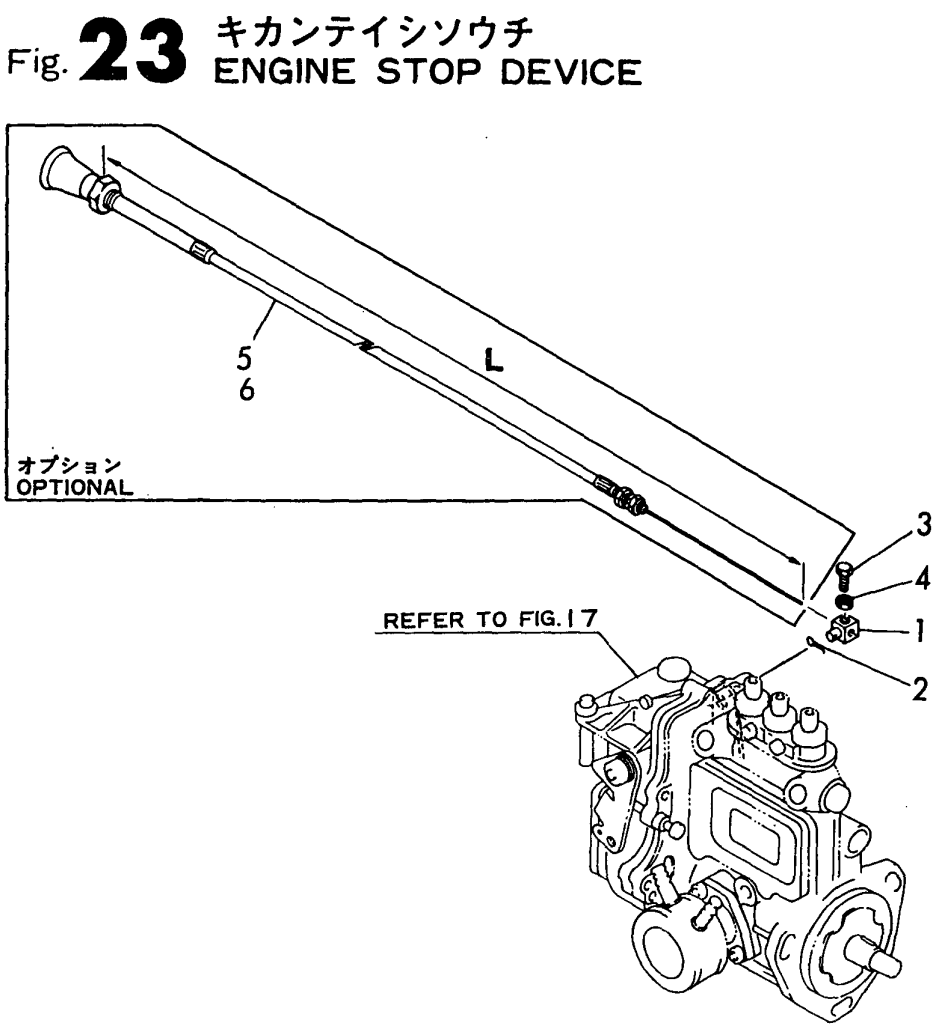

(A)=3JH2E
(B)=3JH2BE
(C)=
(D)=
(E)=
(F)=

No.	Lev.	Parts No.	Description	Q'ty (A)	(B)	(C)	(D)	(E)	(F)	I	R
1	1	129590-67310	RETAINER	1	1						
2	1	22414-250150	PIN, COTTER 2.5X15	1	1						
3	1	26116-050142	BOLT, M5X 14 PLATED	1	1						
4	1	26756-050002	NUT, LOCK M5	1	1						
5	1	129470-67550	CABLE, STOP L=4000	1	1						1
6	1	129470-67560	CABLE, STOP L=7000	1	1						1

Remarks
1) OPTIONAL

N:Old $\xleftrightarrow[\text{No}]{\text{Yes}}$ New, Q:Old $\xleftrightarrow[\text{Yes}]{\text{No}}$ New, R:Old $\xleftrightarrow[\text{Yes}]{\text{Yes}}$ New, S:Old $\xleftrightarrow[\text{No}]{\text{No}}$ New, W:Add, Z:Discontinued, F:Interchangeable by set, K:Q'ty Change

Copyright (C) YANMAR CO., LTD. All RightsReserved.

Fig.24. SPEED REMOTE CONTROL DEVICE

Fig. 24 スピードコントロールソウチ SPEED REMOTE CONTROL DEVICE

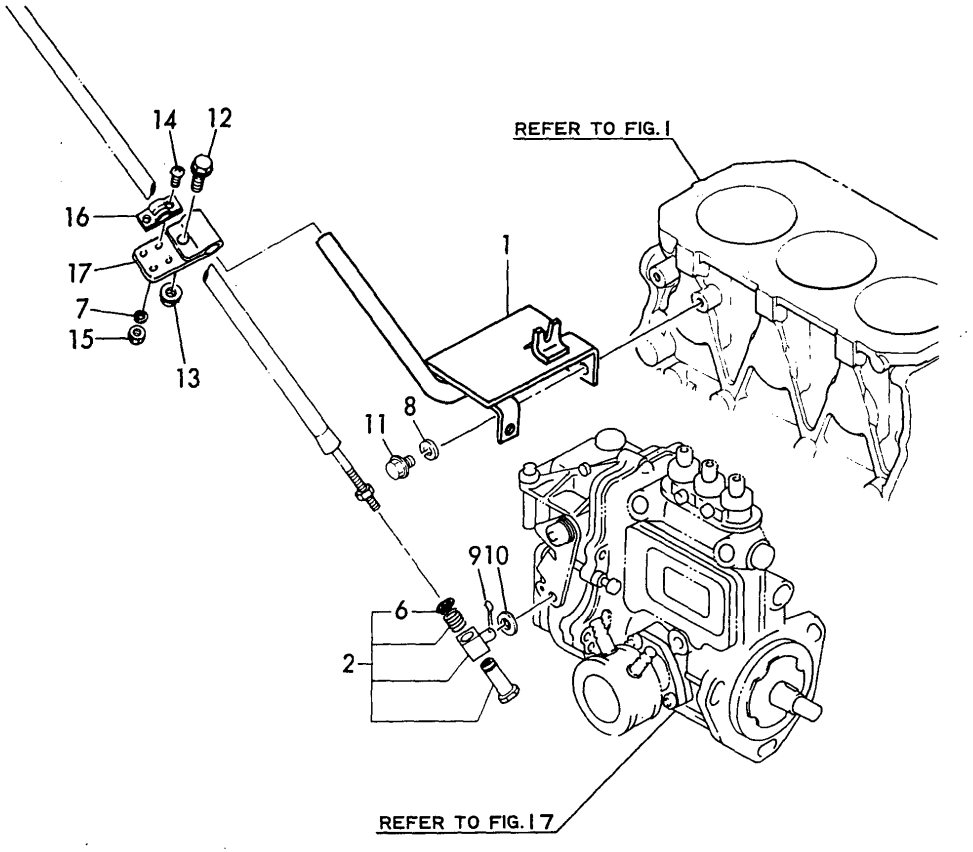

(A)=3JH2E
(B)=3JH2BE
(C)=
(D)=
(E)=
(F)=

No.	Lev.	Parts No.	Description	Q'ty (A)	(B)	(C)	(D)	(E)	(F)	I	R
1	1	129171-67100	BRACKET, GOVERNOR	1	1						
2	1	129470-67200	RETAINER ASSY	1	1						
6	2	22242-000100	RING, 10	1	1						
7	1	22217-050000	WASHER, SPRING 5	2	2						
8	1	22217-080000	WASHER, SPRING 8	2	2						
9	1	22414-250150	PIN, COTTER 2.5X15	1	1						
10	1	23414-080000	GASKET, 8X1.0	1	1						
11	1	26106-080122	BOLT, M8X 12 PLATED	2	2						
12	1	26106-080252	BOLT, M8X 25 PLATED	1	1						
13	1	26366-080002	NUT, M8	1	1						
14	1	26557-050122	SCREW, M5X12	2	2						
15	1	26716-050002	NUT, M5	2	2						
16	1	41710-000410	CLAMP	1	1						
17	1	41701-001720	BRACKET	1	1						

N:Old ◄Yes/No► New, Q:Old ◄No/Yes► New, R:Old ◄Yes/Yes► New, S:Old ◄No/No► New, W:Add, Z:Discontinued, F:Interchangeable by set, K:Q'ty Change

Copyright (C) YANMAR CO., LTD. All RightsReserved.

Fig.25. STARTING MOTOR

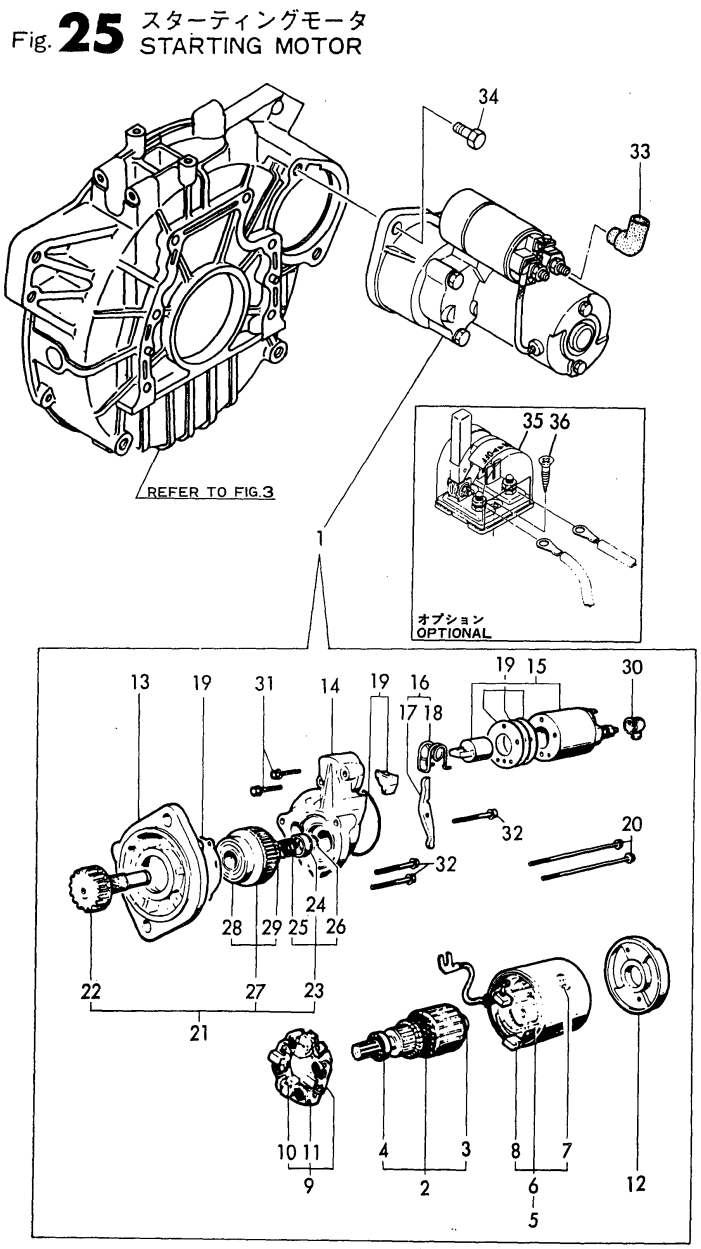

(A)=3JH2E
(B)=3JH2BE
(C)=
(D)=
(E)=
(F)=

No.	Lev.	Parts No.	Description	Q'ty (A)	(B)	(C)	(D)	(E)	(F)	I	R
1	1	171008-77010	STARTER, S114-483	1	1						
2	2	171008-77400	ARMATURE ASSY	1	1						
3	3	171008-77410	BEARING	1	1						
4	3	171008-77420	BEARING	1	1						
5	2	171008-77430	YOKE ASSY	1	1						
6	3	171008-77440	COIL ASSY, FIELD	1	1						
7	4	171008-77450	SCREW	4	4						
8	4	171008-77460	BRUSH (+)	2	2						
9	2	171008-77470	HOLDER ASSY, BRUSH	1	1						
10	3	171008-77480	BRUSH (-)	2	2						
11	3	171008-77490	SPRING, BRUSH	4	4						
12	2	171008-77500	COVER, REAR	1	1						
13	2	171008-77510	CASE, GEAR	1	1						
14	2	171008-77520	HOUSING, CENTER	1	1						
15	2	171008-77530	SWITCH, MAGNETIC	1	1						
16	2	171008-77540	LEVER SET	1	1						
17	3	171008-77550	LEVER, SHIFT	1	1						
18	3	171008-77560	SPRING	1	1						
19	2	171008-77571	COVER KIT, DUST	1	1						
20	2	171008-77640	BOLT, THROUGH	2	2						
21	2	171008-77650	PINION ASSY	1	1						
22	3	171008-77660	SHAFT	1	1						
23	3	171008-77670	STOPPER SET	1	1						
24	4	171008-77680	STOPPER	1	1						
25	4	171008-77690	SPRING, RETURN	1	1						
26	4	171008-77700	CLIP	1	1						
27	3	171008-77720	CLUTCH ASSY	1	1						
28	4	171008-77730	BEARING, BALL	1	1						
29	4	171008-77740	BEARING	1	1						
30	2	171008-77750	COVER	1	1						
31	2	26106-060322	BOLT, M6X 32 PLATED	2	2						
32	2	26106-060402	BOLT, M6X 40 PLATED	3	3						
33	1	124550-77030	COVER, TERMINAL	1	1						
34	1	26116-120302	BOLT, M12X 30 PLATED	2	2						
35	1	123310-77640	SWITCH, BATTERY	1	1						1
36	1	22724-800380	SCREW, 8.0X38	2	2						1

Remarks
(1) OPTIONAL

N:Old $\xleftrightarrow[\text{No}]{\text{Yes}}$ New, Q:Old $\xleftrightarrow[\text{Yes}]{\text{No}}$ New, R:Old $\xleftrightarrow[\text{Yes}]{\text{Yes}}$ New, S:Old $\xleftrightarrow[\text{No}]{\text{No}}$ New, W:Add, Z:Discontinued, F:Interchangeable by set, K:Q'ty Change

Copyright (C) YANMAR CO., LTD. All RightsReserved.

Fig.26. GENERATOR

Fig. 26 ジェネレータ GENERATOR

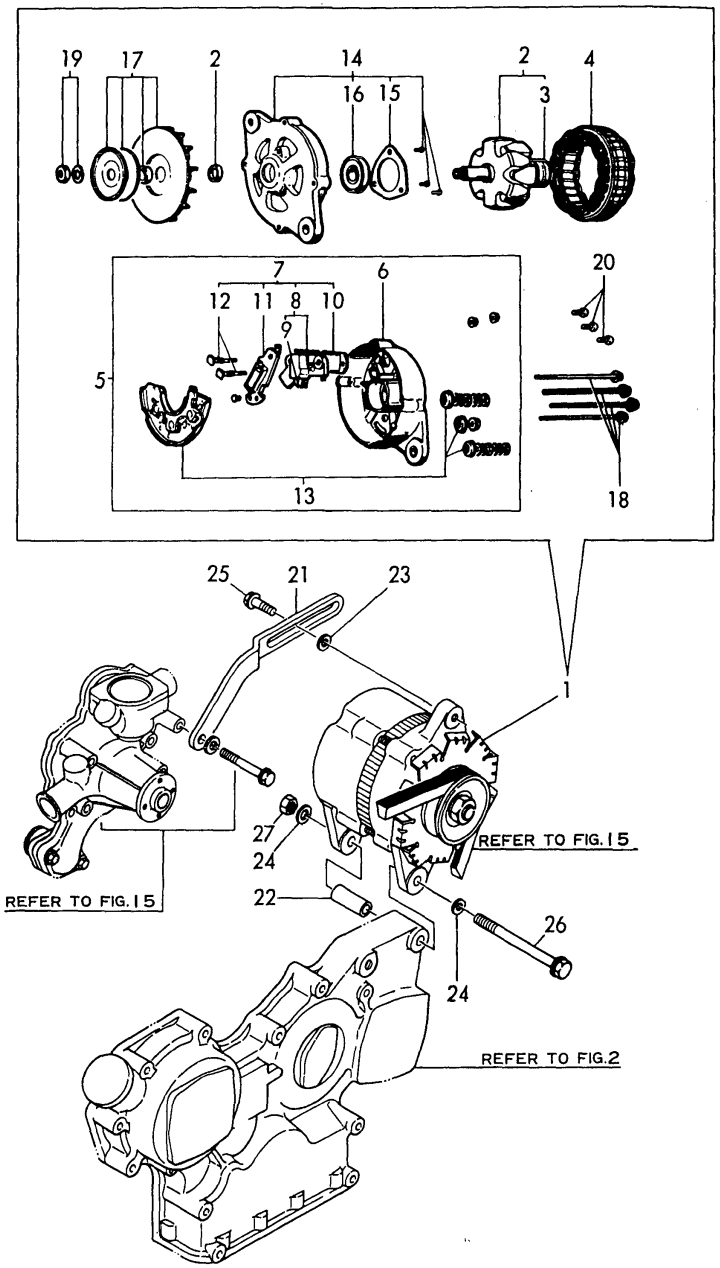

(A)=3JH2E (D)=
(B)=3JH2BE (E)=
(C)= (F)=

No.	Lev.	Parts No.	Description	Q'ty (A)	(B)	(C)	(D)	(E)	(F)	I	R
1	1	129772-77200	GENERATOR(12V-55A)	1	1						
2	2	XL15571001	ROTOR ASSY	1	1						
3	3	X6201SD	BALL BEARING	1	1						
4	2	XL15542001	STATOR ASSY	1	1						
5	2	XL15553002	COVER ASSY, REAR	1	1						
6	3	XL22553012	COVER, REAR	1	1						
7	3	XL1556315	REGULATOR ASSY,BRUSH	1	1						
8	4	XL2255330	BRUSH ASSY	1	1						1
9	4	XL12013262	BRUSH	2	2						
10	4	XTR1Z63	REGULATOR	1	1						
11	4	XL2251318	CONDENCER ASSY	1	1						
12	4	XL13513134	BOLT M5	2	2						
13	3	XL2253320	DIODE ASSY	1	1						
14	2	XL2253400	FRONT COVER ASSY	1	1						
15	3	XL15014042	BEARING RETAINER	1	1						
16	3	X6203BM	BALL BEARING	1	1						
17	2	XL22555001	PULLEY ASSY	1	1						
18	2	XL15018015	BOLT, THROUGH	4	4						
19	2	XL1501810	NUT ASSY, PULLEY	1	1						
20	2	XL15028001	SCREW ASSY	1	1						
21	1	129470-77330	ADJUSTER, BELT	1	1						
22	1	129470-77340	PIECE, DISTANCE	1	1						
23	1	22137-080000	WASHER, 8	1	1						
24	1	22137-100000	WASHER, 10	2	2						
25	1	26106-080252	BOLT, M8X 25 PLATED	1	1						
26	1	26116-101202	BOLT, M10X120 PLATED	1	1						
27	1	26716-100002	NUT, M10	1	1						

N:Old ←Yes/No→ New, Q:Old ←No/Yes→ New, R:Old ←Yes/Yes→ New, S:Old ←No/No→ New, W:Add, Z:Discontinued, F:Interchangeable by set, K:Q'ty Change

Copyright (C) YANMAR CO., LTD. All RightsReserved.

Fig.27. WIRE HARNESS

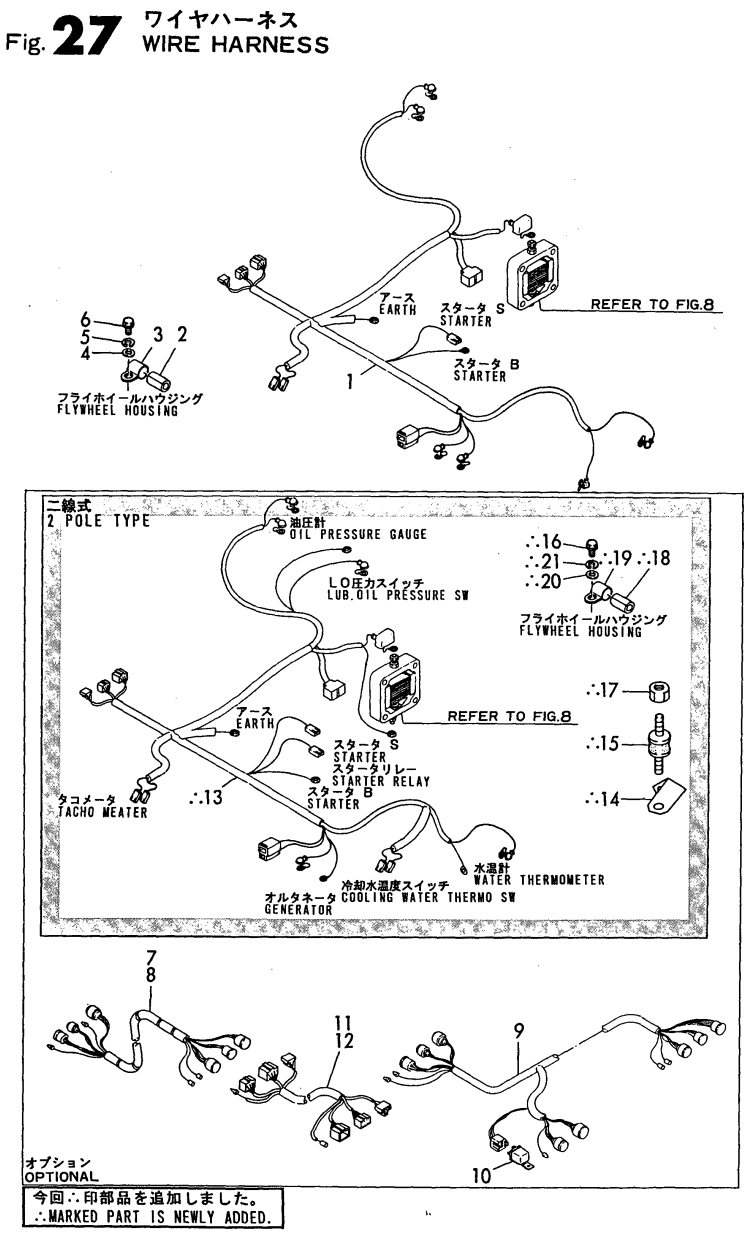

(A)=3JH2E (D)=
(B)=3JH2BE (E)=
(C)= (F)=

No.	Lev.	Parts No.	Description	Q'ty (A)	(B)	(C)	(D)	(E)	(F)	I	R
1	1	129198-77932	HARNESS, WIRE	1	1						
2	1	124770-77940	PROTECTOR	1	1						
3	1	124070-77950	CLAMP	1	1						
4	1	22137-080000	WASHER, 8	1	1						
5	1	22217-080000	WASHER, SPRING 8	1	1						
6	1	26106-080162	BOLT, M8X 16 PLATED	1	1						
7	1	119171-77701	HARNESS, WIRE 6M	1	1						1
8	1	127610-77710	HARNESS, WIRE 3.8M	1	1						1
9	1	119171-77980	HARNESS, WIRE	1	1						1
10	1	124617-91850	RELAY	1	1						1
11	1	129574-77710	HARNESS, WIRE 4M	1	1						1
12	1	129574-77720	HARNESS, WIRE 6M	1	1						1
13	1	129170-77820	HARNESS, WIRE	1	1					W	2
	(A=E01012)	(B=E01011)									
14	1	129590-59200	RETAINER, PIPE	1	1					W	2
	(A=E01012)	(B=E01011)									
15	1	194555-62750	RUBBER, ABSORBER	1	1					W	2
	(A=E01012)	(B=E01011)									
16	1	26106-080202	BOLT, M8X 20 PLATED	1	1					W	2
	(A=E01012)	(B=E01011)									
17	1	26716-080002	NUT, M8	2	2					W	2
	(A=E01012)	(B=E01011)									
18	1	124770-77940	PROTECTOR	1	1					W	2
	(A=E01012)	(B=E01011)									
19	1	124070-77950	CLAMP	1	1					W	2
	(A=E01012)	(B=E01011)									
20	1	22137-080000	WASHER, 8	1	1					W	2
	(A=E01012)	(B=E01011)									
21	1	22217-080000	WASHER, SPRING 8	1	1					W	2
	(A=E01012)	(B=E01011)									

Remarks
(1) OPTIONAL
(2) OPTIONAL:2 POLE TYPE

N:Old $\xleftrightarrow[\text{No}]{\text{Yes}}$ New, Q:Old $\xleftrightarrow[\text{Yes}]{\text{No}}$ New, R:Old $\xleftrightarrow[\text{Yes}]{\text{Yes}}$ New, S:Old $\xleftrightarrow[\text{No}]{\text{No}}$ New, W:Add, Z:Discontinued, F:Interchangeable by set, K:Q'ty Change

Copyright (C) YANMAR CO., LTD. All RightsReserved.

Fig.28. TOOL

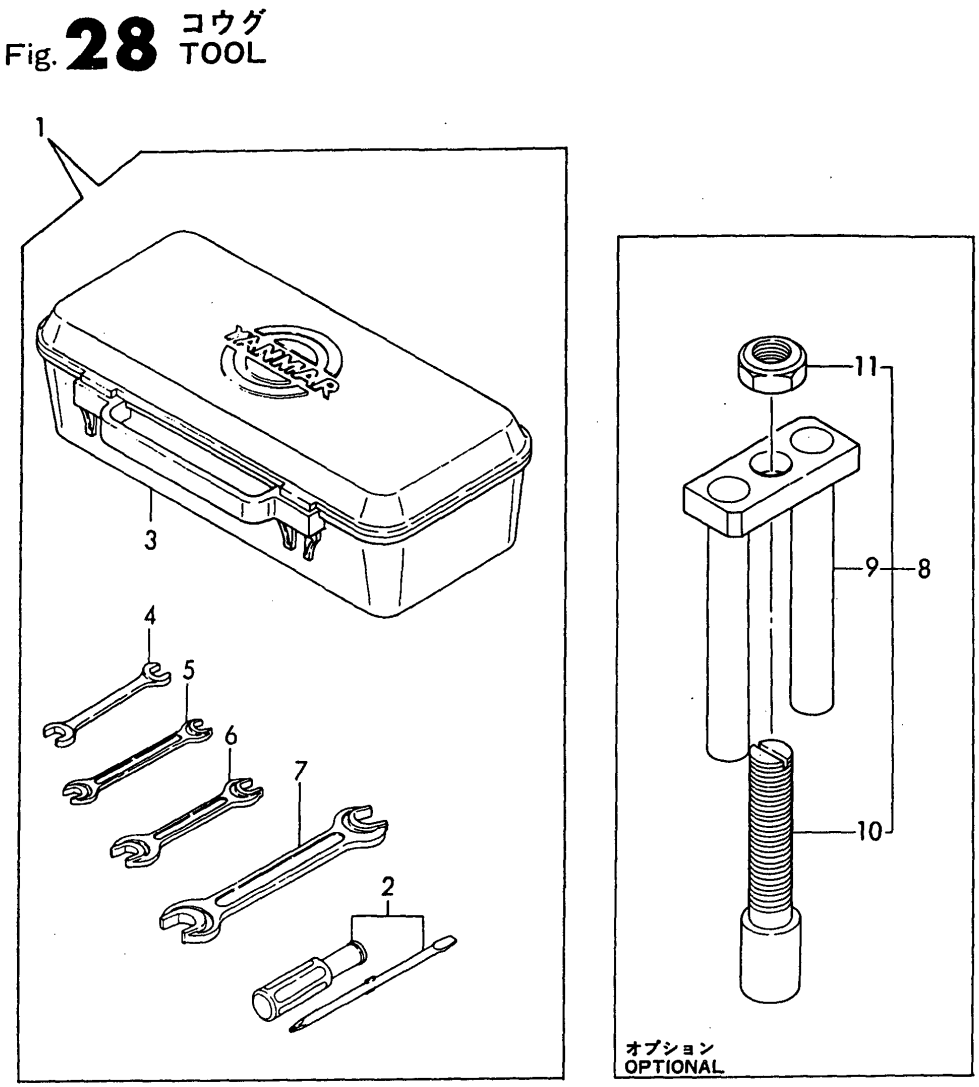

(A)=3JH2E (D)=
(B)=3JH2BE (E)=
(C)= (F)=

No.	Lev.	Parts No.	Description	Q'ty (A)	(B)	(C)	(D)	(E)	(F)	I	R
1	1	704507-92100	BOX ASSY, TOOL	1	1						
2	2	104200-92350	DRIVER, SCREW	1	1						
3	2	104200-92600	BOX, TOOL	1	1						
4	2	28110-100130	SPANNER, 10X13	1	1						
5	2	28110-120140	SPANNER, 12X14	1	1						
6	2	28110-170190	SPANNER, 17X19	1	1						
7	2	28110-220240	SPANNER, 22X24	1	1						
8	1	129470-92300	TOOL ASSY, NOZZLE	1	1						1
9	2	129470-92310	TOOL,NOZZLE REMOVE A	1	1						1
10	2	129470-92320	TOOL,NOZZLE REMOVE B	1	1						1
11	2	26716-120002	NUT, M12	1	1						1

Remarks
1) OPTIONAL

N:Old $\overset{\text{Yes}}{\underset{\text{No}}{\leftrightarrow}}$ New, Q:Old $\overset{\text{No}}{\underset{\text{Yes}}{\leftrightarrow}}$ New, R:Old $\overset{\text{Yes}}{\underset{\text{Yes}}{\leftrightarrow}}$ New, S:Old $\overset{\text{No}}{\underset{\text{No}}{\leftrightarrow}}$ New, W:Add, Z:Discontinued, F:Interchangeable by set, K:Q'ty Change

Copyright (C) YANMAR CO., LTD. All RightsReserved.

Fig.29. CLUTCH

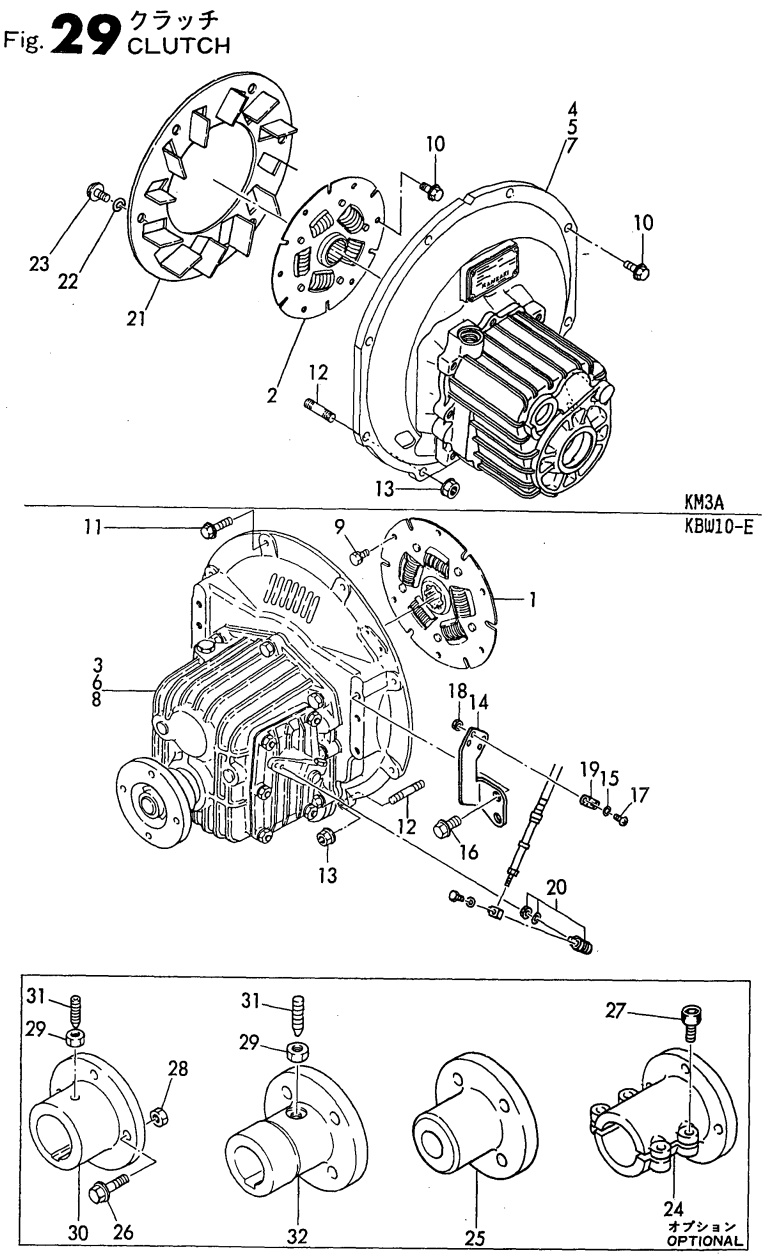

(A)=3JH2E (D)=
(B)=3JH2BE (E)=
(C)= (F)=

No.	Lev.	Parts No.	Description	Q'ty (A)	(B)	(C)	(D)	(E)	(F)	I	R
1	1	177099-03500	DISK, DAMPER	1							
2	1	177070-03520	DISK, DAMPER D190		1						
3	1	128670-81010	CLUTCH ASSY, 2.14	1							
4	1	129171-81010	CLUTCH ASSY, 2.33		1						
5	1	129171-81020	CLUTCH ASSY, I=2.64		1						
6	1	128670-81020	CLUTCH ASSY, I=2.83	1							
7	1	129170-81030	CLUTCH ASSY, I=3.21		1						
8	1	129171-81070	CLUTCH ASSY, I=2.45	1							
9	1	26013-080142	BOLT, M8X 14	6							
10	1	26106-080162	BOLT, M8X 16 PLATED		6						
11	1	26106-080252	BOLT, M8X 25 PLATED	6	6						
12	1	26226-080222	STUD, M8X 22	2	2						
13	1	26366-080002	NUT, M8	2	2						
14	1	129171-86300	BRACKET	1							
15	1	22217-050000	WASHER, SPRING 5	2							
16	1	26106-100162	BOLT, M10X 16 PLATED	2							
17	1	26557-050122	SCREW, M5X12	2							
18	1	26716-050002	NUT, M5	2							
19	1	41710-000410	CLAMP	1							
20	1	41710-001300	JOINT, BALL	1							
21	1	177073-03191	FAN		1						
22	1	22217-080000	WASHER, SPRING 8		6						
23	1	26106-080162	BOLT, M8X 16 PLATED		6						
24	1	104214-83980	COUPLING	1	1						1
25	1	105583-85900	COUPLING, 22	1	1						1
26	1	26106-100322	BOLT, M10X 32 PLATED	4	4						1
27	1	26450-080282	BOLT, M8X 28	4	4						1
28	1	26706-100002	NUT, M10	4	4						1
29	1	26756-080002	NUT, LOCK M8	1	1						1
30	1	48110-028063	COUPLING, TAPER 28	1	1						1
31	1	48110-032411	SCREW	1	1						1
32	1	48110-032502	COUPLING, 30	1	1						1

Remarks
1) OPTIONAL PART.

N:Old $\frac{\text{Yes}}{\text{No}}$ New, Q:Old $\frac{\text{No}}{\text{Yes}}$ New, R:Old $\frac{\text{Yes}}{\text{Yes}}$ New, S:Old $\frac{\text{No}}{\text{No}}$ New, W:Add, Z:Discontinued, F:Interchangeable by set, K:Q'ty Change

Copyright (C) YANMAR CO., LTD. All RightsReserved.

Fig.30. GENERATOR(OPTIONAL)

Fig. 30 ジェネレータ(オプション) GENERATOR(OPTIONAL)

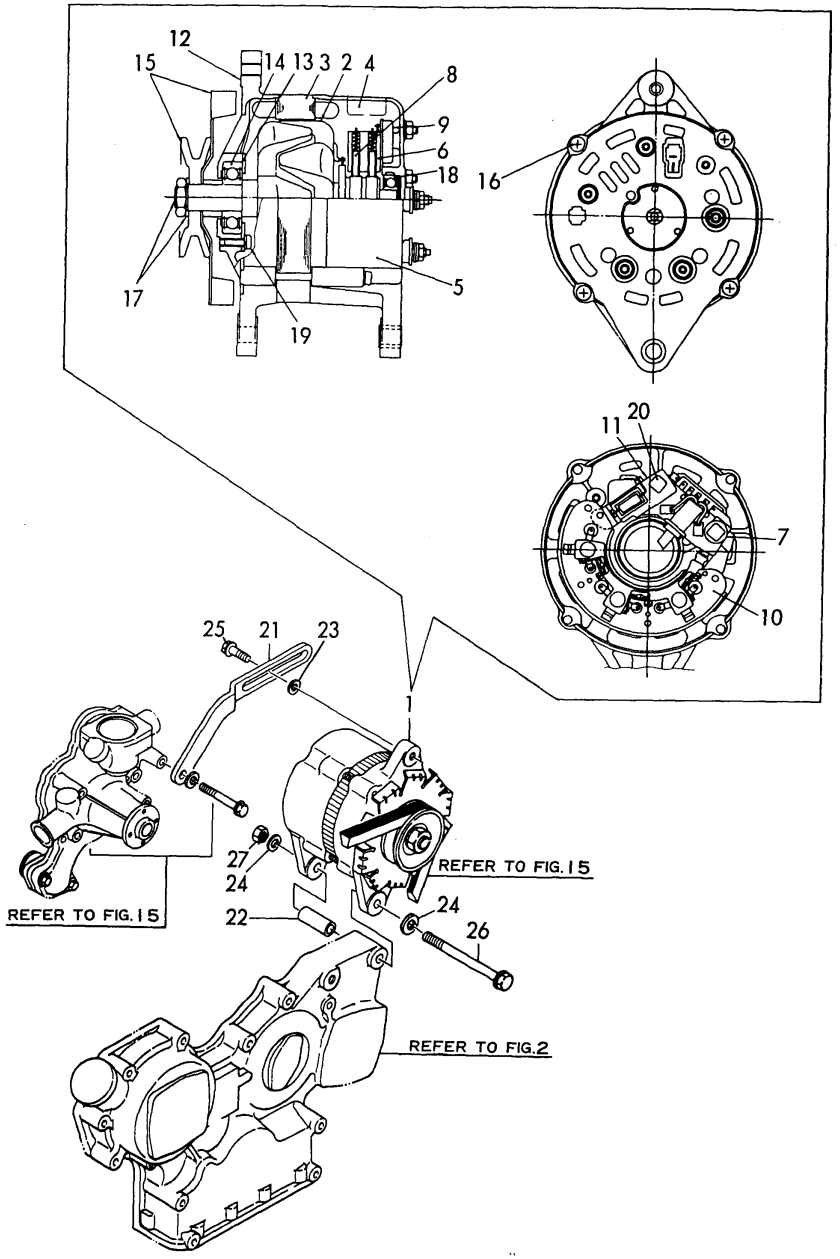

(A)=3JH2E (D)=
(B)=3JH2BE (E)=
(C)= (F)=

No.	Lev.	Parts No.	Description	Q'ty (A)	(B)	(C)	(D)	(E)	(F)	I	R
1	1	129470-77200	GENERATOR	1	1						
2	2	XL1805100	ROTOR ASY	1	1						
3	2	XL1801200	STATOR ASY	1	1						
4	2	XL1809300	COVER ASSY, REAR	1	1						
5	3	XL1805301	COVER, REAR	1	1						
6	3	XL1556315	REGULATOR ASSY,BRUSH	1	1						
7	4	XL2255320	DIODE L225-5320	1	1						
8	4	XL1801335	BRUSH	2	2						
9	4	XTR1Z63	REGULATOR	1	1						
10	3	XL1808320	DIODE ASY	1	1						
11	3	XL2251318	CONDENCER ASSY	1	1						
12	2	XL23534011	COVER ASSY, FRONT	1	1						
13	3	XL150M14041	RETAINER	1	1						
14	3	X6303BM	BALL BEARING 6303B	1	1						
15	2	XL1805500	PULLEY ASSY	1	1						
16	2	XL18018015	THROUGH BOLT	4	4						
17	2	XL1501810	NUT ASSY, PULLEY	1	1						
18	2	X6201NC	BALL BEARING	1	1						
19	2	XL15028001	SCREW ASSY	1	1						
20	2	124080-77520	BOLT M5	2	2						
21	1	129470-77330	ADJUSTER, BELT	1	1						
22	1	129470-77340	PIECE, DISTANCE	1	1						
23	1	22137-080000	WASHER, 8	1	1						
24	1	22137-100000	WASHER, 10	2	2						
25	1	26106-080252	BOLT, M8X 25 PLATED	1	1						
26	1	26116-101202	BOLT, M10X120 PLATED	1	1						
27	1	26716-100002	NUT, M10	1	1						

N:Old $\overset{\text{Yes}}{\underset{\text{No}}{\leftrightarrows}}$ New, Q:Old $\overset{\text{No}}{\underset{\text{Yes}}{\leftrightarrows}}$ New, R:Old $\overset{\text{Yes}}{\underset{\text{Yes}}{\leftrightarrows}}$ New, S:Old $\overset{\text{No}}{\underset{\text{No}}{\leftrightarrows}}$ New, W:Add, Z:Discontinued, F:Interchangeable by set, K:Q'ty Change

Copyright (C) YANMAR CO., LTD. All RightsReserved.

Fig.31. MIXING ELBOW(OPTIONAL)

Fig. 31 ミキシングエルボ(オプション) MIXING ELBOW(OPTIONAL)

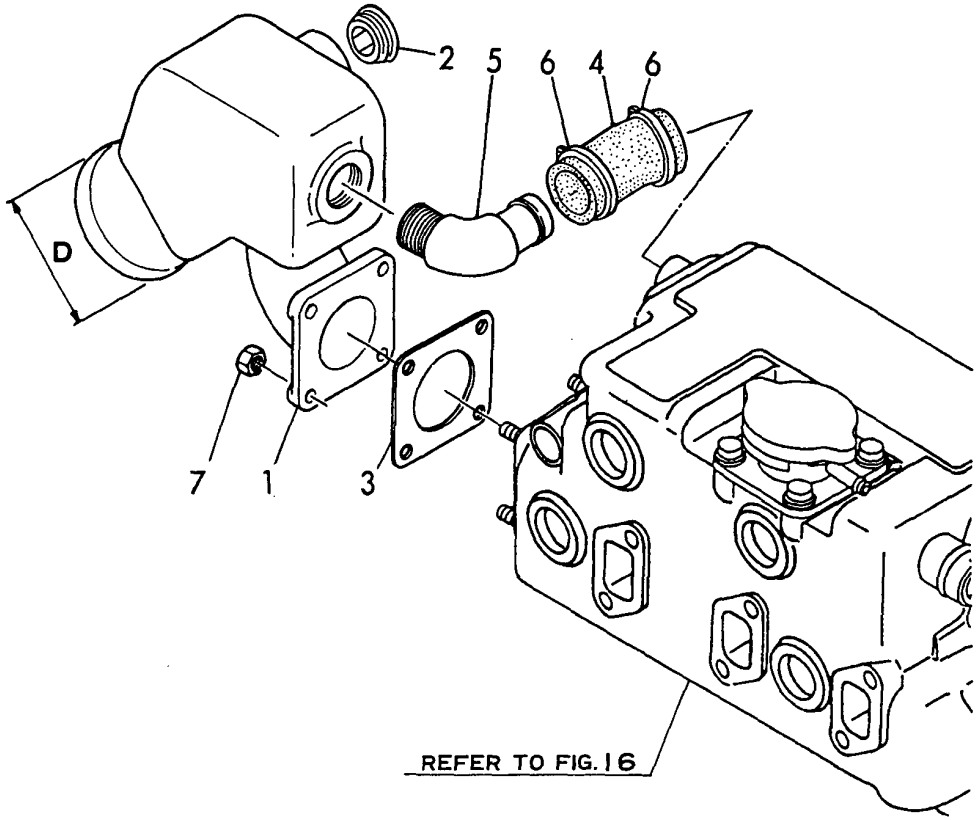

(A)=3JH2E
(B)=3JH2BE
(C)=
(D)=
(E)=
(F)=

No.	Lev.	Parts No.	Description	Q'ty (A)	(B)	(C)	(D)	(E)	(F)	I	R
1	1	129470-13541	ELBOW	1	1						
2	1	129472-13560	PLUG, PT3/4	1	1						
3	1	129472-18090	GASKET	1	1						
4	1	129171-49030	PIPE, WATER	1	1						
5	1	123325-49490	ELBOW	1	1						
6	1	23000-035000	CLAMP, 35	2	2						
7	1	26703-080002	NUT, M8	4	4						

N:Old $\overset{\text{Yes}}{\underset{\text{No}}{\leftrightarrows}}$ New, Q:Old $\overset{\text{No}}{\underset{\text{Yes}}{\leftrightarrows}}$ New, R:Old $\overset{\text{Yes}}{\underset{\text{Yes}}{\leftrightarrows}}$ New, S:Old $\overset{\text{No}}{\underset{\text{No}}{\leftrightarrows}}$ New, W:Add, Z:Discontinued, F:Interchangeable by set, K:Q'ty Change

Copyright (C) YANMAR CO., LTD. All RightsReserved.

Fig.32. OIL SUC. PUMP/DRAIN & BILGE PUMP(OPTIONAL)

(A)=3JH2E
(B)=3JH2BE
(C)=
(D)=
(E)=
(F)=

Fig. 32 デンドウビルジポンプ(12V)(オプション) ELECTRIC BILGE PUMP(12V)(OPTIONAL)

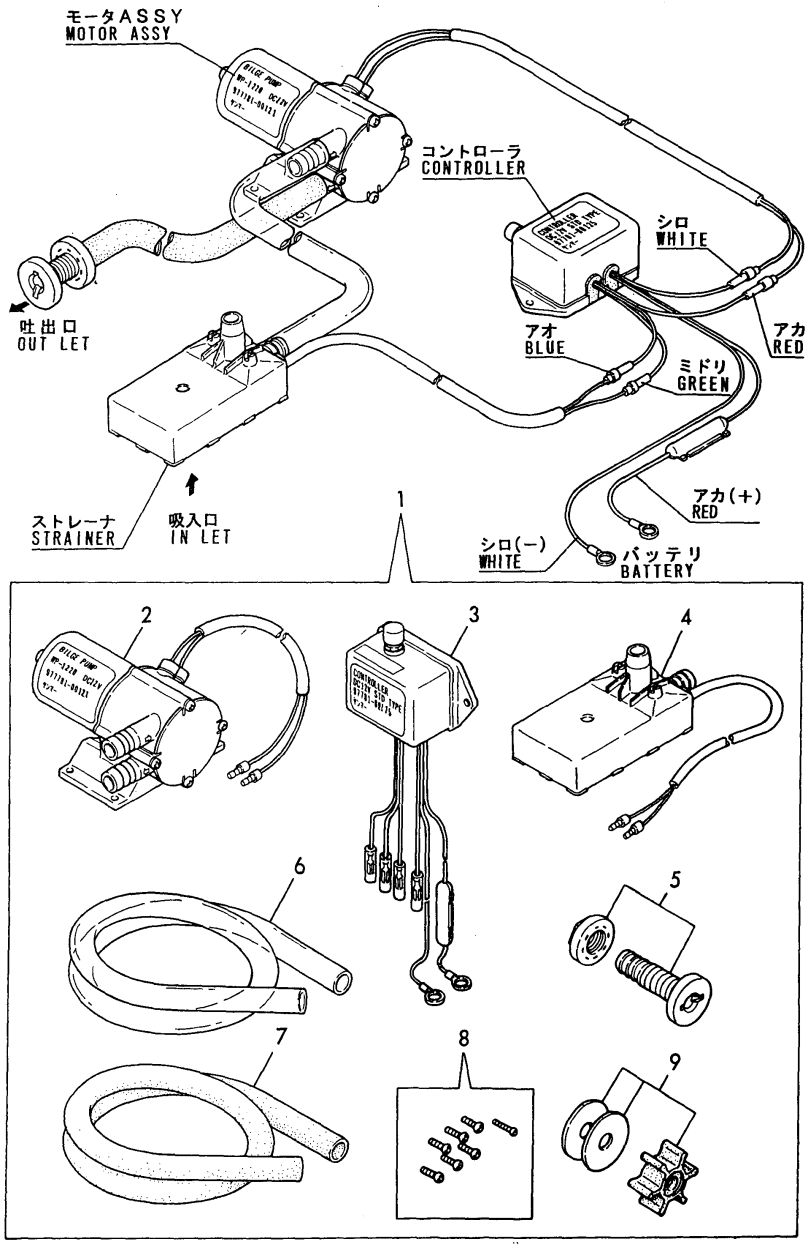

No.	Lev.	Parts No.	Description	Q'ty (A)	(B)	(C)	(D)	(E)	(F)	I	R
1	1	977781-00121	PUMP (12V).BILGE	1							
2	2	977781-00123	MOTOR ASSY(BILG PUMP	1							
3	2	977781-00125	CONTROLLER	1							
4	2	X17910000XX	STRAINER	1							
5	2	X179100100X	PIPE ASSY	1							
6	2	X0044021509	HOSE A	1							
7	2	X0044021500	PIPE(B)	1							
8	2	X199903800X	SCREW KIT	1							
9	2	X418500100X	IMPELLER KIT	1							

N:Old ←Yes/No→ New, Q:Old ←No/Yes→ New, R:Old ←Yes/Yes→ New, S:Old ←No/No→ New, W:Add, Z:Discontinued, F:Interchangeable by set, K:Q'ty Change

Copyright (C) YANMAR CO., LTD. All RightsReserved.

Fig.33. OIL SUC. PUMP/DRAIN & BILGE PUMP(OPTIONAL)

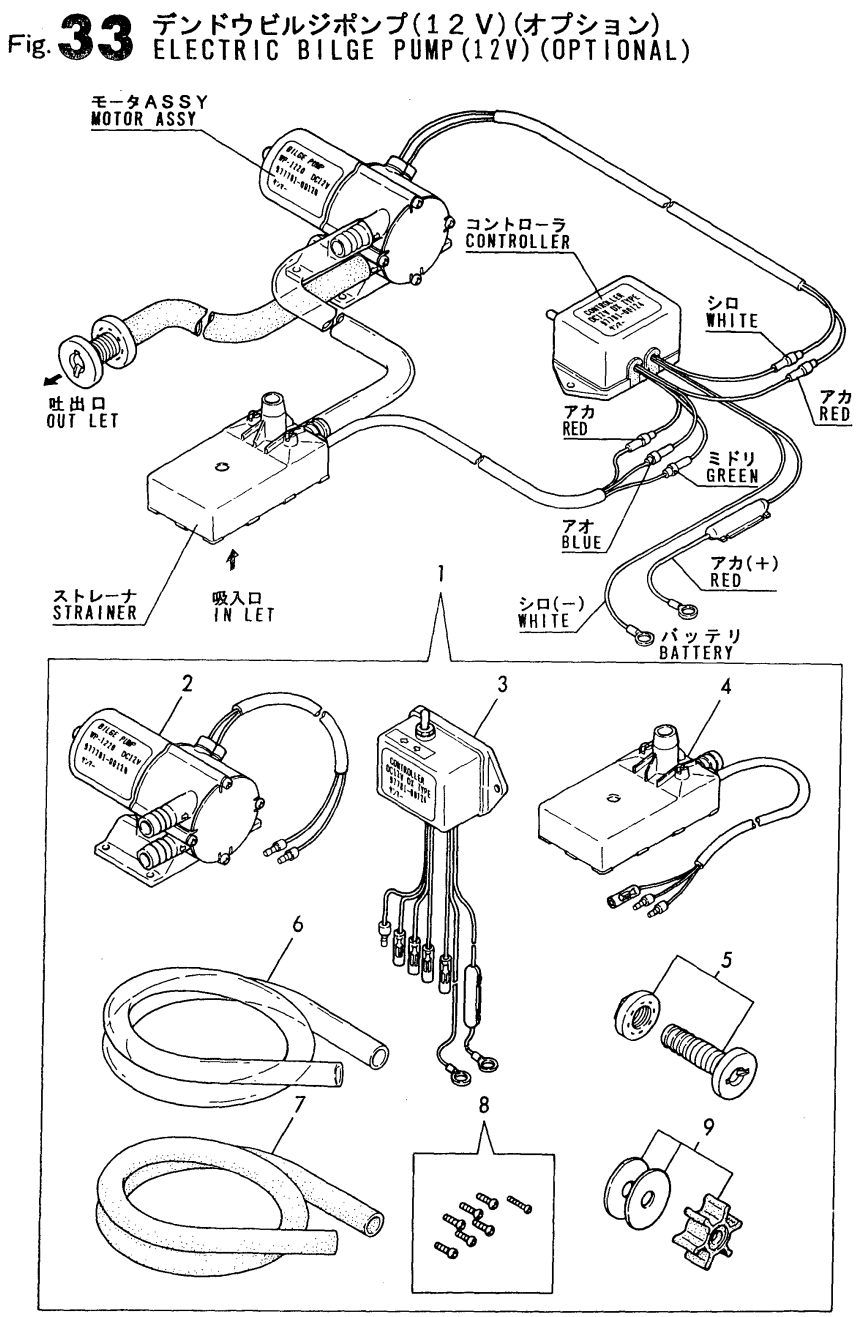

(A)=3JH2E (D)=
(B)=3JH2BE (E)=
(C)= (F)=

No.	Lev.	Parts No.	Description	Q'ty (A)	(B)	(C)	(D)	(E)	(F)	I	R
1	1	977781-00120	PUMP (12V).BILGE	1							
2	2	977781-00123	MOTOR ASSY(BILG PUMP	1							
3	2	977781-00124	CONTROLLER	1							
4	2	X17910001XX	STRAINER	1							
5	2	X179100100X	PIPE ASSY	1							
6	2	X0044021509	HOSE A	1							
7	2	X0044021500	PIPE(B)	1							
8	2	X199903800X	SCREW KIT	1							
9	2	X418500100X	IMPELLER KIT	1							

N:Old $\xleftarrow[\text{No}]{\text{Yes}}$ New, Q:Old $\xleftarrow[\text{Yes}]{\text{No}}$ New, R:Old $\xleftarrow[\text{Yes}]{\text{Yes}}$ New, S:Old $\xleftarrow[\text{No}]{\text{No}}$ New, W:Add, Z:Discontinued, F:Interchangeable by set, K:Q'ty Change

Copyright (C) YANMAR CO., LTD. All RightsReserved.

Fig.34. SEA WATER STRAINER(OPTIONAL)

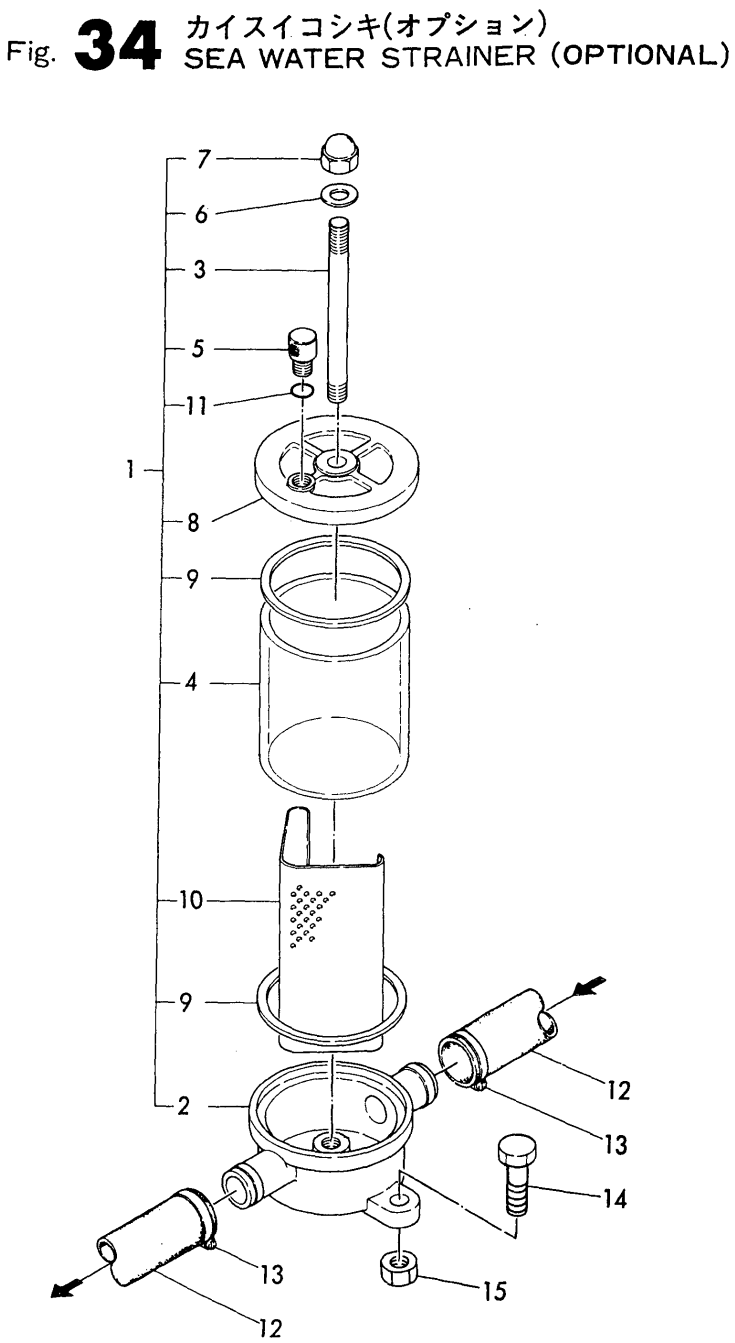

(A)=3JH2E (D)=
(B)=3JH2BE (E)=
(C)= (F)=

No.	Lev.	Parts No.	Description	Q'ty (A)	(B)	(C)	(D)	(E)	(F)	I	R
1	1	129795-48800	STRAINER	1	1						
2	2	XTST25S001	BODY	1	1						
3	2	XTST25S002	BOLT M 8X125	1	1						
4	2	XTST25S003	PIPE, OUTER	1	1						
5	2	XTST25S004	PLUG M 8	1	1						
6	2	XTST25S005	PACKING	1	1						
7	2	26664-080002	NUT, CAP M8	1	1						
8	2	XTST25S007	COVER	1	1						
9	2	XTST25S008	PACKING	2	2						
10	2	XTST25S009	FILTER	1	1						
11	2	24311-000060	O-RING, 1AP6.0	1	1						
12	1	23072-101000	HOSE, 10X1000	1	1						
13	1	23000-041000	CLAMP, 41	2	2						
14	1	26116-080302	BOLT, M8X 30 PLATED	2	2						
15	1	26703-080002	NUT, M8	2	2						

N:Old $\overset{\text{Yes}}{\underset{\text{No}}{\leftrightarrows}}$ New, Q:Old $\overset{\text{No}}{\underset{\text{Yes}}{\leftrightarrows}}$ New, R:Old $\overset{\text{Yes}}{\underset{\text{Yes}}{\leftrightarrows}}$ New, S:Old $\overset{\text{No}}{\underset{\text{No}}{\leftrightarrows}}$ New, W:Add, Z:Discontinued, F:Interchangeable by set, K:Q'ty Change

Copyright (C) YANMAR CO., LTD. All RightsReserved.

Fig.35. FUEL TANK(OPTIONAL)

Fig. 35 FOタンク（オプション） FUEL TANK(OPTIONAL)

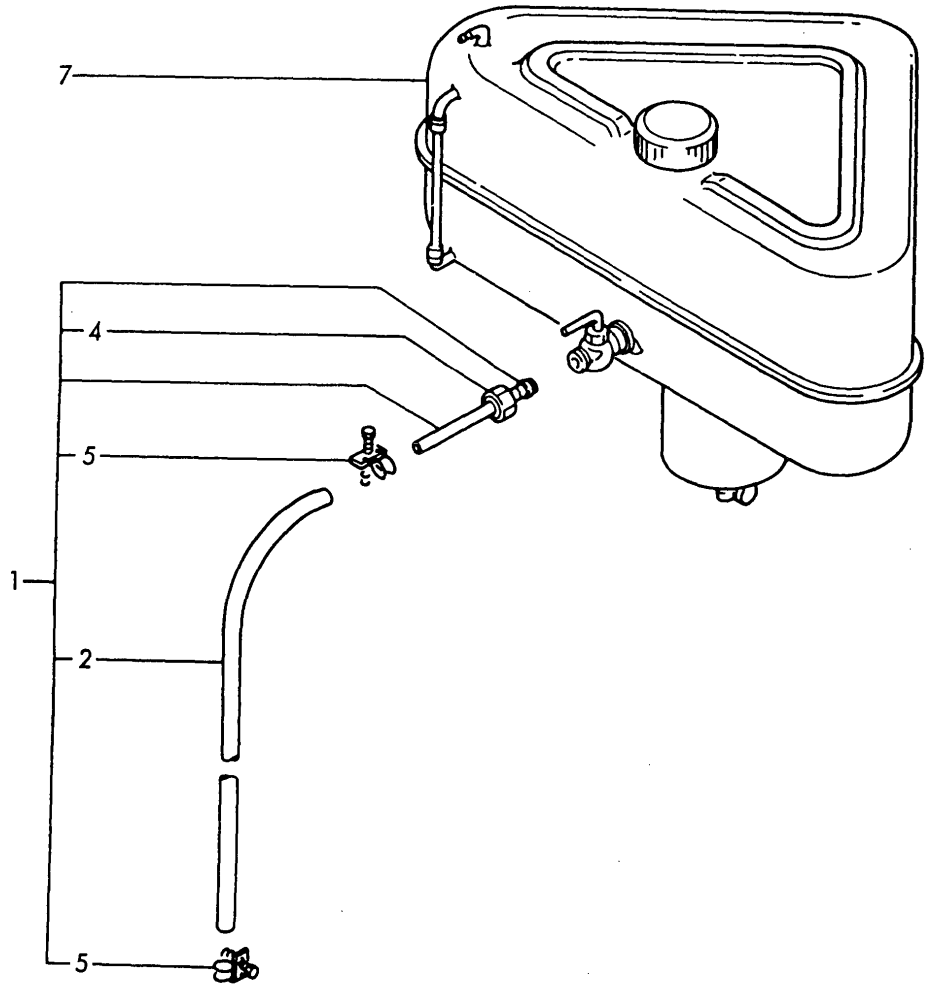

(A)=3JH2E
(B)=3JH2BE
(C)=
(D)=
(E)=
(F)=

No.	Lev.	Parts No.	Description	Q'ty (A)	(B)	(C)	(D)	(E)	(F)	I	R
1	1	124070-59060	PIPE ASSY, FUEL	1	1						
2	2	124070-59130	PIPE, FUEL 2M	1	1						
4	2	138603-59380	CAP NUT	1	1						
5	2	23010-014000	CLAMP, 14	2	2						
7	1	83213-003012	TANK (30L), FUEL	1	1						

N:Old ◄Yes/No► New, Q:Old ◄No/Yes► New, R:Old ◄Yes/Yes► New, S:Old ◄No/No► New, W:Add, Z:Discontinued, F:Interchangeable by set, K:Q'ty Change

Copyright (C) YANMAR CO., LTD. All RightsReserved.

Fig.36. ENGINE STOP DEVICE(OPTIONAL)

Fig. 36 キカンテイシソウチ(オプション) ENGINE STOP DEVICE (OPTIONAL)

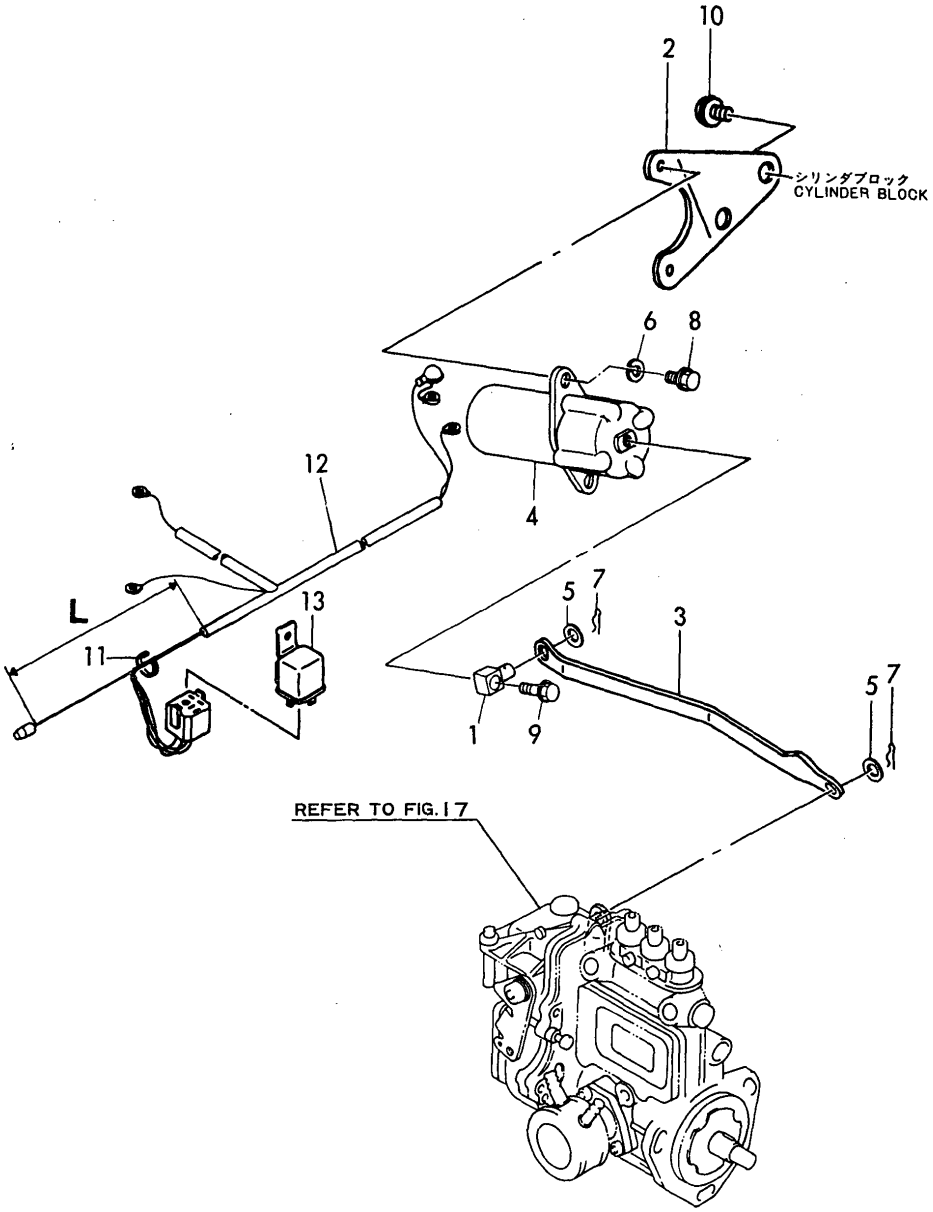

(A)=3JH2E
(B)=3JH2BE
(C)=
(D)=
(E)=
(F)=

No.	Lev.	Parts No.	Description	Q'ty (A)	(B)	(C)	(D)	(E)	(F)	I	R
1	1	171078-66551	PIN	1	1						
2	1	129171-67300	BRACKET, SOLENOID	1	1						
3	1	129171-67310	LINK	1	1						
4	1	129470-67320	SOLENOID, STOP 12V	1	1						
5	1	22117-080000	WASHER, 8	2	2						
6	1	22217-060000	WASHER, SPRING 6	2	2						
7	1	22360-080000	SNAP PIN 8	2	2						
8	1	26106-060102	BOLT, M6X 10 PLATED	2	2						
9	1	26106-060202	BOLT, M6X 20 PLATED	1	1						
10	1	26106-080122	BOLT, M8X 12 PLATED	2	2						
11	1	121750-59890	BAND, 140	1	1						
12	1	129470-77971	HARNESS, WIRE	1	1						
13	1	124617-91850	RELAY	1	1						

N:Old ←Yes/No→ New, Q:Old ←No/Yes→ New, R:Old ←Yes/Yes→ New, S:Old ←No/No→ New, W:Add, Z:Discontinued, F:Interchangeable by set, K:Q'ty Change

Copyright (C) YANMAR CO., LTD. All RightsReserved.

Fig.37. SENSOR(OPTIONAL)

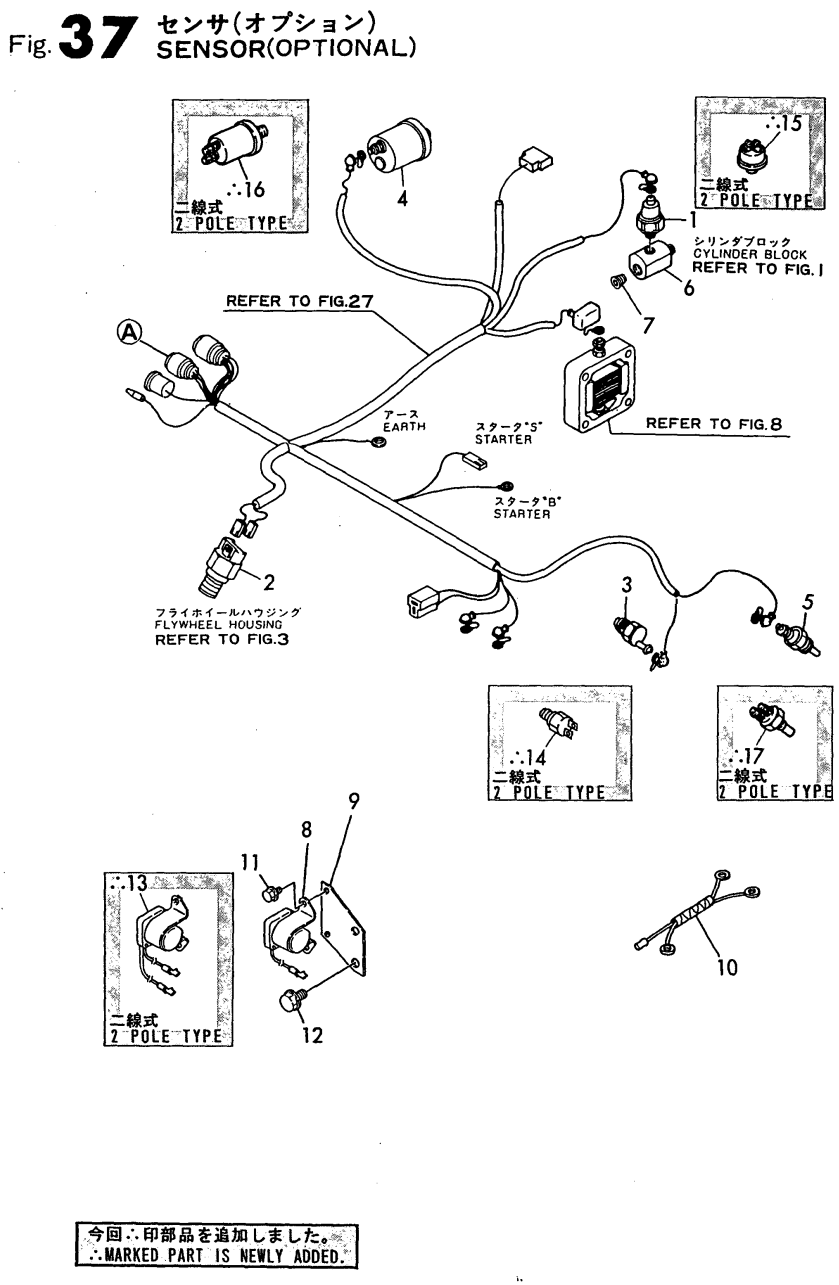

今回∴印部品を追加しました。
∴MARKED PART IS NEWLY ADDED.

Remarks
(1) 2 POLE TYPE

(A)=3JH2E (D)=
(B)=3JH2BE (E)=
(C)= (F)=

No.	Lev.	Parts No.	Description	Q'ty (A)	(B)	(C)	(D)	(E)	(F)	I	R
1	1	124060-39451	SWITCH, 0.2KG	1	1						
2	1	128170-91160	SENSOR	1	1						
3	1	120130-91370	SWITCH, 100	1	1						
4	1	144626-91560	SENSOR	1	1						
5	1	144626-91570	SENDER UNIT	1	1						
6	1	43580-500680	DAMPER ASSY, PT1/8	1	1						
7	1	23871-010000	PLUG, R01	1	1						
8	1	129100-77910	RELAY, MAGNETIC	1	1						
9	1	129573-77951	BRACKET	1	1						
10	1	129573-77960	HARNESS, WIRE	1	1						
11	1	26106-060102	BOLT, M6X 10 PLATED	2	2						
12	1	26106-100162	BOLT, M10X 16 PLATED	2	2						
13	1	129570-77920	RELAY, STARTER	1	1					W	1
	(A=E01012)	(B=E01011)									
14	1	129570-91320	SWITCH, 100	1	1					W	1
	(A=E01012)	(B=E01011)									
15	1	126630-91591	SWITCH,OIL PRESSURE	1	1					W	1
	(A=E01012)	(B=E01011)									
16	1	126630-91560	SENDER UNIT	1	1					W	1
	(A=E01012)	(B=E01011)									
17	1	126630-91570	SENDER UNIT	1	1					W	1
	(A=E01012)	(B=E01011)									

N:Old $\xleftarrow[\text{No}]{\text{Yes}}$ New, Q:Old $\xleftarrow[\text{Yes}]{\text{No}}$ New, R:Old $\xleftrightarrow[\text{Yes}]{\text{Yes}}$ New, S:Old $\xleftrightarrow[\text{No}]{\text{No}}$ New, W:Add, Z:Discontinued, F:Interchangeable by set, K:Q'ty Change

Copyright (C) YANMAR CO., LTD. All RightsReserved.

Fig.38. REMOTE CONTROL DEVICE(OPTIONAL)

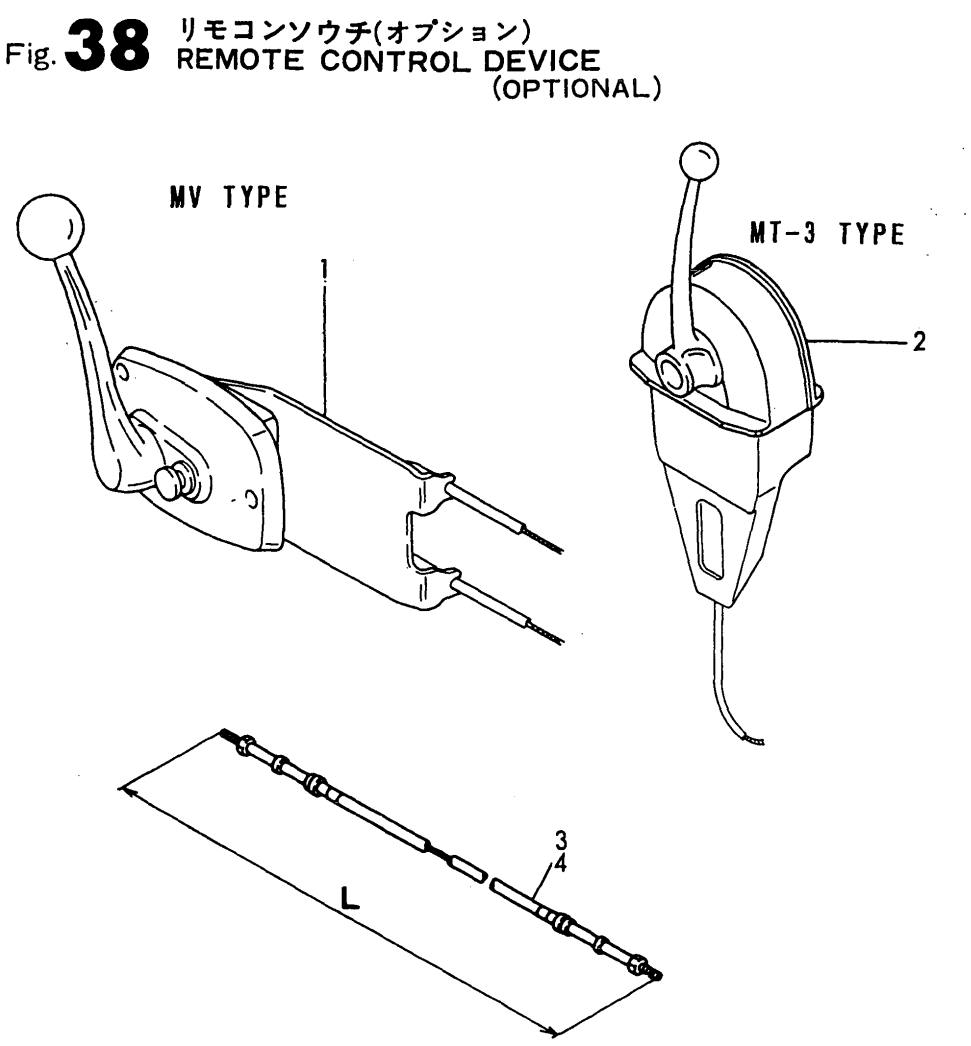

(A)=3JH2E
(B)=3JH2BE
(C)=
(D)=
(E)=
(F)=

No.	Lev.	Parts No.	Description	Q'ty (A)	(B)	(C)	(D)	(E)	(F)	I	R
1	1	128170-86500	CONTROLLER	1	1						
2	1	41730-000681	MT-3 REMO-CON	1	1						
3	1	129470-86500	CABLE, L=7000	2	2						
4	1	41710-000380	CABLE L=4000	2	2						
5	1	27720-401501	CABLE, 100X 1500	1	1						1
6	1	27720-402001	CABLE, 100X 2000	1	1						1
7	1	27720-402501	CABLE, 100X 2500	1	1						1
8	1	27720-403001	CABLE, 100X 3000	1	1						1
9	1	27720-403501	CABLE, 100X 3500	1	1						1
10	1	27720-404001	CABLE, 100X 4000	1	1						1
11	1	27720-404501	CABLE, 100X 4500	1	1						1
12	1	27720-405001	CABLE, 100X 5000	1	1						1
13	1	27720-405501	CABLE, 100X 5500	1	1						1
14	1	27720-406001	CABLE, 100X 6000	1	1						1
15	1	27720-406501	CABLE, 100X 6500	1	1						1
16	1	27720-407001	CABLE, 100X 7000	1	1						1
17	1	27720-407501	CABLE, 100X 7500	1	1						1
18	1	27720-408001	CABLE, 100X 8000	1	1						1
19	1	27720-408501	CABLE, 100X 8500	1	1						1
20	1	27720-409001	CABLE, 100X 9000	1	1						1
21	1	27720-410001	CABLE, 100X10000	1	1						1

Remarks
1) SELECT PART NO ILLUSTRATED.

N:Old $\overset{\text{Yes}}{\underset{\text{No}}{\leftrightarrows}}$ New, Q:Old $\overset{\text{No}}{\underset{\text{Yes}}{\leftrightarrows}}$ New, R:Old $\overset{\text{Yes}}{\underset{\text{Yes}}{\leftrightarrows}}$ New, S:Old $\overset{\text{No}}{\underset{\text{No}}{\leftrightarrows}}$ New, W:Add, Z:Discontinued, F:Interchangeable by set, K:Q'ty Change

Copyright (C) YANMAR CO., LTD. All RightsReserved.

Fig.39. PANEL(B TYPE)(OPTIONAL)

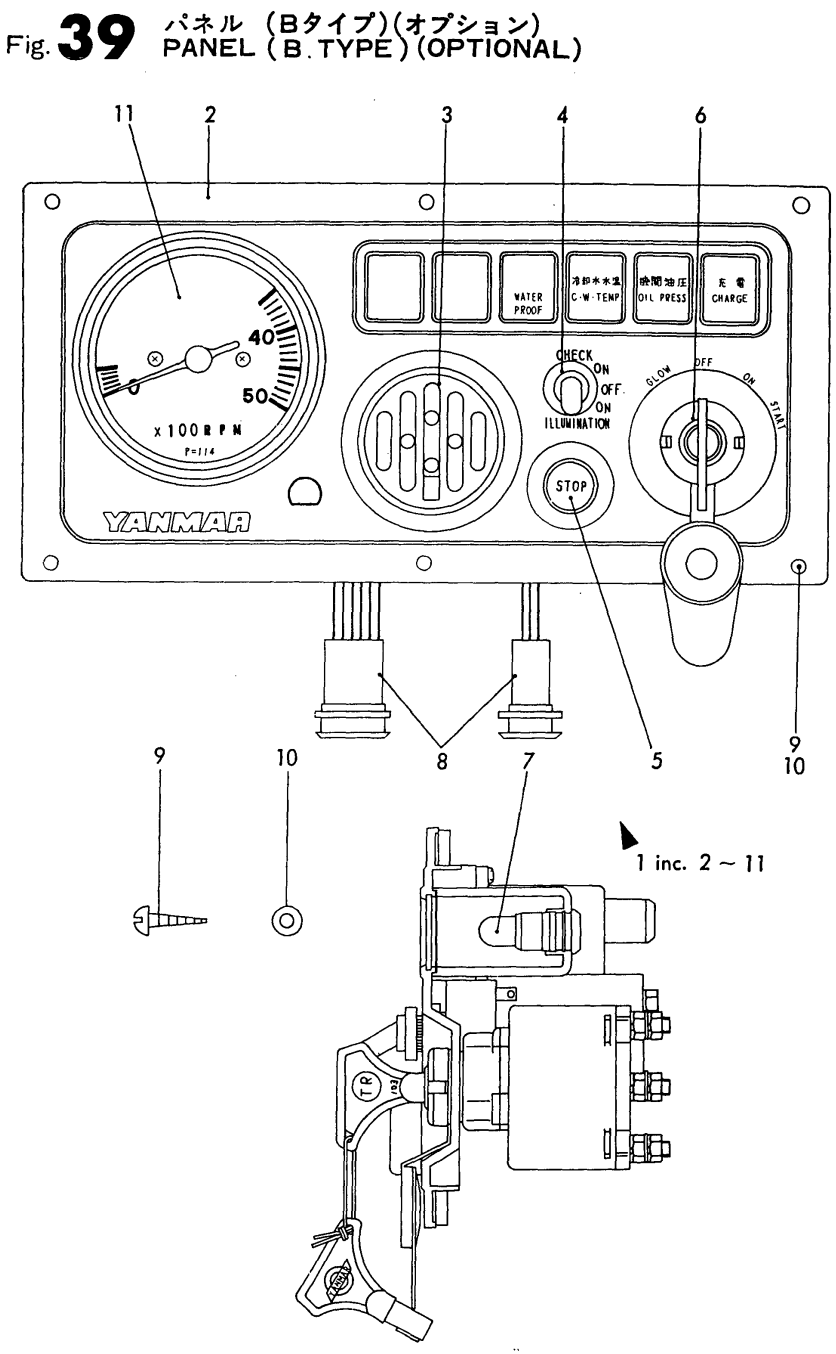

(A)=3JH2E
(B)=3JH2BE
(C)=
(D)=
(E)=
(F)=

No.	Lev.	Parts No.	Description	Q'ty (A)	(B)	(C)	(D)	(E)	(F)	I	R
1	1	129171-91191	PANEL ASSY, INSTRUM	1	1						
2	2	129495-91010	BODY, PANEL	1	1						
3	2	104271-91352	BUZZER	1	1						
4	2	128170-91310	SWITCH	1	1						
5	2	129470-91190	SWITCH, STOP	1	1						
6	2	127412-91250	SWITCH, KEY	1	1						
7	2	124617-91920	BULB, 12V-3W	4	4						
8	2	129171-91850	HARNESS, WIRE	1	1						
9	2	128170-91810	SCREW, M5X35	6	6						
10	2	128170-91820	WASHER, 5	6	6						
11	2	128670-91100	TACHOMETER	1	1						

N:Old $\overset{\text{Yes}}{\underset{\text{No}}{\leftrightarrows}}$ New, Q:Old $\overset{\text{No}}{\underset{\text{Yes}}{\leftrightarrows}}$ New, R:Old $\overset{\text{Yes}}{\underset{\text{Yes}}{\leftrightarrows}}$ New, S:Old $\overset{\text{No}}{\underset{\text{No}}{\leftrightarrows}}$ New, W:Add, Z:Discontinued, F:Interchangeable by set, K:Q'ty Change

Copyright (C) YANMAR CO., LTD. All RightsReserved.

Fig.40. PANEL(C TYPE)(OPTIONAL)

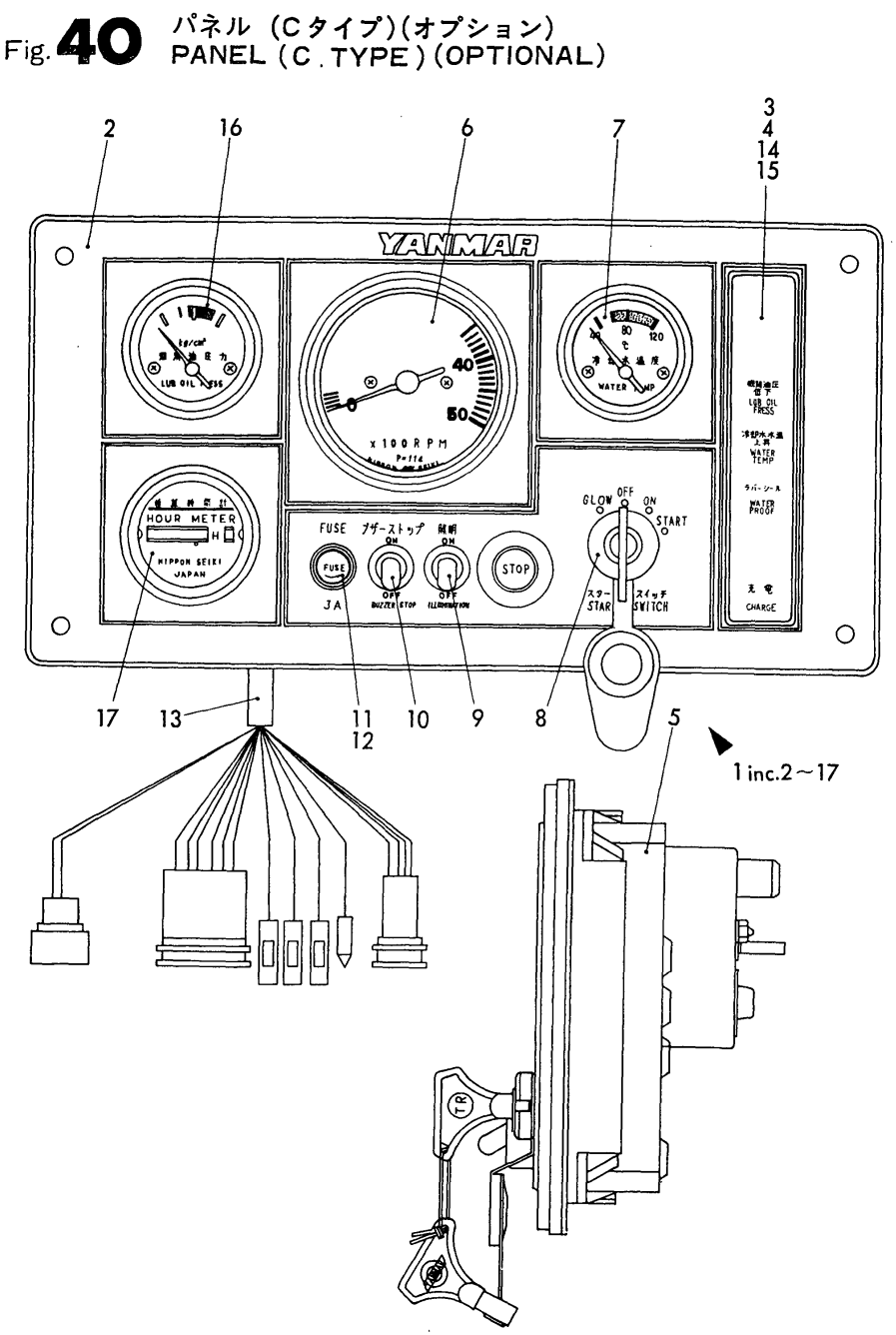

(A)=3JH2E
(B)=3JH2BE
(C)=
(D)=
(E)=
(F)=

No.	Lev.	Parts No.	Description	Q'ty (A)	(B)	(C)	(D)	(E)	(F)	I	R
1	1	129171-91171	PANEL ASSY	1	1						
2	2	129470-91180	BODY, PANEL	1	1						
3	2	129171-91600	LENS ASSY	1	1						
4	3	127410-91600	LENS	1	1						
5	2	127410-91620	BODY	1	1						
6	2	129171-91200	TACHOMETER ASSY	1	1						
7	2	124617-91840	THERMOMETER, WATER	1	1						
8	2	121575-91250	SWITCH, KEY	1	1						
9	2	127687-91790	SWITCH	1	1						
10	2	128270-91350	BUZZER, ALARM	1	1						
11	2	46150-003610	BOX(WITH OUT FUSE	1	1						
12	3	46150-003620	FUSE	1	1						
13	2	129171-91880	HARNESS,WIRE	1	1						
14	2	124617-91920	BULB, 12V-3W	1	1						
15	2	194555-55820	BULB, 12V1.7W	7	7						
16	2	129470-91160	GAUGE	1	1						
17	2	157854-04300	HOUR METER	1	1						

N:Old $\xleftarrow[\text{No}]{\text{Yes}}$ New, Q:Old $\xleftarrow[\text{Yes}]{\text{No}}$ New, R:Old $\xleftarrow[\text{Yes}]{\text{Yes}}$ New, S:Old $\xleftarrow[\text{No}]{\text{No}}$ New, W:Add, Z:Discontinued, F:Interchangeable by set, K:Q'ty Change

Copyright (C) YANMAR CO., LTD. All RightsReserved.

Fig.41. REPAIR SET(OPTIONAL)

Fig. 41 スペアパーツ(オプション) REPAIR PART (OPTIONAL)

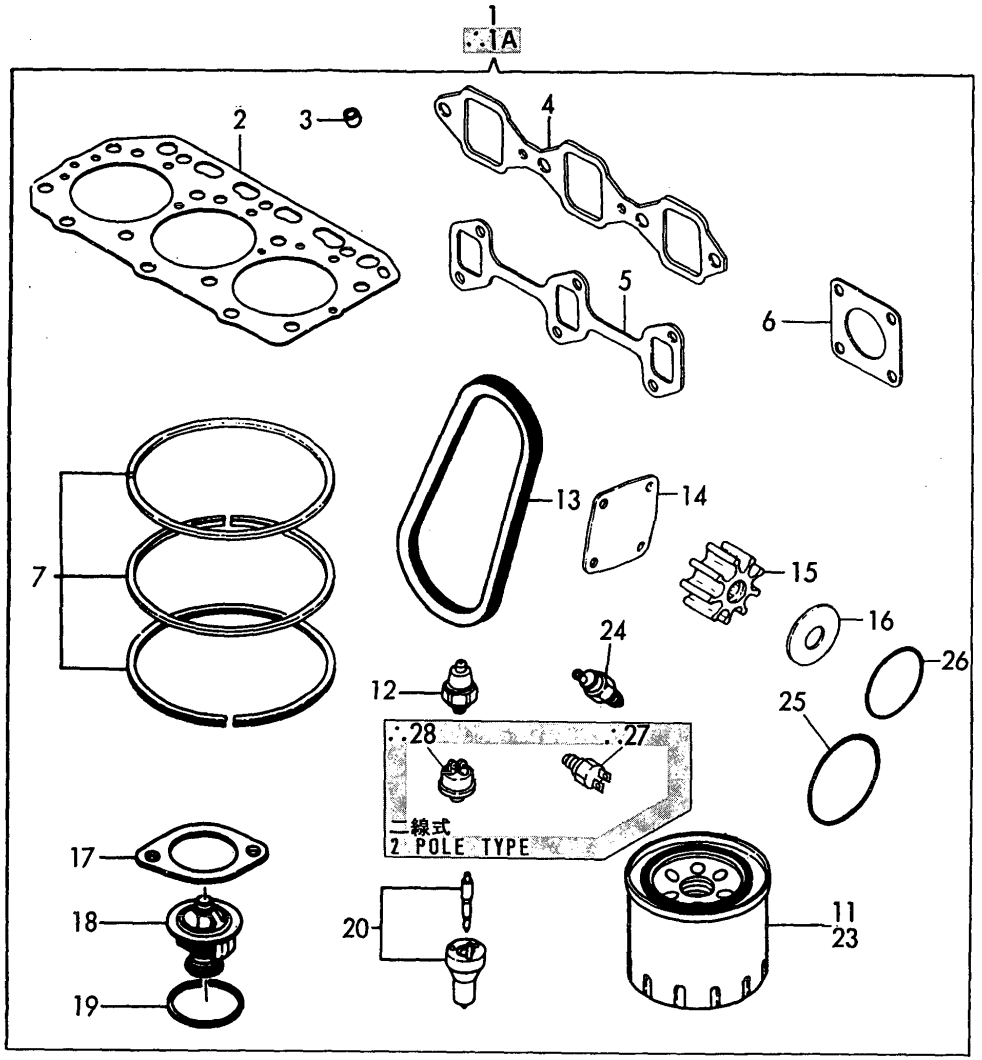

(A)=3JH2E (D)=
(B)=3JH2BE (E)=
(C)= (F)=

No.	Lev.	Parts No.	Description	Q'ty (A)	(B)	(C)	(D)	(E)	(F)	I	R
1	1	729170-92500	PARTS KIT, SPARE	1	1						
1A	1	729170-92510	REPAIR KIT	1	1					W	1
	(A=E01012)	(B=E01011)									
2	2	129171-01330	GASKET, HEAD T=1.4	1	1						
3	2	119625-11870	PROTECTOR, NOZZLE	3	3						
4	2	129150-12111	GASKET, MANIFOLD	1	1						
5	2	129150-13110	GASKET	1	1						
6	2	129472-18090	GASKET	1	1						
7	2	729120-22500	RING SET, PISTON	3	3						
11	2	119305-35150	FILTER, OIL	1	1						
12	2	124060-39451	SWITCH, 0.2KG	1	1						2
13	2	171087-42280	V-BELT, A44	1	1						
14	2	129470-42520	COVER	1	1						
15	2	129470-42530	IMPELLER	1	1						
16	2	129573-42540	PLATE	1	1						
17	2	129470-49550	GASKET	1	1						
18	2	129470-49801	THERMOSTAT, 76.5	1	1						
19	2	129470-49810	GASKET, THERMOSTAT	1	1						
20	2	129100-53000	VALVE ASSY,INJECTION	3	3						
23	2	129470-55701	STRAINER ASSY, FUEL	1	1						
24	2	120130-91370	SWITCH, 100	1	1						2
25	2	24321-000750	O-RING, 1AG75.0	2	2						
26	2	24341-000600	O-RING, 1AS60.0	1	1						
27	2	129570-91320	SWITCH, 100	1	1					W	1
	(A=E01012)	(B=E01011)									
28	2	126630-91591	SWITCH,OIL PRESSURE	1	1					W	1
	(A=E01012)	(B=E01011)									

Remarks
(1) 2POLE TYPE
(2) NOT USED FOR THE 2 POLE TYPE

N:Old $\overset{\text{Yes}}{\underset{\text{No}}{\leftrightarrows}}$ New, Q:Old $\overset{\text{No}}{\underset{\text{Yes}}{\leftrightarrows}}$ New, R:Old $\overset{\text{Yes}}{\underset{\text{Yes}}{\leftrightarrows}}$ New, S:Old $\overset{\text{No}}{\underset{\text{No}}{\leftrightarrows}}$ New, W:Add, Z:Discontinued, F:Interchangeable by set, K:Q'ty Change

Copyright (C) YANMAR CO., LTD. All RightsReserved.

Fig.42. GASKET SET(OPTIONAL)

Fig. 42 パッキンセット(オプション)
GASKET SET (OPTIONAL)

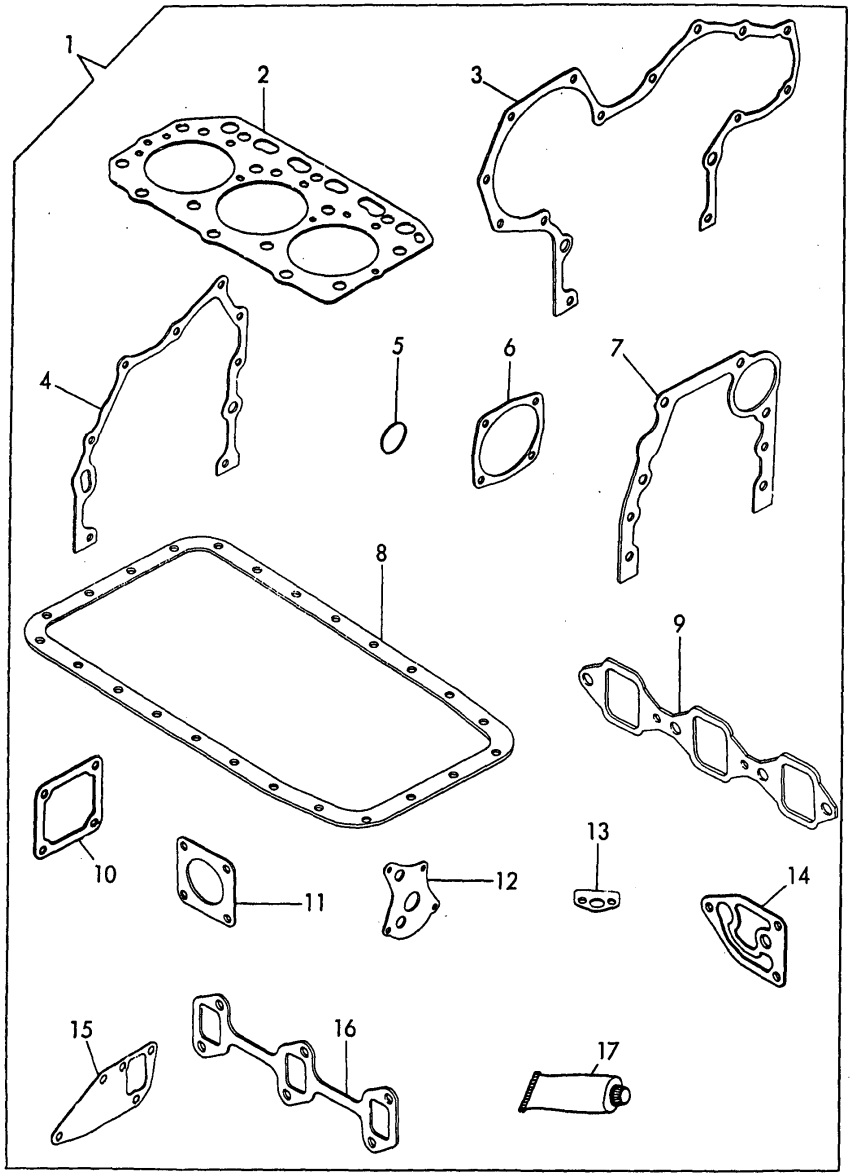

(A)=3JH2E (D)=
(B)=3JH2BE (E)=
(C)= (F)=

No.	Lev.	Parts No.	Description	Q'ty (A)	(B)	(C)	(D)	(E)	(F)	I	R
1	1	729171-92600	GASKET SET	1	1						
2	2	129171-01330	GASKET, HEAD T=1.4	1	1						
3	2	129470-01510	GASKET, GEAR CASE	1	1						
4	2	129470-01531	GASKET	1	1						
5	2	129470-01550	O-RING	1	1						
6	2	129150-01881	GASKET	2	2						
6-1	2	129C26-01890	GASKET, HO-P	1	1						R
	(A=EXXXX)	(B=EXXXXX)									
7	2	129470-01620	GASKET	1	1						
8	2	129198-01750	GASKET, OIL SUMP	1	1						
9	2	129150-12111	GASKET, MANIFOLD	1	1						
10	2	129470-77590	GASKET	1	1						
11	2	129472-18090	GASKET	1	1						
12	2	129150-32020	GASKET, PUMP	1	1						
13	2	129470-35040	GASKET	1	1						
14	2	129470-35121	GASKET	1	1						
15	2	129150-42020	GASKET, WATER PUMP	1	1						
16	2	129150-13110	GASKET	1	1						
17	2	977770-01212	GASKET, LIQUID	1	1						

N:Old $\overset{\text{Yes}}{\underset{\text{No}}{\leftrightarrows}}$ New, Q:Old $\overset{\text{No}}{\underset{\text{Yes}}{\leftrightarrows}}$ New, R:Old $\overset{\text{Yes}}{\underset{\text{Yes}}{\leftrightarrows}}$ New, S:Old $\overset{\text{No}}{\underset{\text{No}}{\leftrightarrows}}$ New, W:Add, Z:Discontinued, F:Interchangeable by set, K:Q'ty Change

Copyright (C) YANMAR CO., LTD. All RightsReserved.

Fig.43. CLUTCH HOUSING

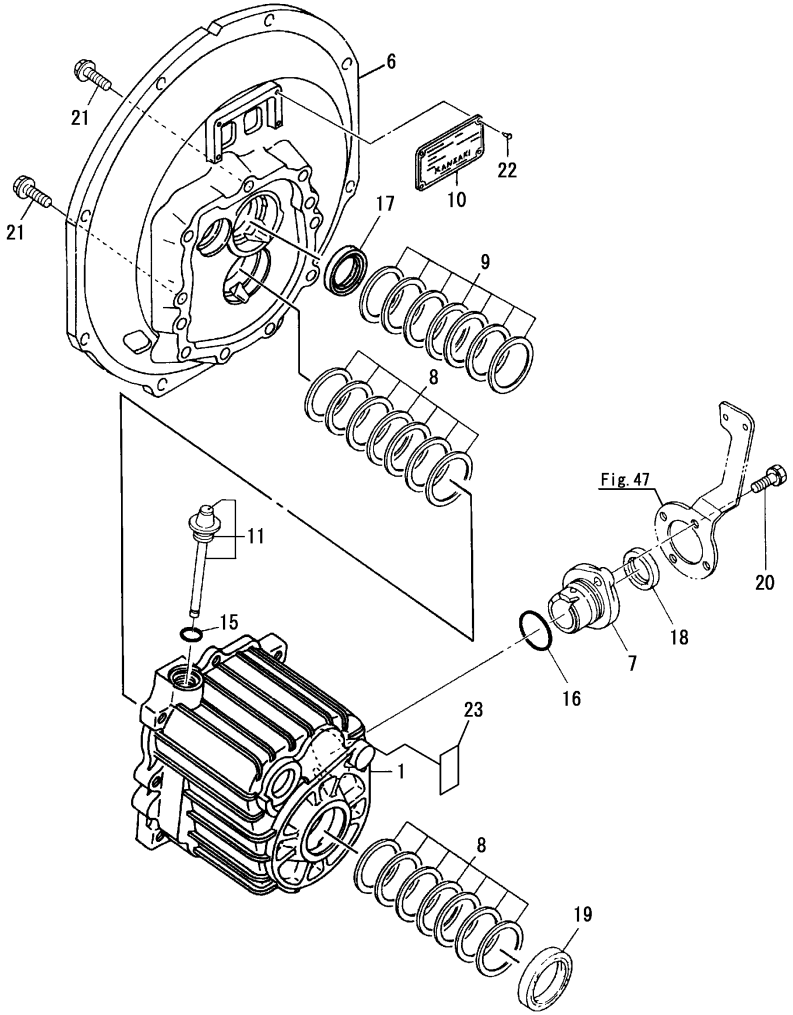

(A)=KBW10-E (D)=
(B)=KM3A (E)=
(C)= (F)=

No.	Lev.	Parts No.	Description	Q'ty (A)	(B)	(C)	(D)	(E)	(F)	I	R
1	1	777070-62100	HOUSING ASSY, CLUTCH		1						
6	1	177070-62040	FLANGE, SAE#5		1						
7	1	177070-62120	COVER		1						
7-1	1	177088-02120	COVER		1					N	
		(B=CZZZZZ)									
8	1	177088-02300	SHIM SET		1						
9	1	177088-02300	SHIM SET		1						
10	1	177088-02400	LABEL		1						
10-1	1	177088-02401	LABEL		1					N	
		(B=CZZZZZ)									
11	1	177074-02450	DIPSTICK ASSY		1						
15	1	24311-000180	O-RING, 1AP18.0		1						
16	1	24321-000400	O-RING, 1AG40.0		1						
17	1	24413-254008	SEAL, OIL SC254008		1						
18	1	24421-284008	SEAL, OIL TC284008		1						
19	1	177088-02961	SEAL MHSA34 44 8,OIL		1						
20	1	26016-080302	BOLT, M8X 30		2						
21	1	26016-080252	BOLT, M8X 25		9						
22	1	102210-07990	RIVET		4						
23	1	177088-02430	LABEL		1					W	
		(B=CZZZZZ)									

N:Old $\xleftrightarrow[\text{No}]{\text{Yes}}$ New, Q:Old $\xleftrightarrow[\text{Yes}]{\text{No}}$ New, R:Old $\xleftrightarrow[\text{Yes}]{\text{Yes}}$ New, S:Old $\xleftrightarrow[\text{No}]{\text{No}}$ New, W:Add, Z:Discontinued, F:Interchangeable by set, K:Q'ty Change

Copyright (C) YANMAR CO., LTD. All RightsReserved.

Fig.44. INPUT SHAFT & SURPORT SHAFT

Fig.44 インプットシャフト & サポートシャフト
INPUT SHAFT & SUPPORT SHAFT

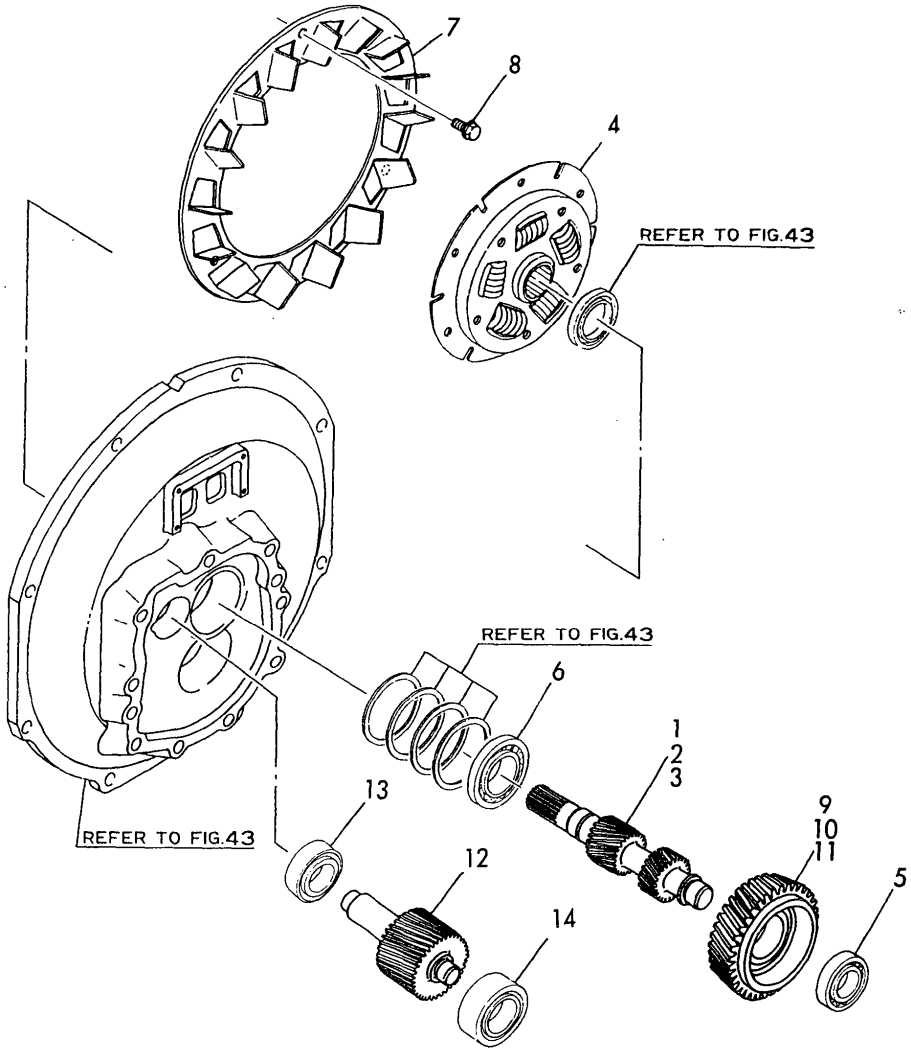

(A)=KBW10-E
(B)=KM3A
(C)=
(D)=
(E)=
(F)=

No.	Lev.	Parts No.	Description	Q'ty (A)	(B)	(C)	(D)	(E)	(F)	I	R
1	1	177070-63010	SHAFT, INPUT I=3.21		1						1
2	1	177070-63020	SHAFT, INPUT I=2.64		1						2
3	1	177070-63030	SHAFT, INPUT I=2.33		1						3
4	1	177070-03520	DISK, DAMPER D190		1						
5	1	177070-63400	BEARING, BALL		1						
6	1	24141-302050	BEARING, 30205		1						
7	1	177073-03191	FAN		1						
8	1	26106-080162	BOLT, M8X 16 PLATED		6						
9	1	177070-63110	GEAR, Z=61 I=3.21		1						1
10	1	177070-63120	GEAR, I=2.64		1						2
11	1	177070-63130	GEAR, I=2.33		1						3
12	1	177070-63300	SHAFT, 36		1						
13	1	24101-062034	BEARING, BALL 6203		1						
14	1	24101-062024	BEARING, BALL 6202		1						

Remarks
(1) FOR 3JH2GGBE
(2) FOR 3JH2GBE
(3) FOR 3JH2SBE

N:Old $\frac{\text{Yes}}{\text{No}}$ New, Q:Old $\frac{\text{No}}{\text{Yes}}$ New, R:Old $\frac{\text{Yes}}{\text{Yes}}$ New, S:Old $\frac{\text{No}}{\text{No}}$ New, W:Add, Z:Discontinued, F:Interchangeable by set, K:Q'ty Change

Copyright (C) YANMAR CO., LTD. All RightsReserved.

Fig.45. OUTPUT SHAFT

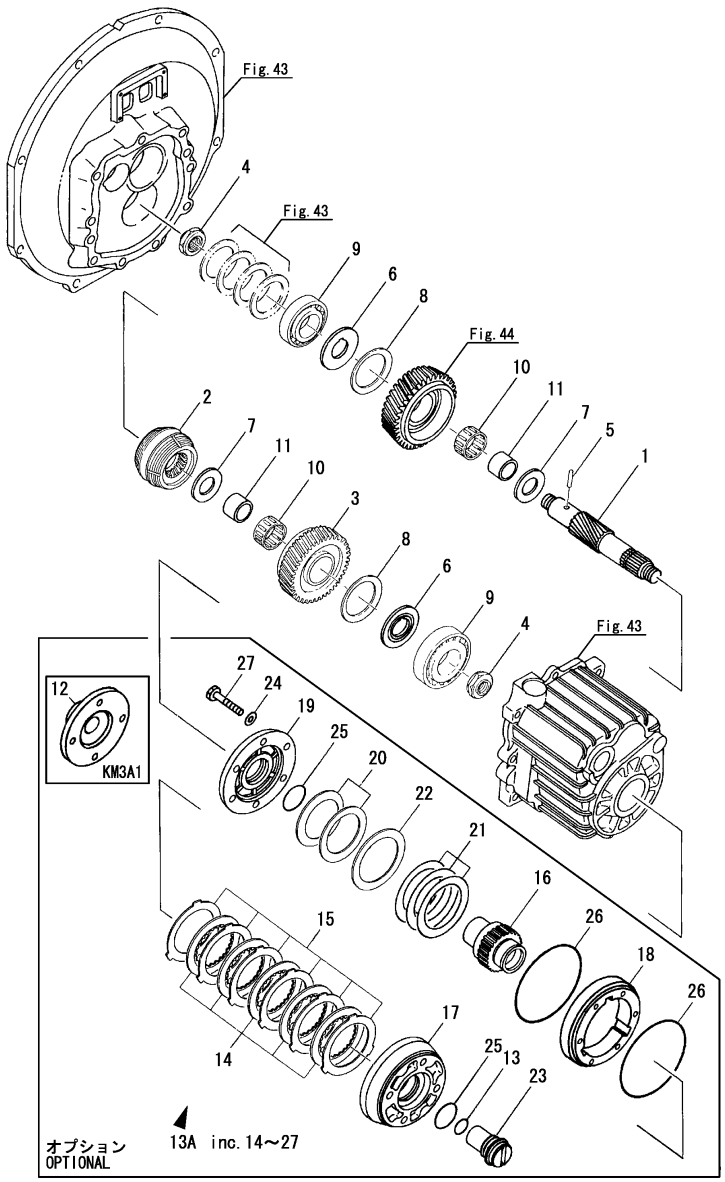

(A)=KBW10-E (D)=
(B)=KM3A (E)=
(C)= (F)=

No.	Lev.	Parts No.	Description	Q'ty (A)	(B)	(C)	(D)	(E)	(F)	I	R
1	1	177070-63040	SHAFT, CLUTCH		1						
2	1	177073-03170	CONE, DRIVE		1						
3	1	177070-63150	GEAR, Z=70		1						
4	1	177088-03272	NUT		2						
5	1	177088-03290	PIN		1						
6	1	177070-63230	COLLAR, THRUST		2						
7	1	177070-63250	COLLAR, THRUST		2						
8	1	177088-03540	SPRING		2						
9	1	24141-302050	BEARING, 30205		2						
10	1	177070-03200	NEEDLE BEARING		2						
10-1	1	24161-303520	BEARING, 303520		2					R	
		(B=CZZZZZ)									
11	1	177070-03190	RACE, BEARING		2						
12	1	177070-03550	COUPLING		1						1
13	1	24311-000210	O-RING, 1AP21.0		1						2
13A	1	177070-03640	LIMITER ASSY, TORQUE		1					W	2
		(B=CZZZZZ)									
14	2	177040-03080	DISK, FRICTION		5						
14-1	2	177040-03081	DISK, FRICTION		5					N	
		(B=CZZZZZ)									
15	2	177090-03090	PLATE, STEEL		6						
16	2	177070-03651	HOLDER		1						
17	2	177070-03660	COUPLING		1						
18	2	177070-03670	HOUSING		1						
19	2	177070-03681	COVER, HOUSING		1						
20	2	177070-03691	SPRING		2						
21	2	177070-03700	SHIM SET		1						
22	2	177070-03741	SPACER		1						
23	2	177070-03750	NUT, LOCK		1						
24	2	22190-080000	WASHER, SEAL 8		6						
25	2	24311-000340	O-RING, 1AP34.0		2						
26	2	24341-001050	O-RING, 1AS105.0		2						
27	2	26106-080452	BOLT, M8X 45 PLATED		6						

Remarks
(1)Parts of KM3A1
(2)optional

N:Old $\overset{\text{Yes}}{\underset{\text{No}}{\leftrightarrows}}$ New, Q:Old $\overset{\text{No}}{\underset{\text{Yes}}{\leftrightarrows}}$ New, R:Old $\overset{\text{Yes}}{\underset{\text{Yes}}{\leftrightarrows}}$ New, S:Old $\overset{\text{No}}{\underset{\text{No}}{\leftrightarrows}}$ New, W:Add, Z:Discontinued, F:Interchangeable by set, K:Q'ty Change

Copyright (C) YANMAR CO., LTD. All RightsReserved.

Fig.46. REMOTE CONTROL DEVICE

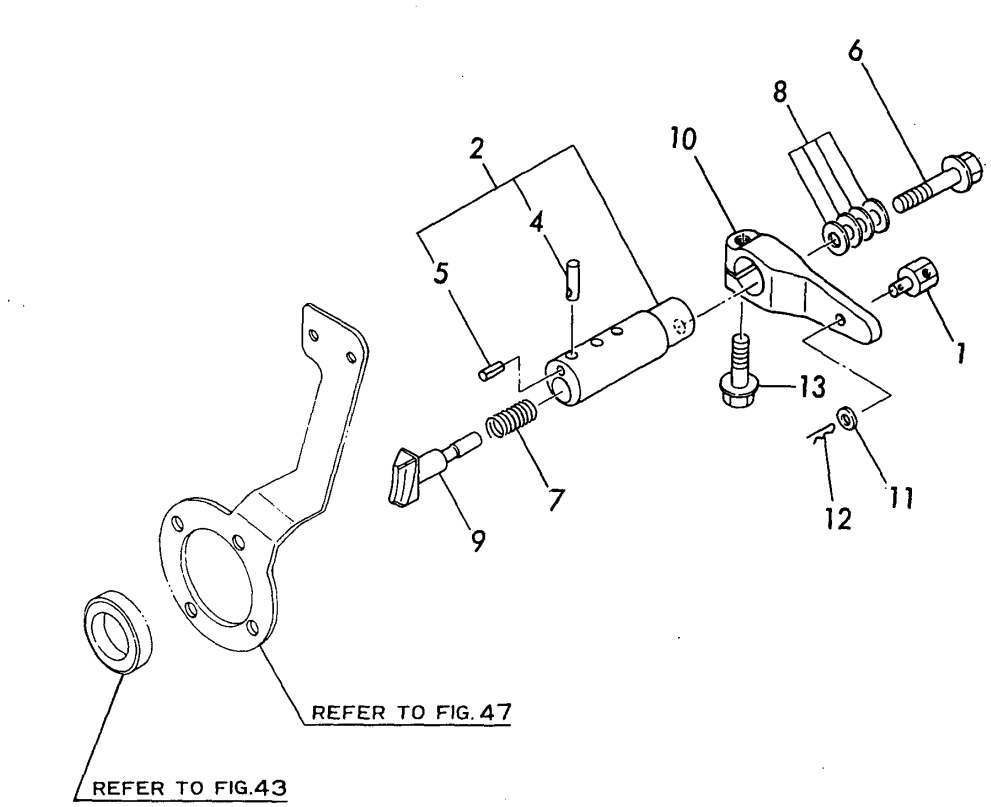

(A)= (D)=
(B)=KM3A (E)=
(C)= (F)=

No.	Lev.	Parts No.	Description	Q'ty (A)	(B)	(C)	(D)	(E)	(F)	I	R
1	1	177073-06200	PIVOT		1						
1-1	1	177073-06210	PIVOT		1					S	
		(B=CZZZZZ)									
2	1	177088-06340	SHAFT ASSY		1						
4	2	196322-06610	PIN, PARALLEL 5X18		1						
5	2	22351-020012	PIN, SPRING 2.0X12		1						
6	1	177088-06360	BOLT		1						
7	1	177088-06370	SPRING		1						
8	1	177088-06380	SHIM SET		1						
9	1	177088-06390	SHIFTER		1						
10	1	177088-06400	LEVER		1						
11	1	22137-060000	WASHER, 6		1						
12	1	22417-200120	COTTER PIN 2.0X12		1						
12-1	1	22417-250200	PIN, COTTER 2.5X20		1					S	
		(B=CZZZZZ)									
13	1	26106-080252	BOLT, M8X 25 PLATED		1						

N:Old $\xleftarrow[\text{No}]{\text{Yes}}$ New, Q:Old $\xleftarrow[\text{Yes}]{\text{No}}$ New, R:Old $\xleftarrow[\text{Yes}]{\text{Yes}}$ New, S:Old $\xleftarrow[\text{No}]{\text{No}}$ New, W:Add, Z:Discontinued, F:Interchangeable by set, K:Q'ty Change

Copyright (C) YANMAR CO., LTD. All RightsReserved.

Fig.47. REMOTE CONTROL PASSIVE UNIT

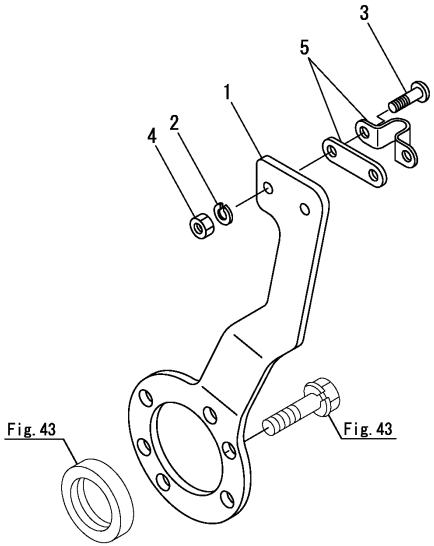

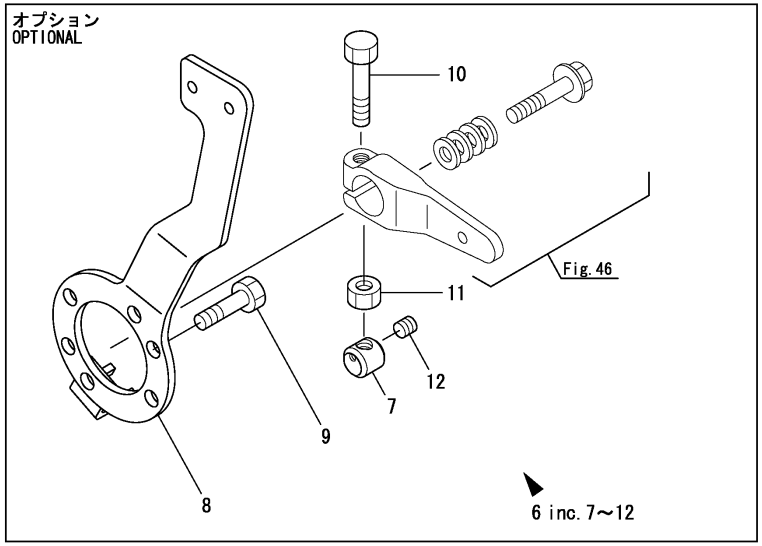

(A)=KBW10-E (D)=
(B)=KM3A (E)=
(C)= (F)=

No.	Lev.	Parts No.	Description	Q'ty (A)	(B)	(C)	(D)	(E)	(F)	I	R
1	1	177073-06600	STAY		1						
2	1	22217-050000	WASHER, SPRING 5		2						
2-1	1	22212-050000	WASHER 5		2						R
		(B=CZZZZZ)									
3	1	26557-050162	SCREW, M5X16		2						
4	1	26716-050002	NUT, M5		2						
5	1	41710-000410	CLAMP		1						
6	1	177070-66590	STAY ASSY, SWITCH		1						W
		(B=CZZZZZ)									
7	2	177074-06300	CONTACT		1						W
		(B=CZZZZZ)									
8	2	177070-66600	STAY		1						W
		(B=CZZZZZ)									
9	2	26116-080302	BOLT, M8X 30 PLATED		2						W
		(B=CZZZZZ)									
10	2	26116-080404	BOLT, M8X 40 PLATED		1						W
		(B=CZZZZZ)									
11	2	26716-080002	NUT, M8		1						W
		(B=CZZZZZ)									
12	2	26979-040082	SCREW, M4X 8		1						W
		(B=CZZZZZ)									

N:Old ◄Yes/No► New, Q:Old ◄No/Yes► New, R:Old ◄Yes/Yes► New, S:Old ◄No/No► New, W:Add, Z:Discontinued, F:Interchangeable by set, K:Q'ty Change

Copyright (C) YANMAR CO., LTD. All RightsReserved.

Fig.48. CLUTCH HOUSING

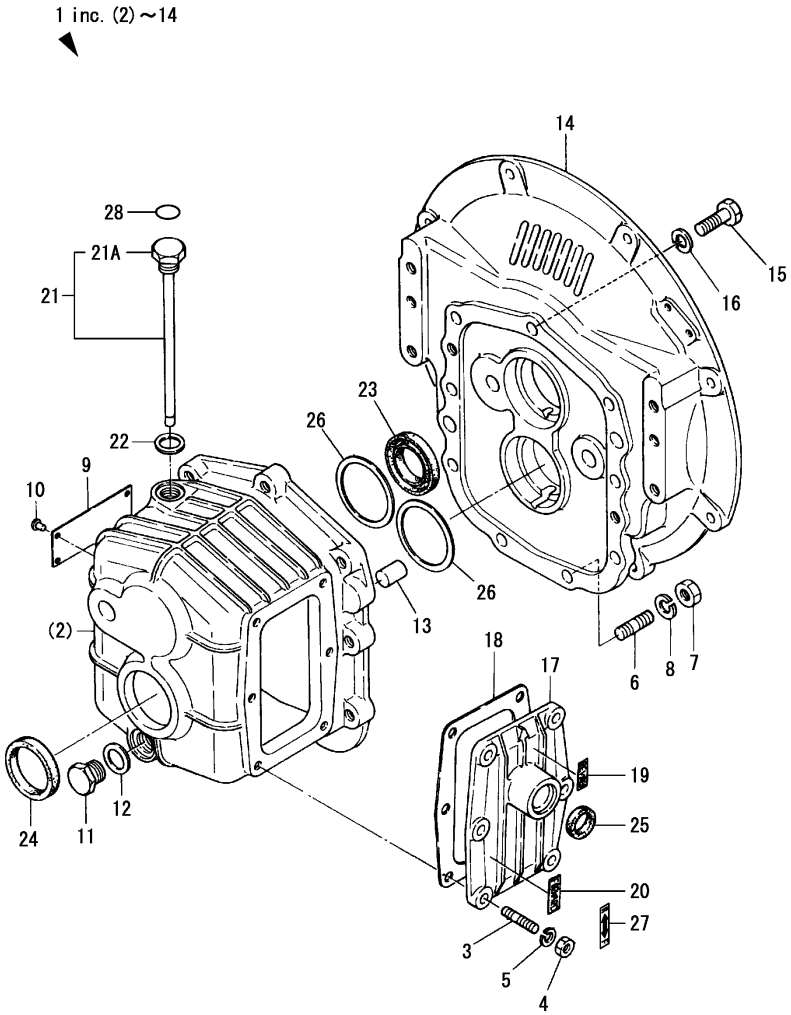

(A)=KBW10-E (D)=
(B)=KM3A (E)=
(C)= (F)=

No.	Lev.	Parts No.	Description	Q'ty (A)	(B)	(C)	(D)	(E)	(F)	I	R
1	1	777099-02550	HOUSING ASSY, CLUTCH	1							
3	2	26216-080222	STUD, M8X 22	6							
4	2	26716-080002	NUT, M8	6							
5	2	22287-080000	WASHER, 8	6							
6	2	26223-100222	STUD, M10X 22	4							
7	2	26703-100002	NUT, M10	4							
8	2	22133-100000	WASHER, 10	4							
9	2	177099-02421	LABEL	1							
9-1	2	177099-02422	LABEL	1						N	
	(A=CZZZZZ)										
10	2	102210-07990	RIVET	4							
11	2	23887-160002	PLUG, 16	1							
12	2	23414-160021	GASKET, 16X1.0	1							
13	2	177099-02130	PIN, PARALLEL	2							
14	2	177080-02030	FLANGE, MOUNTING	1							
15	1	26116-100302	BOLT, M10X 30 PLATED	9							
16	1	22287-100000	WASHER, 10	5							
17	1	177099-02081	COVER	1							
18	1	177099-02091	GASKET	1							
19	1	177090-02630	LABEL	1						Z	
	(A=CZZZZZ)										
20	1	177090-02620	LABEL	1						Z	
	(A=CZZZZZ)										
21	1	177099-02450	DIPSTICK	1							
21A	2	177099-02470	COVER	1							
22	1	23414-160021	GASKET, 16X1.0	1							
23	1	177099-02950	SEAL TC30 52 8, OIL	1							
24	1	177099-02960	SEAL TC40 52 8, OIL	1							
24-1	1	24421-405208	SEAL, OIL TC405208	1						R	
	(A=CZZZZZ)										
25	1	177095-02980	SEAL, OIL	1							
26	1	177099-02250	SHIM SET	2							
27	1	177088-02430	LABEL	1						W	
	(A=CZZZZZ)										
28	1	177075-02550	LABEL	1						W	
	(A=CZZZZZ)										
28-1	1	177075-02551	LABEL, OIL	1						N	
	(A=CZZZZZ)										

N:Old $\xleftrightarrow[\text{No}]{\text{Yes}}$ New, Q:Old $\xleftrightarrow[\text{Yes}]{\text{No}}$ New, R:Old $\xleftrightarrow[\text{Yes}]{\text{Yes}}$ New, S:Old $\xleftrightarrow[\text{No}]{\text{No}}$ New, W:Add, Z:Discontinued, F:Interchangeable by set, K:Q'ty Change

Copyright (C) YANMAR CO., LTD. All RightsReserved.

Fig.49. INPUT SHAFT & SURPORT SHAFT

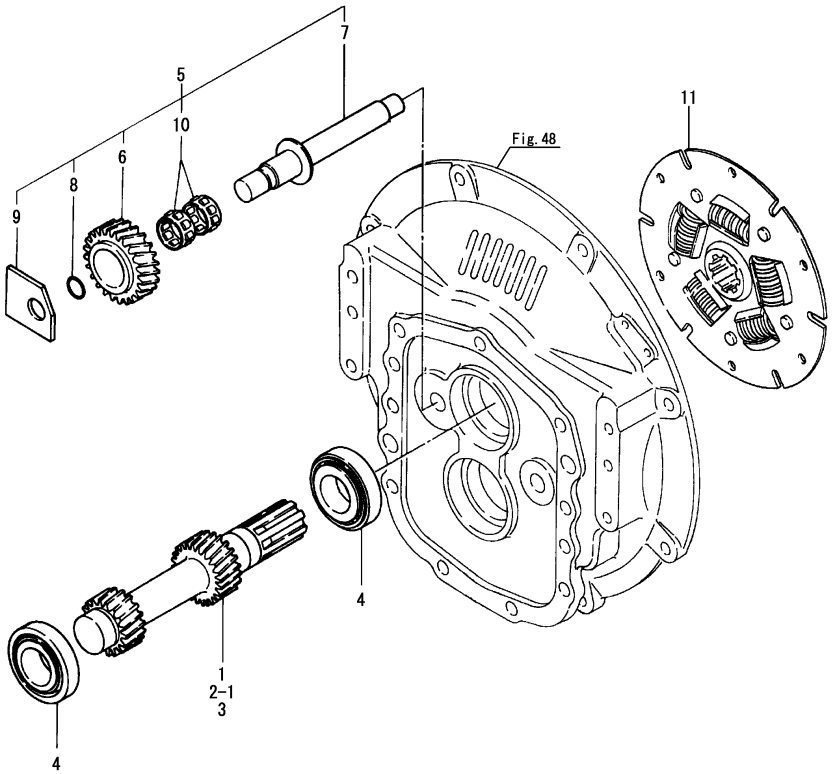

(A)=KBW10-E
(B)=KM3A
(C)=
(D)=
(E)=
(F)=

No.	Lev.	Parts No.	Description	Q'ty (A)	(B)	(C)	(D)	(E)	(F)	I	R
1	1	177099-03411	SHAFT, INPUT I=2.83	1							1
2-1	1	177099-03360	SHAFT, INPUT I=2.45	1							2
3	1	177099-03011	SHAFT, INPUT I=2.14	1							3
4	1	177099-03920	ROLLER BEARING	2							
5	1	777099-03021	SHAFT ASSY	1							
6	2	177099-03301	GEAR, IDLE Z=25	1							
7	2	177099-03980	SHAFT, GEAR	1							
8	2	24341-000150	O-RING, 1AS15.0	1							
9	2	177099-03321	WASHER	1							
10	2	177099-03901	NEEDLE BEARING	2							
11	1	177099-03500	DISK, DAMPER	1							

Remarks
(1)FOR 3JH2GGE
(2)FOR 3JH2GE
(3)FOR 3JH2SE

N:Old $\xleftrightarrow[\text{No}]{\text{Yes}}$ New, Q:Old $\xleftrightarrow[\text{Yes}]{\text{No}}$ New, R:Old $\xleftrightarrow[\text{Yes}]{\text{Yes}}$ New, S:Old $\xleftrightarrow[\text{No}]{\text{No}}$ New, W:Add, Z:Discontinued, F:Interchangeable by set, K:Q'ty Change

Copyright (C) YANMAR CO., LTD. All RightsReserved.

Fig.50. OUTPUT SHAFT

Fig.50 アウトプットシャフト OUTPUT SHAFT

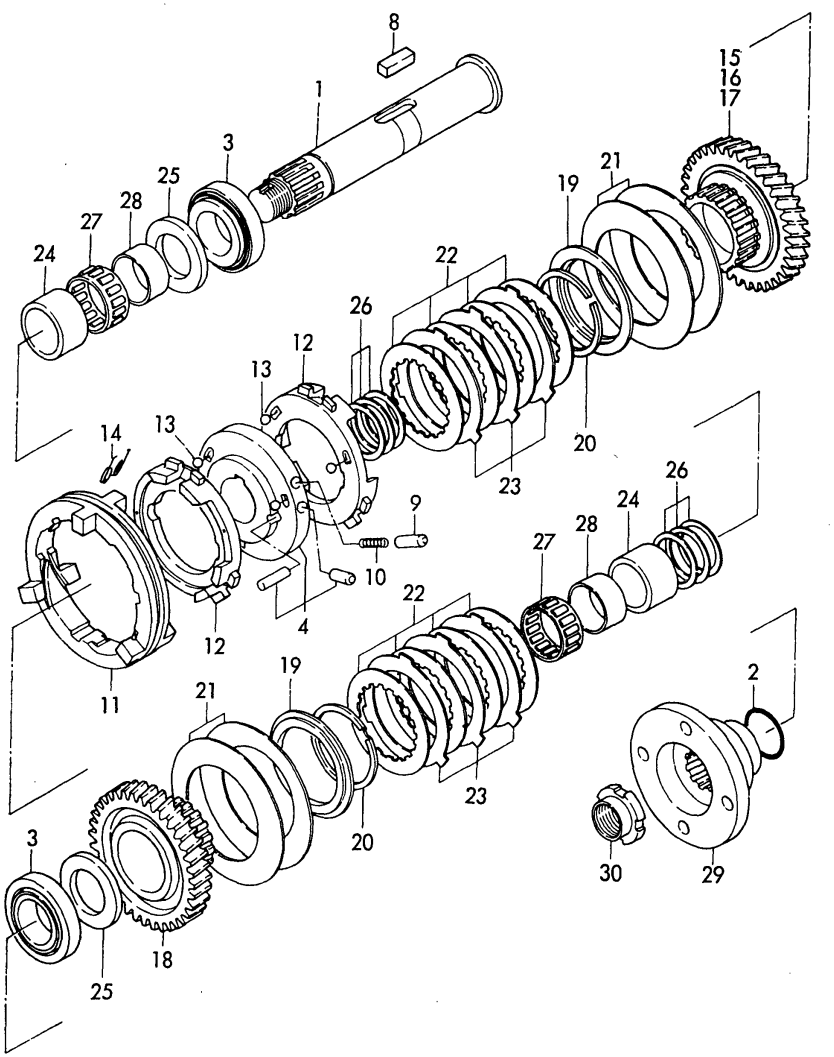

(A)=KBW10-E (D)=
(B)=KM3A (E)=
(C)= (F)=

No.	Lev.	Parts No.	Description	Q'ty (A)	(B)	(C)	(D)	(E)	(F)	I	R
1	1	177099-03021	SHAFT, OUTPUT	1							
2	1	24341-000300	O-RING, 1AS30.0	1							
3	1	177099-03920	ROLLER BEARING	2							
4	1	177099-03040	PLATE ASSY, DRIVE	1							
8	1	177090-03230	KEY	1							
9	1	177095-03190	PIN	3							
10	1	177095-03200	SPRING	3							
11	1	177099-03070	RING, SHIFT	1							
12	1	177099-03080	PLATE, PRESSURE	2							
13	1	177090-03180	BALL, STEEL	6							
14	1	177095-03210	SPRING	3							
15	1	177099-03431	GEAR, Z=51 I=2.83	1							1
16	1	177099-03370	GEAR, Z=49 I=2.45	1							2
17	1	177099-03101	GEAR, Z=47 I=2.14	1							3
18	1	177099-03111	GEAR, Z=45	1							
19	1	177090-03110	RETAINER	2							
20	1	177095-03280	CIRCLIP	2							
21	1	177090-03121	SPRING	2							
22	1	177090-03080	DISK, D78 T1.7	8							
23	1	177090-03090	PLATE, STEEL	6							
24	1	177099-03161	SPACER	2							
25	1	177090-03270	COLLAR, THRUST	2							
26	1	177095-03800	SHIM SET	2							
27	1	177095-03900	ROLLER BEARING	2							
28	1	177099-03470	RACE, INNER	2							
29	1	177099-03550	COUPLING	1							
30	1	177099-03540	NUT, LOCK	1							

Remarks
(1) FOR 3JH2GGE
(2) FOR 3JH2GE
(3) FOR 3JH2SE

N:Old $\xleftrightarrow[\text{No}]{\text{Yes}}$ New, Q:Old $\xleftrightarrow[\text{Yes}]{\text{No}}$ New, R:Old $\xleftrightarrow[\text{Yes}]{\text{Yes}}$ New, S:Old $\xleftrightarrow[\text{No}]{\text{No}}$ New, W:Add, Z:Discontinued, F:Interchangeable by set, K:Q'ty Change

Copyright (C) YANMAR CO., LTD. All RightsReserved.

Fig.51. REMOTE CONTROL DEVICE

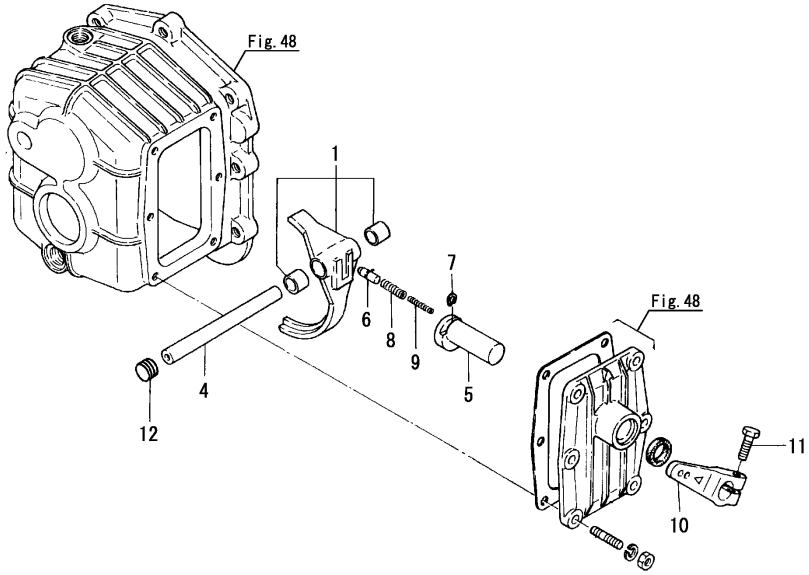

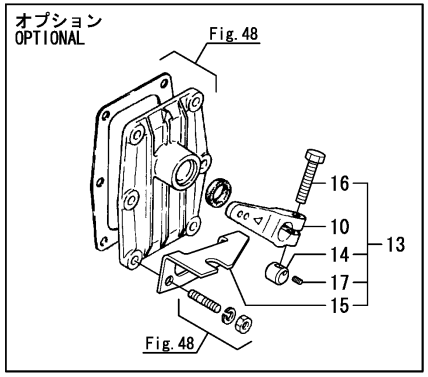

(A)=KBW10-E (D)=
(B)=KM3A (E)=
(C)= (F)=

No.	Lev.	Parts No.	Description	Q'ty (A)	(B)	(C)	(D)	(E)	(F)	I	R
1	1	177099-06010	FORK ASSY	1							
4	1	177099-06041	SHAFT, SHIFT	1							
5	1	177095-06030	CAM, SHIFT	1							
6	1	177095-06050	PIN	1							
7	1	177095-06140	CIRCLIP	1							
8	1	177095-03200	SPRING	1							
9	1	177095-06060	SPRING	1							
10	1	177095-06040	LEVER	1							
10-1	1	177095-06041	LEVER	1						R	
	(A=CZZZZZ)										
11	1	26116-080252	BOLT, M8X 25 PLATED	1							
12	1	177099-06050	PLUG	1							
13	1	177084-06340	STAY ASSY, SWITCH	1						W	
	(A=CZZZZZ)										
14	2	177074-06300	CONTACT	1						W	
	(A=CZZZZZ)										
15	2	177084-06350	STAY, SWITCH	1						W	
	(A=CZZZZZ)										
16	2	26116-080404	BOLT, M8X 40 PLATED	1						W	
	(A=CZZZZZ)										
17	2	26979-040082	SCREW, M4X 8	1						W	
	(A=CZZZZZ)										

N:Old $\overset{\text{Yes}}{\underset{\text{No}}{\leftrightarrows}}$ New, Q:Old $\overset{\text{No}}{\underset{\text{Yes}}{\leftrightarrows}}$ New, R:Old $\overset{\text{Yes}}{\underset{\text{Yes}}{\leftrightarrows}}$ New, S:Old $\overset{\text{No}}{\underset{\text{No}}{\leftrightarrows}}$ New, W:Add, Z:Discontinued, F:Interchangeable by set, K:Q'ty Change

Copyright (C) YANMAR CO., LTD. All RightsReserved.

Fig.52. TOOL(OPTIONAL)

Fig. 52 コウグ(オプション) TOOL (OPTIONAL)

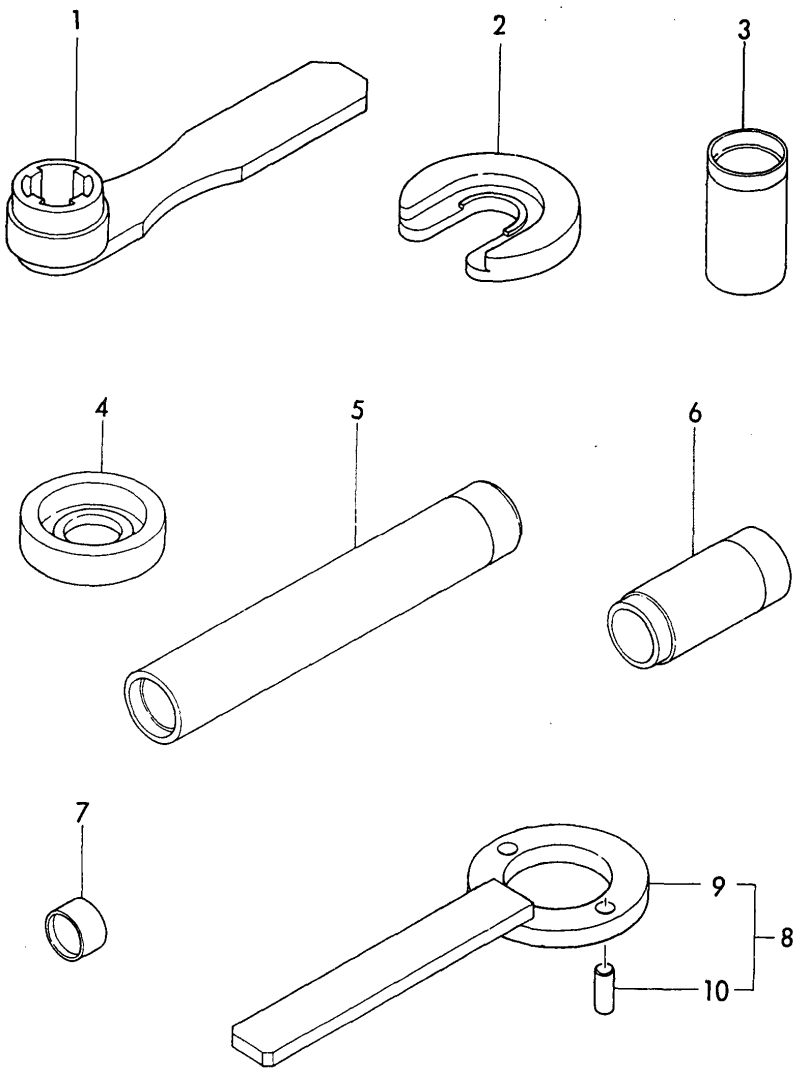

(A)=KBW10-E (D)=
(B)=KM3A (E)=
(C)= (F)=

No.	Lev.	Parts No.	Description	Q'ty (A)	(B)	(C)	(D)	(E)	(F)	I	R
1	1	177099-09010	WRENCH	1							
2	1	177099-09030	RETAINER	1							
3	1	177095-09070	SPRING	1							
4	1	177090-09010	SPACER	1							
5	1	177095-09020	TOOL, REPLACER	1							
6	1	177099-09040	PIPE	1							
7	1	177095-09170	TOOL, REPLACER	1							
8	1	177099-09080	STOPPER ASSY	1							
9	2	177099-09020	WRENCH	1							
10	2	22312-100200	PIN, PARALLEL M10X20	2							

N:Old ←Yes/No→ New, Q:Old ←No/Yes→ New, R:Old ←Yes/Yes→ New, S:Old ←No/No→ New, W:Add, Z:Discontinued, F:Interchangeable by set, K:Q'ty Change

Copyright (C) YANMAR CO., LTD. All RightsReserved.

Parts No. Index

Parts No.	Fig. No.	Ref. No.
101304-59020	21	1
		9
102210-07990	4	5
	43	22
	48	10
103338-11190	6	18
104200-59170	21	4
104200-92350	28	2
104200-92600	28	3
104211-21600	10	12
104214-39720	11	9
104214-83980	29	24
104271-91352	39	3
104407-44480	16	5
104511-11370	6	21
105583-85900	29	25
114250-53080	19	6
114250-53120	19	10
114250-53130	19	11
114250-53140	19	12
114250-53210	19	13
114250-53400	19	14
119000-59550	21	14
119171-14400	9	8
119171-77701	27	7
119171-77980	27	9
119305-35150	11	36
	41	11
119600-01050	1	4
119600-66840	22	60
119620-54900	20	10
119625-11870	6	24
	41	3
119625-11880	6	26
119625-11900	6	25
120130-11860	6	45
120130-49350	16	18
120130-91370	37	3
	41	24
120445-44530	16	31
120445-44540	16	32
120445-44640	16	17
121023-01550	2	5
121100-22400	10	23
121111-21501	10	9
121370-08351	5	8
121400-11340	6	19
121450-01560	2	7
121550-23200	10	27
121575-91250	40	8

Parts No.	Fig. No.	Ref. No.
121750-59890	21	5
	36	11
121850-11860	6	9
121850-21680	10	8
121850-35200	11	30
121850-35520	11	32
121850-35531	11	33
121850-54900	20	16
122117-51560	17	45
122710-51050	17	5
122710-51090	17	8
123310-77640	25	35
123325-49490	31	5
123682-07850	4	4
124060-39451	37	1
	41	12
124066-59100	21	10
124070-59060	35	1
124070-59130	35	2
124070-77950	27	3
		19
124080-77520	30	20
124160-01751	2	8
	7	9
124160-11360	7	11
124160-39140	13	1
124160-49480	16	6
124223-35510	11	31
124310-54800	20	9
124410-54940	20	20
124460-11340	6	20
124460-77680	1	26
	14	24
124550-51350	17	30
124550-51370	17	31
124550-59820	13	9
124550-66370	22	59
124550-77030	25	33
124617-91840	40	7
124617-91850	27	10
	36	13
124617-91920	39	7
	40	14
124770-77940	27	2
		18
124772-08341	5	7
124790-44560	16	33
124950-51190	17	15
126630-07370	4	3
126630-91560	37	16

Parts No.	Fig. No.	Ref. No.
126630-91570	37	17
126630-91591	37	15
	41	28
127410-91600	40	4
127410-91620	40	5
127412-91250	39	6
127610-03150	6	44
	14	29
127610-77710	27	8
127687-91790	40	9
128170-13600	16	22
128170-86500	38	1
128170-91160	37	2
128170-91310	39	4
128170-91810	39	9
128170-91820	39	10
128270-91350	40	10
128371-01800	1	25
128670-81010	29	3
128670-81020	29	6
128670-91100	39	11
128695-44090	14	20
	15	17
129100-01520	2	3
129100-11100	6	14
129100-11110	6	15
129100-23910	10	43
129100-35140	11	29
129100-51570	17	45 -1
129100-53000	19	3
	41	20
129100-59810	19	26
129100-59820	19	30
129100-59830	19	34
129100-59951	21	17
129100-61400	22	16
129100-61730	22	80
129100-61821	22	56
129100-61930	22	81
129100-77500	8	13
129100-77510	8	14
129100-77910	37	8
129107-44590	16	16
129129-14580	9	1
129150-01200	1	23
129150-01750	3	7 -1
129150-01881	7	16
	14	17
	42	6
129150-02020	1	11

Parts No.	Fig. No.	Ref. No.
129150-02450	9	2
129150-02800	1	14
129150-02870	1	29
129150-02930	1	17
129150-02940	1	30
129150-11230	6	36
129150-11280	6	33
129150-11290	6	28
129150-11310	7	3
129150-11750	6	37
129150-11810	6	46
129150-12111	8	2
	41	4
	42	9
129150-13110	16	1
	41	5
	42	16
129150-14101	9	4
129150-14200	9	7
129150-21200	10	3
129150-22300	10	22
129150-23600	10	28
129150-23610	10	30
129150-25020	9	9
129150-25052	9	10
129150-32020	11	2
	42	12
129150-39450	13	5
129150-42020	15	3
	42	15
129150-42320	15	2
129150-59120	19	21
129150-59130	19	24
129150-59580	21	16
129155-11241	6	27
129155-11260	6	31
129155-11270	6	32
129155-51020	17	62
129155-51140	17	12
129155-51180	17	14
129155-51200	17	16
129155-51270	17	23
129155-51280	17	24
	22	2
129155-51380	17	33
129155-51390	17	34
129155-51400	17	35
129155-51410	17	36
129155-51420	17	37
129155-51450	17	38

Parts No. Index

Parts No.	Fig. No.	Ref. No.
129155-51500	17	39
129155-51521	17	41
129155-51530	17	42
129155-51540	17	43
129155-51550	17	44
129155-51570	17	47
129155-51580	17	48
129155-51591	17	49
129155-51600	17	50
129155-51700	17	51
129155-51701	17	51 -1
129155-51710	17	52
129155-51711	17	52 -1
129155-51750	17	53
129155-51751	17	53 -1
129155-51760	17	54
129155-51761	17	54 -1
129155-51790	17	55
129155-52050	18	18
129155-61050	22	5
129155-61060	22	6
129155-61070	22	7
129155-61120	22	8
129155-61130	22	9
129155-61140	22	10
129155-61201	22	11
129155-61341	22	15
129155-61430	22	19
129155-61450	22	24
		25
129155-61460	22	26
129155-61470	22	27
129155-61480	22	28
129155-61490	22	33
129155-61540	22	52
129155-61810	22	55
129155-61830	22	57
129155-61950	22	58
129156-44760	15	5
129156-51910	17	56
129158-52000	17	66
	18	1
129158-52010	18	3
129158-52020	18	4
129158-52050	18	5
129158-52060	18	6
129158-52070	18	7
129158-52080	18	8
129158-52090	18	9
129158-52100	18	2

Parts No.	Fig. No.	Ref. No.
129158-52160	18	10
129158-52250	18	11
129158-52260	18	12
129158-52270	18	13
129158-52350	18	14
129158-52360	18	15
129158-52370	18	16
129158-52380	18	17
129170-01701	3	5
129170-03030	7	4
129170-03040	7	21
129170-03120	7	22
129170-03130	7	23
129170-07500	4	9
129170-07501	4	9 -1
129170-12100	8	1
129170-12580	8	11
129170-21001	10	1
129170-21580	10	10 -1
129170-21581	10	10 -2
129170-21650	10	15
129170-33000	12	1
129170-39300	13	14
129170-49010	14	21
129170-49050	14	31
129170-49240	14	30
129170-49260	15	22
129170-77820	27	13
129170-81030	29	7
129171-01320	1	31
129171-01330	1	24
	41	2
	42	2
129171-01340	1	32
129171-01600	3	1
129171-01710	3	6
129171-03090	7	13
129171-07900	6	41
129171-08100	5	1
129171-08110	5	2
129171-11320	7	18
129171-11330	7	19
129171-21590	10	10
129171-21650	10	6
129171-34860	11	7
129171-34880	11	6
129171-44000	16	3
129171-44110	16	12
129171-44440	16	13
129171-44600	16	15

Parts No.	Fig. No.	Ref. No.
129171-49030	31	4
129171-49200	15	18
129171-49480	16	7
129171-49540	15	12
129171-49900	14	35
129171-51040	17	4
129171-61000	22	1
129171-67100	24	1
129171-67300	36	2
129171-67310	36	3
129171-81010	29	4
129171-81020	29	5
129171-81070	29	8
129171-86300	29	14
129171-91171	40	1
129171-91191	39	1
129171-91200	40	6
129171-91600	40	3
129171-91850	39	8
129171-91880	40	13
129190-51590	17	49 -1
129198-01750	3	7
	42	8
129198-07350	4	2
129198-77932	27	1
129301-03660	7	14
		24
129301-34830	11	4
129400-77501	8	16
129402-22090	10	16
129402-22920	10	37
129402-22970	10	39
129410-03990	7	15
129470-01501	2	1
129470-01510	2	2
	42	3
129470-01531	2	4
	42	4
129470-01550	2	6
	42	5
129470-01620	3	2
	42	7
129470-03010	7	5
129470-08110	5	5
129470-08120	5	6
129470-08350	5	9
129470-11090	6	6
129470-11850	6	5
129470-11920	19	2
129470-12210	8	7

Parts No.	Fig. No.	Ref. No.
129470-13541	31	1
129470-13550	16	35
129470-32000	11	1
129470-33510	12	4
129470-33550	12	3
129470-35040	3	17
	11	17
	42	13
129470-35101	11	25
129470-35121	11	35
	42	14
129470-35131	11	26
129470-39201	13	2
129470-42001	15	1
129470-42520	14	3
	41	14
129470-42530	14	4
	41	15
129470-42550	14	6
129470-42700	14	14
129470-44450	16	14
129470-49040	14	22
129470-49110	14	23
129470-49220	15	19
129470-49240	15	20
129470-49250	15	21
129470-49550	15	13
	41	17
129470-49801	15	14
	41	18
129470-49810	15	15
	41	19
129470-51060	17	6
129470-51080	17	7
129470-51101	17	9
129470-54510	20	2
129470-54650	20	8
129470-55601	21	28
129470-55701	21	30
	41	23
129470-59120	21	2
		3
129470-59530	21	12
129470-59540	21	13
129470-59560	21	15
129470-61650	22	53
129470-67200	24	2
129470-67320	36	4
129470-67550	23	5
129470-67560	23	6

Parts No. Index

Parts No.	Fig. No.	Ref. No.
129470-77200	30	1
129470-77330	26	21
	30	21
129470-77340	26	22
	30	22
129470-77590	8	6
	42	10
129470-77971	36	12
129470-86500	38	3
129470-91160	40	16
129470-91180	40	2
129470-91190	39	5
129470-92300	28	8
129470-92310	28	9
129470-92320	28	10
129472-13560	31	2
129472-18090	16	36
	31	3
	41	6
	42	11
129473-34850	11	5
129473-35090	11	18
129473-35091	11	18 -1
129473-61801	22	54
129490-49070	14	34
129495-59300	21	11
129495-91010	39	2
129499-54550	20	5
129499-61440	22	23
129500-61501	22	34
129550-42350	15	4
129570-12300	8	10
129570-77920	37	13
129570-91320	37	14
	41	27
129573-25090	9	14
129573-25100	9	11
129573-42500	14	1
129573-42540	14	5
	41	16
129573-51300	17	25
129573-51330	17	28
129573-51340	17	29
129573-51370	17	32
129573-77951	37	9
129573-77960	37	10
129574-77710	27	11
129574-77720	27	12
129590-34870	11	8
129590-59200	27	14

Parts No.	Fig. No.	Ref. No.
129590-67310	23	1
129772-77200	26	1
129795-01780	3	3
129795-01800	2	9
129795-01950	1	21
	2	20
129795-02411	1	20
129795-11120	6	16
129795-11180	6	17
129795-21661	10	7
129795-42670	14	7
129795-48800	34	1
129C26-01890	7	16 -1
	42	6 -1
135665-07210	4	1
138603-59380	35	4
144626-91560	37	4
144626-91570	37	5
145410-46190	14	8
157854-04300	40	17
171008-77010	25	1
171008-77400	25	2
171008-77410	25	3
171008-77420	25	4
171008-77430	25	5
171008-77440	25	6
171008-77450	25	7
171008-77460	25	8
171008-77470	25	9
171008-77480	25	10
171008-77490	25	11
171008-77500	25	12
171008-77510	25	13
171008-77520	25	14
171008-77530	25	15
171008-77540	25	16
171008-77550	25	17
171008-77560	25	18
171008-77571	25	19
171008-77640	25	20
171008-77650	25	21
171008-77660	25	22
171008-77670	25	23
171008-77680	25	24
171008-77690	25	25
171008-77700	25	26
171008-77720	25	27
171008-77730	25	28
171008-77740	25	29
171008-77750	25	30

Parts No.	Fig. No.	Ref. No.
171051-01921	1	5
171078-66551	36	1
171087-42280	15	7
	41	13
171487-61011	22	3
174307-51170	17	13
174307-51700	22	35
177040-03080	45	14
177040-03081	45	14 -1
177070-03190	45	11
177070-03200	45	10
177070-03520	29	2
	44	4
177070-03550	45	12
177070-03640	45	13 A
177070-03651	45	16
177070-03660	45	17
177070-03670	45	18
177070-03681	45	19
177070-03691	45	20
177070-03700	45	21
177070-03741	45	22
177070-03750	45	23
177070-62040	43	6
177070-62120	43	7
177070-63010	44	1
177070-63020	44	2
177070-63030	44	3
177070-63040	45	1
177070-63110	44	9
177070-63120	44	10
177070-63130	44	11
177070-63150	45	3
177070-63230	45	6
177070-63250	45	7
177070-63300	44	12
177070-63400	44	5
177070-66590	47	6
177070-66600	47	8
177073-03170	45	2
177073-03191	29	21
	44	7
177073-06200	46	1
177073-06210	46	1 -1
177073-06600	47	1
177074-02450	43	11
177074-06300	47	7
	51	14
177075-02550	4	7
	48	28

Parts No.	Fig. No.	Ref. No.
177075-02551	48	28 -1
177080-02030	48	14
177084-06340	51	13
177084-06350	51	15
177088-02120	43	7 -1
177088-02300	43	8
		9
177088-02400	43	10
177088-02401	43	10 -1
177088-02430	4	6
	43	23
	48	27
177088-02961	43	19
177088-03272	45	4
177088-03290	45	5
177088-03540	45	8
177088-06340	46	2
177088-06360	46	6
177088-06370	46	7
177088-06380	46	8
177088-06390	46	9
177088-06400	46	10
177090-02620	48	20
177090-02630	48	19
177090-03080	50	22
177090-03090	45	15
	50	23
177090-03110	50	19
177090-03121	50	21
177090-03180	50	13
177090-03230	50	8
177090-03270	50	25
177090-09010	52	4
177095-02980	48	25
177095-03190	50	9
177095-03200	50	10
	51	8
177095-03210	50	14
177095-03280	50	20
177095-03800	50	26
177095-03900	50	27
177095-06030	51	5
177095-06040	51	10
177095-06041	51	10 -1
177095-06050	51	6
177095-06060	51	9
177095-06140	51	7
177095-09020	52	5
177095-09070	52	3
177095-09170	52	7

Parts No. Index

Parts No.	Fig. No.	Ref. No.
177099-02081	48	17
177099-02091	48	18
177099-02130	48	13
177099-02250	48	26
177099-02421	48	9
177099-02422	48	9 -1
177099-02450	48	21
177099-02470	48	21 A
177099-02950	48	23
177099-02960	48	24
177099-03011	49	3
177099-03021	50	1
177099-03040	50	4
177099-03070	50	11
177099-03080	50	12
177099-03101	50	17
177099-03111	50	18
177099-03161	50	24
177099-03301	49	6
177099-03321	49	9
177099-03360	49	2 -1
177099-03370	50	16
177099-03411	49	1
177099-03431	50	15
177099-03470	50	28
177099-03500	29	1
	49	11
177099-03540	50	30
177099-03550	50	29
177099-03901	49	10
177099-03920	49	4
	50	3
177099-03980	49	7
177099-06010	51	1
177099-06041	51	4
177099-06050	51	12
177099-09010	52	1
177099-09020	52	9
177099-09030	52	2
177099-09040	52	6
177099-09080	52	8
194555-55820	40	15
194555-62750	27	15
196322-06610	46	4
22117-040000	22	61
22117-080000	36	5
22133-100000	48	8
22137-060000	46	11
22137-080000	16	26
	26	23

Parts No.	Fig. No.	Ref. No.
22137-080000	27	4
		20
	30	23
22137-100000	26	24
	30	24
22190-080000	45	24
22190-160002	17	60 -1
22212-050000	47	2 -1
22217-050000	17	65
	24	7
	29	15
	47	2
22217-060000	17	57
	36	6
22217-080000	11	10
		22
	15	6
	24	8
	27	5
		21
	29	22
22217-100000	11	11
22242-000100	24	6
22242-000320	20	19
22252-000420	14	9
22272-000040	22	62
22272-000060	22	63
22287-080000	48	5
22287-100000	48	16
22287-120000	22	64
22312-080160	10	13
22312-100200	52	10
22351-020012	46	5
22351-030016	22	65
22351-050010	17	58
22351-060012	1	22
22360-080000	36	7
22372-040000	22	66
22414-250150	23	2
	24	9
22417-200120	46	12
22417-250200	46	12 -1
22512-070140	9	5
	10	4
22512-070160	10	14
22724-800380	25	36
23000-035000	14	25
		26
		36
	31	6

Parts No.	Fig. No.	Ref. No.
23000-041000	15	23
	34	13
23000-054000	8	5
23010-013000	16	34
23010-014000	35	5
23061-070300	1	27
	14	27
23061-120300	16	27
23072-101000	34	12
23080-013000	21	6
		23
23341-150000	13	4
		16
23414-080000	1	33
	2	10
	13	13
	21	24
	24	10
23414-100000	13	10
23414-120000	21	7
		25
23414-140000	21	26
23414-160000	11	12
23414-160021	3	16
	48	12
		22
23414-170000	16	8
23414-180000	11	34
23414-200000	13	11
23414-240031	20	21
23857-060000	21	8
23857-150000	13	12
23871-010000	1	6
	8	9
	37	7
23871-020000	11	28
23871-030000	3	13
		14
	6	10
23887-100002	22	67
23887-160002	3	15
	48	11
23894-030002	16	9
24101-062024	14	11
	44	14
24101-062034	44	13
24101-063024	14	10
24141-302050	44	6
	45	9
24161-303520	45	10 -1

Parts No.	Fig. No.	Ref. No.
24311-000060	34	11
24311-000120	7	12
24311-000150	14	13
24311-000180	43	15
24311-000210	45	13
24311-000320	2	11
	7	10
24311-000340	45	25
24311-240100	22	68
24321-000400	43	16
24321-000750	16	23
	41	25
24341-000150	49	8
24341-000160	17	59
24341-000260	2	12
24341-000300	50	2
24341-000500	7	6
24341-000600	14	15
	41	26
24341-001050	45	26
24413-254008	43	17
24421-203508	14	12
24421-284008	43	18
24421-405208	48	24 -1
26013-080142	29	9
26016-080252	43	21
26016-080302	43	20
26022-050102	17	63
	22	69
26022-050122	17	63 -1
26022-060122	22	51
26022-060162	17	64
26023-050102	22	79
26106-060102	15	8
	36	8
	37	11
26106-060162	2	13
26106-060202	22	70
	36	9
26106-060322	25	31
26106-060402	25	32
26106-080102	21	27
26106-080122	1	34
	11	16
	24	11
	36	10
26106-080142	6	42
	7	20
	11	23
26106-080162	1	28

Parts No. Index

Parts No.	Fig. No.	Ref. No.
26106-080162	2	14
	7	17
	11	13
	12	5
	14	18
	16	24
	27	6
	29	10
		23
	44	8
26106-080202	7	7
	11	37
	27	16
26106-080222	6	43
26106-080252	3	8
		9
		10
	6	39
	8	3
	14	28
	15	16
	16	25
	24	12
	26	25
	29	11
	30	25
	46	13
26106-080352	8	4
	11	24
26106-080402	3	11
	7	8
	8	12
		15
26106-080452	2	15
	9	6
	45	27
26106-080502	6	40
26106-080552	2	16
	11	38
	15	9
		10
26106-080652	15	11
26106-080852	2	17
26106-081002	16	28
26106-100162	29	16
	37	12
26106-100202	5	3
26106-100252	3	12
	11	14
26106-100302	3	4

Parts No.	Fig. No.	Ref. No.
26106-100302	21	31
26106-100322	29	26
26116-050142	23	3
26116-050302	17	61
26116-080252	51	11
26116-080302	34	14
	47	9
26116-080404	47	10
	51	16
26116-081602	16	29
26116-100302	48	15
26116-101202	26	26
	30	26
26116-120302	5	4
	25	34
26203-060102	14	16
26216-060202	6	13
26216-080182	2	18
26216-080222	7	25
	48	3
26216-081002	6	22
26223-100222	48	6
26226-080182	6	38
26226-080222	29	12
26366-080002	2	19
	11	15
	14	19
	16	30
	22	71
	24	13
	29	13
26367-060002	6	23
26450-060252	11	3
26450-080282	29	27
26557-050122	24	14
	29	17
26557-050162	47	3
26664-080002	34	7
26703-080002	16	37
	31	7
	34	15
26703-100002	48	7
26706-100002	29	28
26716-050002	24	15
	29	18
	47	4
26716-060002	17	40
26716-080002	27	17
	47	11
	48	4

Parts No.	Fig. No.	Ref. No.
26716-100002	26	27
	30	27
26716-120002	28	11
26756-050002	23	4
26756-060002	22	72
		73
26756-080002	29	29
26776-120002	22	74
26979-040082	47	12
	51	17
27225-100140	1	7
27231-500000	1	8
27241-100000	6	30
27241-120000	1	9
27241-220000	6	11
27241-280000	16	10
27241-300000	1	10
27241-400000	6	12
	16	11
27720-401501	38	5
27720-402001	38	6
27720-402501	38	7
27720-403001	38	8
27720-403501	38	9
27720-404001	38	10
27720-404501	38	11
27720-405001	38	12
27720-405501	38	13
27720-406001	38	14
27720-406501	38	15
27720-407001	38	16
27720-407501	38	17
27720-408001	38	18
27720-408501	38	19
27720-409001	38	20
27720-410001	38	21
28110-100130	28	4
28110-120140	28	5
28110-170190	28	6
28110-220240	28	7
41701-001720	24	17
41710-000380	38	4
41710-000410	24	16
	29	19
	47	5
41710-001300	29	20
41730-000681	38	2
43400-500390	22	75
43400-500400	22	76
43400-500430	22	77

Parts No.	Fig. No.	Ref. No.
43400-500450	22	78
43400-500490	17	60
43530-500570	14	32
43580-500680	37	6
43662-025030	14	33
46150-003610	40	11
46150-003620	40	12
48110-028063	29	30
48110-032411	29	31
48110-032502	29	32
704507-92100	28	1
711100-51540	17	17
729120-22500	10	18
	41	7
729120-22950	10	33
729170-51300	17	1
729170-92500	41	1
729170-92510	41	1 A
729171-01560	1	1
729171-11520	7	1
729171-44500	16	2
729171-92600	42	1
729198-11700	6	1
729198-53100	19	1
729402-11650	6	34
729402-22910	10	31
729402-23100	10	24
729499-54100	20	1
777070-62100	43	1
777099-02550	48	1
777099-03021	49	5
83213-003012	35	7
977770-01212	42	17
977781-00120	33	1
977781-00121	32	1
977781-00123	32	2
	33	2
977781-00124	33	3
977781-00125	32	3
X0044021500	32	7
	33	7
X0044021509	32	6
	33	6
X17910000XX	32	4
X17910001XX	33	4
X179100100X	32	5
	33	5
X199903800X	32	8
	33	8
X418500100X	32	9

Parts No. Index

Parts No.	Fig. No.	Ref. No.
X418500100X	33	9
X6201NC	30	18
X6201SD	26	3
X6203BM	26	16
X6303BM	30	14
XL12013262	26	9
XL13513134	26	12
XL15014042	26	15
XL15018015	26	18
XL1501810	26	19
	30	17
XL15028001	26	20
	30	19
XL150M14041	30	13
XL15542001	26	4
XL15553002	26	5
XL1556315	26	7
	30	6
XL15571001	26	2
XL1801200	30	3
XL1801335	30	8
XL18018015	30	16
XL1805100	30	2
XL1805301	30	5
XL1805500	30	15
XL1808320	30	10
XL1809300	30	4
XL2251318	26	11
	30	11
XL2253320	26	13
XL2253400	26	14
XL22553012	26	6
XL2255320	30	7
XL2255330	26	8
XL22555001	26	17
XL23534011	30	12
XTR1Z63	26	10
	30	9
XTST25S001	34	2
XTST25S002	34	3
XTST25S003	34	4
XTST25S004	34	5
XTST25S005	34	6
XTST25S007	34	8
XTST25S008	34	9
XTST25S009	34	10

Parts No.	Fig. No.	Ref. No.

Parts No.	Fig. No.	Ref. No.

Parts No.	Fig. No.	Ref. No.