YANMAR

PARTS CATALOG

0CF10-M50602EN

Last update Nov., 2018

P R E F A C E

1. This parts catalog has been issued Model 3GM30(-B,C,F) parts catalog (Pub. No.000Y00R3761) .

Parts catalog No.:000Y00F5062
Date of issue :Mar.,1995

2. This Parts Catalog covers all parts of engines produced since May, 1984 .

3. Specification and Model code.

Model	Specification	Cooling System	Model Code
3GM30	Marine main engine (for export)	Ser water cooling	128374(S,N,G)
3GM30-B	Marine main engine (domestic use)		128374(A,B,C)
3GM30C	For sail drive		128374 E
3GM30F	Marine main engine (for export)	Fresh water r cooling	128391(S,N,G)

4. Parts of sail drive are not listed in this Parts Catalog. regarding these Parts, Please refer to the separate-volume "SD20/SD30 Sail drive Parts Catalog" (Pub.No.000YE0F1291)

5. Engine painting color ·····Urethane metallic echol silver

Replacement parts painted in metallic echol silver are as follows.

Parts No.	Description
977620-10070	1 ℓ (can)
977620-40070	4 ℓ (can)
977620-30071	Spray,one

KM3-A 断面図
KM3-A SECTIONAL VIEW

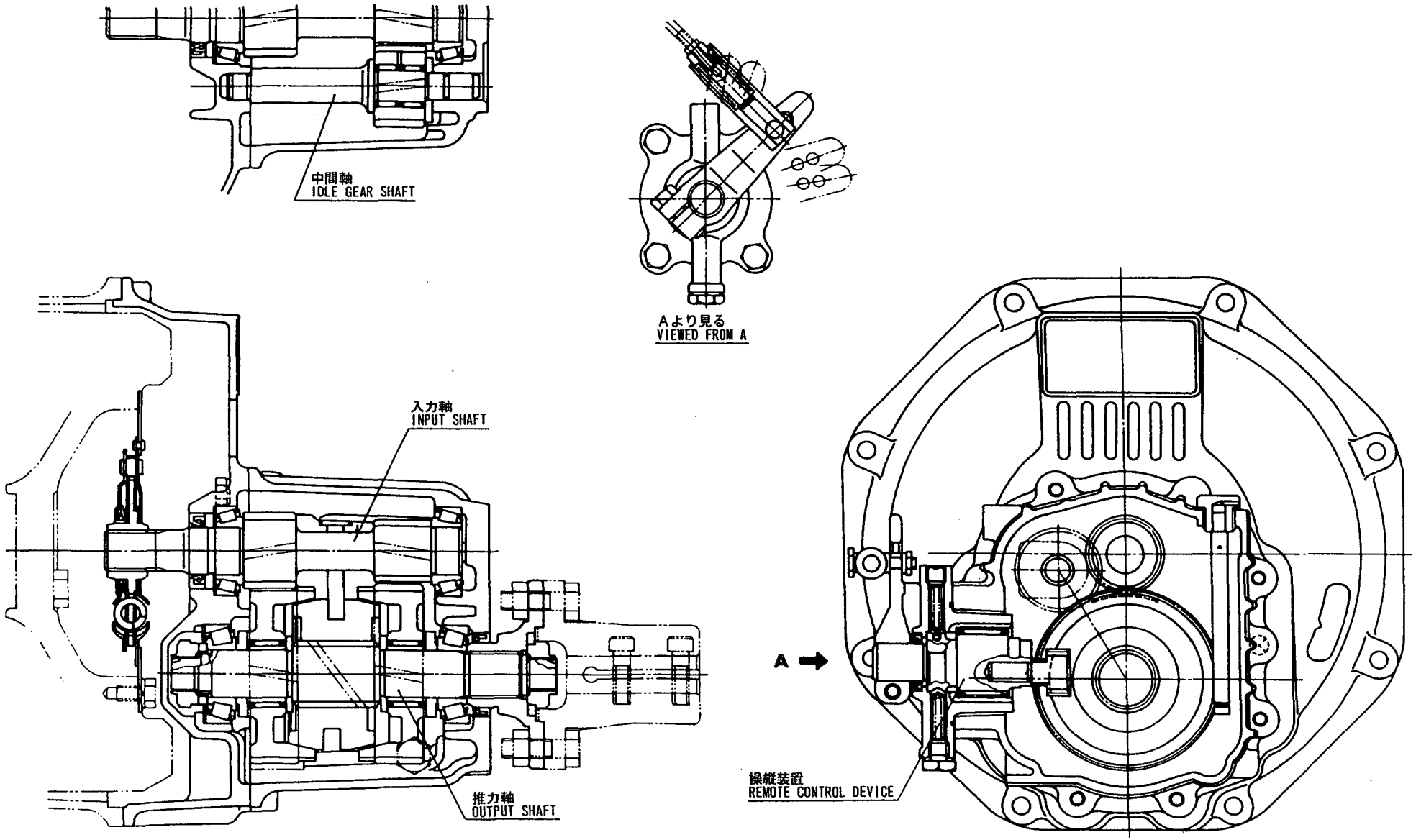

KM3V 断面図
KM3V SECTIONAL VIEW

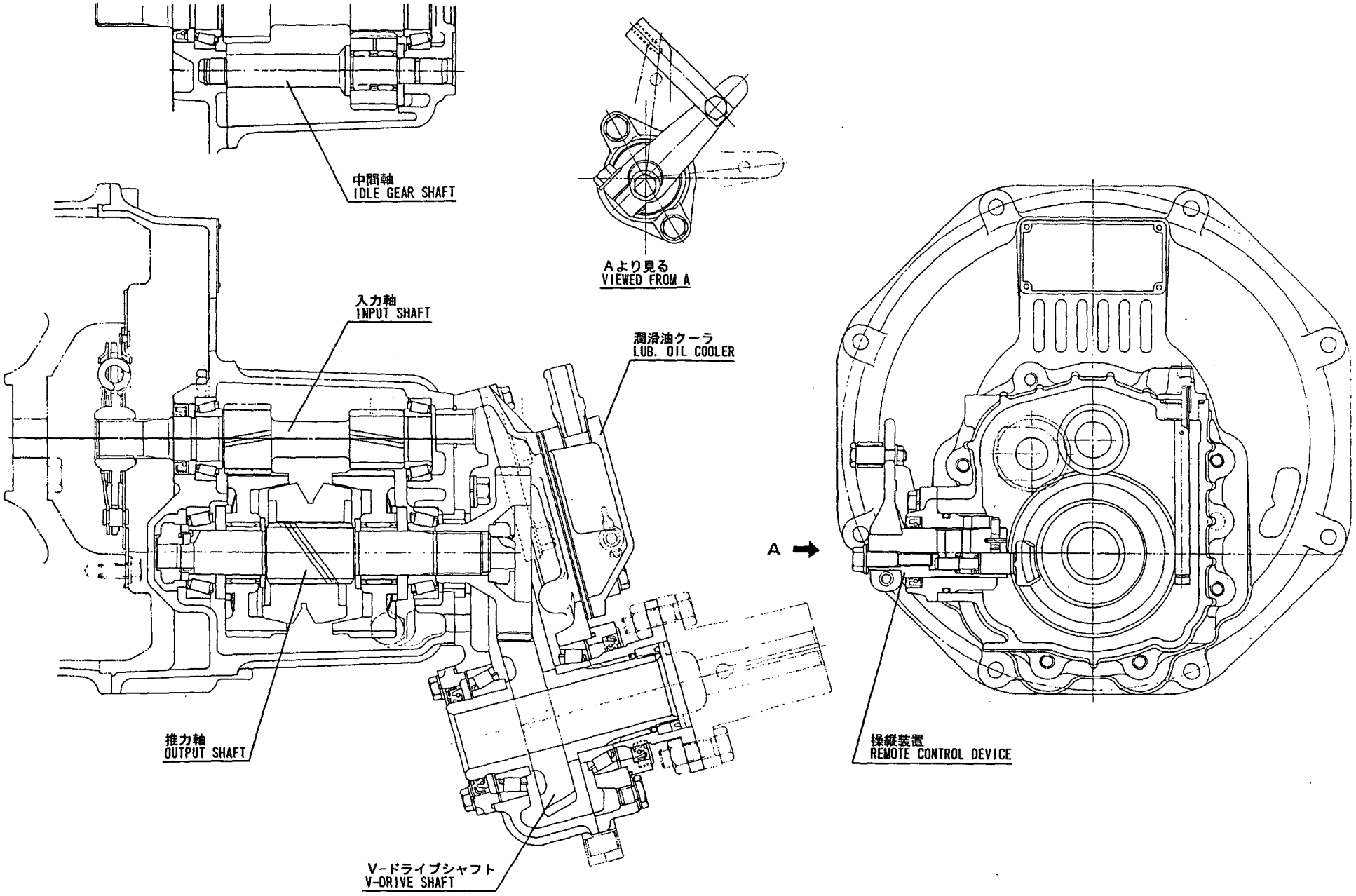

KM3P 断面図
KM3P SECTIONAL VIEW

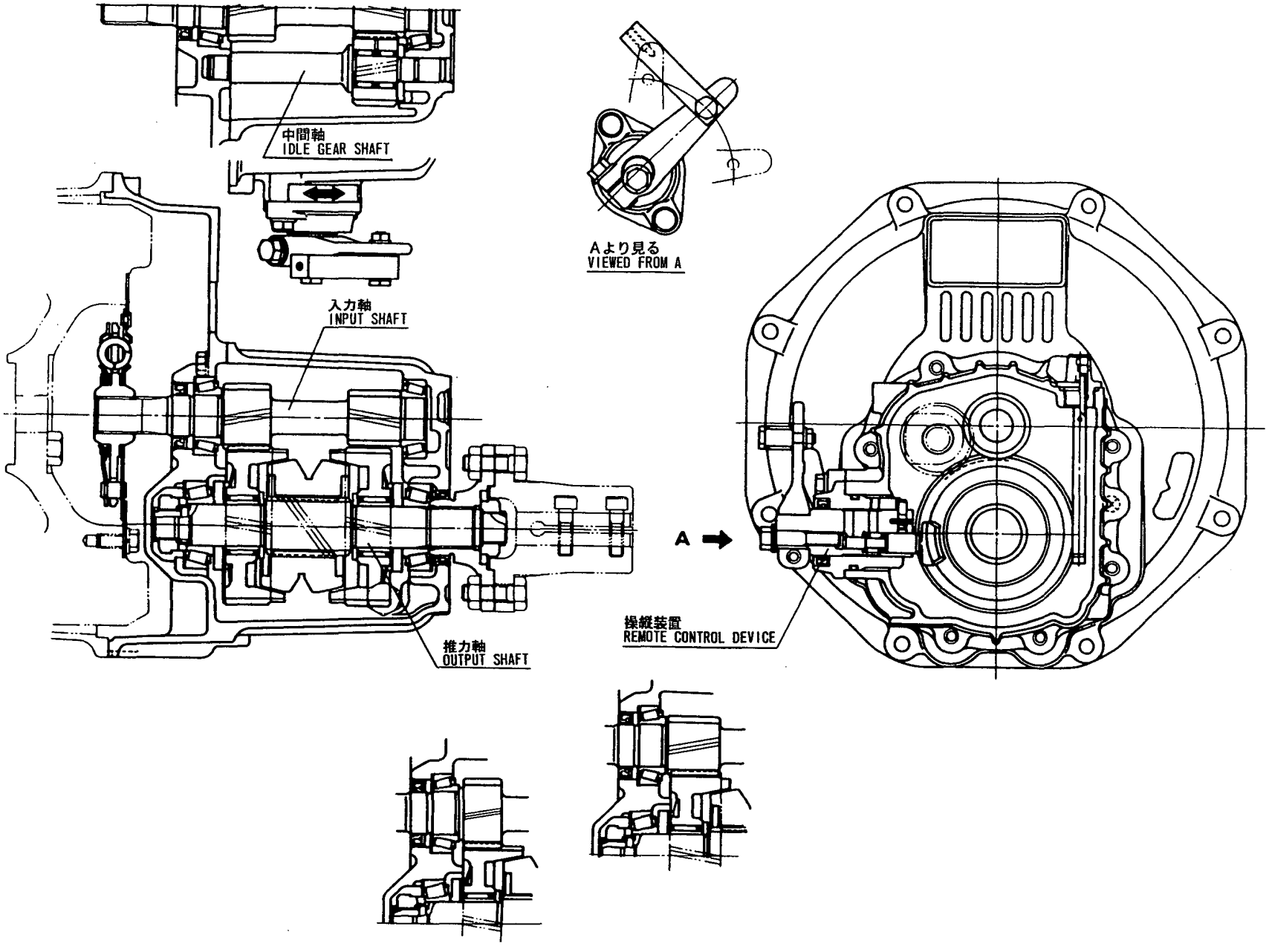

Contents

0CF10-M50602

Fig. No.	Fig. Name
3GM30	
1.	CYLINDER BLOCK
2.	CYLINDER BLOCK
3.	GEAR HOUSING
4.	GEAR HOUSING
5.	LUB. OIL SUMP
6.	FLYWHEEL HOUSING
7.	FLYWHEEL HOUSING
8.	MAIN BEARING HOUSING
9.	BREATHER
10.	LABEL
11.	ENGINE LIFTER
12.	ENGINE LIFTER
13.	ENGINE BRACKET
14.	FLEXIBLE MOUNT
15.	ANTI-CORROSIVE ZINC
16.	CYLINDER HEAD
17.	CYLINDER HEAD
18.	BONNET
19.	AIR INTAKE SILENCER
20.	EXHAUST MANIFOLD
21.	MIXING ELBOW
22.	CAMSHAFT
23.	CAMSHAFT
24.	CRANKSHAFT & FLYWHEEL
25.	PIST0N
26.	CONNECTING ROD
27.	LUB. OIL PUMP
28.	LUB. OIL DIPSTICK
29.	LUB. OIL STRAINER
30.	L.O.PRESS.REGULATING VALVE
31.	LUB. OIL LINE
32.	COOLING SEA WATER PUMP
33.	COOLING SEA WATER PUMP
34.	COOLING FRESH WATER PUMP
35.	COOLING FRESH WATER COOLER
36.	SUBTANK
37.	KINGSTON COCK
38.	COOLING WATER LINE
39.	COOLING WATER LINE
40.	THERMOSTAT
41.	THERMOSTAT
42.	COOLING WATER LINE(OPTIONAL)
43.	FUEL INJECTION PUMP
44.	FUEL FEED PUMP
45.	FUEL INJECTION VALVE
46.	FUEL STRAINER
47.	FUEL INJECTION LINE
48.	FUEL INJECTION LINE
49.	FUEL PIPE

Contents

Fig. No.	Fig. Name
50.	FUEL PIPE
51.	FUEL RETURN LINE
52.	GOVERNOR DRIVING
53.	CONTROL DEVICE
54.	IDLE ADJUSTER
55.	FUEL CONTROL DEVICE
56.	ENGINE STOP DEVICE
57.	SPEED REMOTE CONTROL
58.	HAND START
59.	STARTING MOTOR
60.	GENERATOR
61.	GENERATOR
62.	BATTERY SWITCH
63.	WIRE HARNESS
64.	CLUTCH & DAMPER DISC
65.	DUMPER DISK(FOR SAIL DRIVE)
66.	TAPER COUPLING
67.	CLUTCH REMOTE CONTROL
68.	PANEL(A-TYPE)
69.	TOOL
70.	STARTING MOTOR COMPONENT PART
71.	GENERATOR COMPONENT PART
72.	MIXING ELBOW(OPTIONAL)
73.	MIXING ELBOW(OPTIONAL)
74.	LUB.OIL WASTE PUMP(OPTIONAL)

Fig. No.	Fig. Name
75.	ELECTRIC BILGE PUMP(12V)(OP)
76.	KINGSTON COCK(OPTIONAL)
77.	FUEL TANK(OPTIONAL)
78.	ENGINE STOP CABLE(OPTIONAL)
79.	TAPER COUPLING(OPTIONAL)
80.	COUPLING(OPTIONAL)
81.	STRAIGHT COUPLING(OPTIONAL)
82.	SLIT COUPLING(OPTIONAL)
83.	SINGLE LEVER CONTROL(OPTIONAL)
84.	PANEL(B-TYPE)(OPTIONAL)
85.	PANEL(B-TYPE)(NEW)(OPTIONAL)
86.	PANEL(A-TYPE)(OPTIONAL)
87.	EXTENSION WIRE(OPTIONAL)
88.	SPECIAL TOOL(OPTIONAL)
89.	REPAIR PART(OPTIONAL)
90.	REPAIR PART(OPTIONAL)
91.	GASKET SET(OPTIONAL)

KM3-A

92.	CLUTCH HOUSING
93.	INPUT SHAFT & SUPPORT SHAFT
94.	OUTPUT SHAFT
95.	REMOTE CONTROL DEVICE
96.	TOOL(OPTIONAL)

Contents

Fig. No.	Fig. Name
KM3P	
97.	CLUTCH HOUSING
98.	INPUT SHAFT & SUPPORT SHAFT
99.	OUTPUT SHAFT
100.	REMOTE CONTROL DEVICE
101.	TOOL(OPTIONAL)
KM3V	
102.	CLUTCH HOUSING
103.	V-DRIVE HOUSING
104.	INPUT SHAFT
105.	SUPPORT SHAFT
106.	OUTPUT SHAFT
107.	V-DRIVE SHAFT
108.	LUB. OIL COOLER
109.	REMOTE CONTROL DEVICE
110.	TOOL(OPTIONAL)
111.	SAFETY LABEL

Fig.1. CYLINDER BLOCK

P/C NEWS No:Y00F5062-2
PUBLISHED:2000/11

Fig. 1 シリンダブロック
CYLINDER BLOCK

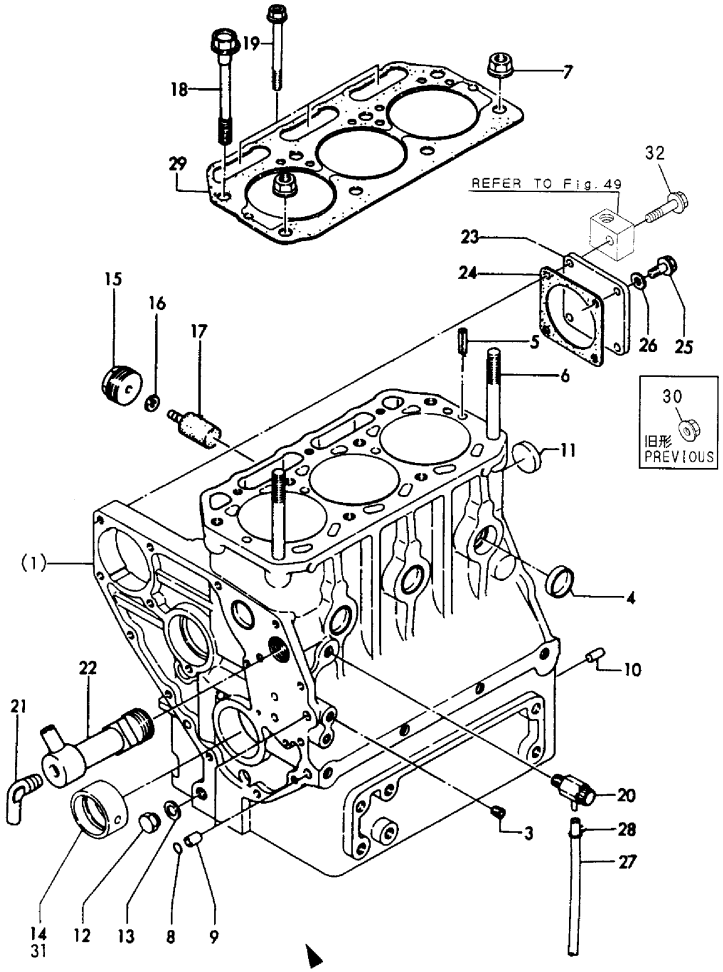

見出しNo.1は,見出しNo.(1)から17を含みます。
1 inc.(1) ~ 17

(A)=3GM30 (B)=3GM30VE (C)=3GM30B (D)=3GM30C (E)=3GM30F (F)=3GM30FVE

No.	Lev.	Parts No.	Description	Q'ty (A)	(B)	(C)	(D)	(E)	(F)	I	R
1	1	728374-01560	BLOCK ASSY, CYLINDER	1	1	1	1				
3	2	124060-01050	PLUG, PT1/8	7	7	7	7				
4	2	105311-01090	PLUG, CUP TYPE 30	5	5	5	5				
5	2	22351-060012	PIN, SPRING 6.0X12	2		2	2			Z	
	(A=EXXX)		(C=EXXX) (D=EXXX)								
6	2	121450-01210	BOLT, HEAD	2	2	2	2				
7	2	121450-01220	NUT, CYLINDER HEAD	2	2	2	2				
8	2	24311-000100	O-RING, 1AP10.0	2	2	2	2				
9	2	124085-01900	GUIDE	2	2	2	2				
10	2	22312-080160	PIN, PARALLEL M8X16	2	2	2	2				
10-1	2	129100-01580	PIN, PARALLEL 8X16	2	2	2	2			R	
	(A=*1997.07)	(B=*1997.07)	(C=*1997.07) (D=*1997.07)								
11	2	27243-300000	PLUG, 30	1		1	1				
11-1	2	121450-01990	PLUG, 30	1	1	1	1			N	
	(A=EXXX)		(C=EXXX) (D=EXXX)								
12	2	121450-01960	PLUG, PF1/4	1	1	1	1				
13	2	121450-01980	GASKET	1	1	1	1				
14	2	121450-02100	BEARING, MAIN	1	1	1	1				
15	2	128270-09300	PLUG, NPTF1	2	2	2	2				
16	2	123210-09310	GASKET	2	2	2	2				
17	2	27210-200300	ZINC, SCREW20X30	2	2	2	2				
18	1	121450-01203	BOLT, HEAD	6	6	6	6				
19	1	129350-01230	BOLT, HEAD	3	3	3	3				
20	1	128371-01800	COCK ASSY, 1/4	1	1	1	1				
21	1	105583-49910	ELBOW, PT1/4	1	1	1	1				
22	1	128270-01450	JOINT	1	1	1	1				
23	1	124240-01871	COVER, PUMP	1	1	1	1				
24	1	124240-01882	GASKET	1		1	1				
24-1	1	124240-01883	GASKET	1	1	1	1			N	
	(A=E/#10103)		(C=E/#00309) (D=E/#01060)								
24-2	1	129C26-01890	GASKET, HO-P	1	1	1	1			R	
	(A=EXXXXX)	(B=EXXXXX)	(C=EXXXXX) (D=EXXXXX)								
25	1	26106-080142	BOLT, M8X 14 PLATED	2	2	2	2				
25-1	1	26106-080142	BOLT, M8X 14 PLATED	3	3	3	3			K	
	(A=*1997.01)	(B=*1997.01)	(C=*1997.01) (D=*1997.01)								
26	1	23414-080000	GASKET, 8X1.0	1	1	1	1				
27	1	23061-070200	PIPE, 7X 200	1	1	1	1				
27-1	1	23061-070300	PIPE, 7X 300	1	1	1	1			R	
	(A=*1997.08)	(B=*1997.08)	(C=*1997.08) (D=*1997.08)								
28	1	124460-77680	RETAINER	1	1	1	1				
29	1	128374-01330	GASKET, HEAD	1		1	1				
29-1	1	128374-01911	GASKET, HEAD	1	1	1	1			N	
	(A=E/#04576)		(C=E/#00202) (D=E/#00119)								
30	1	26366-080002	NUT, M8	2	2	2	2			Z	
	(A=*1997.01)	(B=*1997.01)	(C=*1997.01) (D=*1997.01)								
31	1	121450-02310	BEARING, 0.25 US	1	1	1	1				1
32	1	26106-080322	BOLT, M8X 32 PLATED	1	1	1	1			W	
	(A=*1997.01)	(B=*1997.01)	(C=*1997.01) (D=*1997.01)								

Remarks
(1)Under sized(U.S.=0.25)part.

N:Old $\overset{\text{Yes}}{\underset{\text{No}}{\leftrightarrow}}$ New, Q:Old $\overset{\text{No}}{\underset{\text{Yes}}{\leftrightarrow}}$ New, R:Old $\overset{\text{Yes}}{\underset{\text{Yes}}{\leftrightarrow}}$ New, S:Old $\overset{\text{No}}{\underset{\text{No}}{\leftrightarrow}}$ New, W:Add, Z:Discontinued, F:Interchangeable by set, K:Q'ty Change

Copyright (C) YANMAR CO., LTD. All RightsReserved.

Fig.2. CYLINDER BLOCK

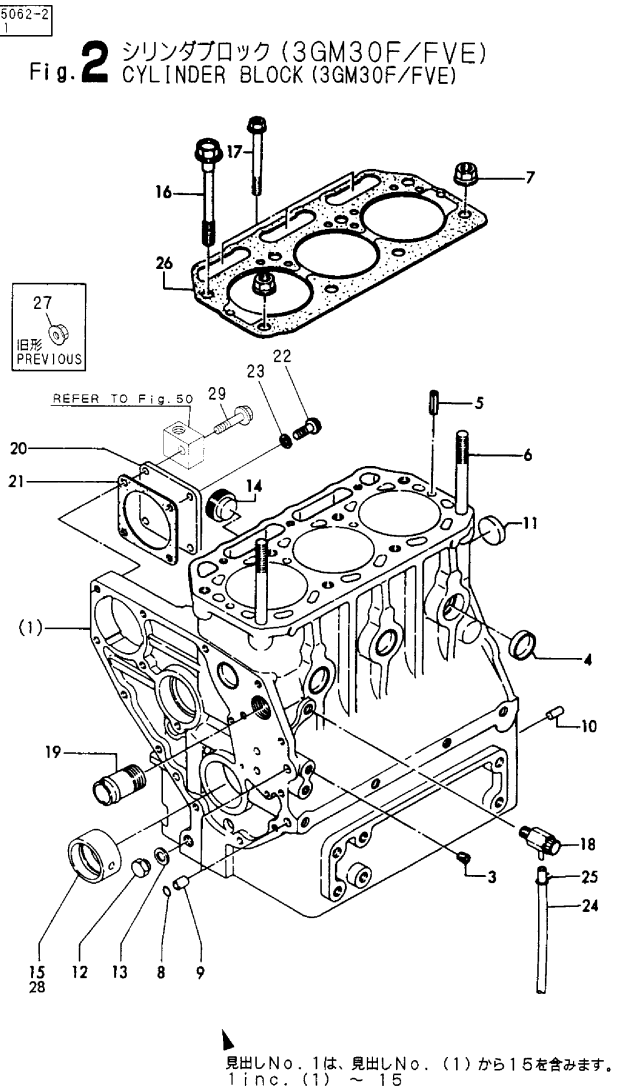

(A)=3GM30 (B)=3GM30VE (C)=3GM30B (D)=3GM30C (E)=3GM30F (F)=3GM30FVE

No.	Lev.	Parts No.	Description	Q'ty (A)	(B)	(C)	(D)	(E)	(F)	I	R
1	1	728397-01560	BLOCK ASSY, CYLINDER					1	1		1
3	2	124060-01050	PLUG, PT1/8					7	7		
4	2	105311-01090	PLUG, CUP TYPE 30					5	5		
5	2	22351-060012	PIN, SPRING 6.0X12					2		Z	
					(E=EXXX)						
6	2	121450-01210	BOLT, HEAD					2	2		
7	2	121450-01220	NUT, CYLINDER HEAD					2	2		
8	2	24311-000100	O-RING, 1AP10.0					2	2		
9	2	124085-01900	GUIDE					2	2		
10	2	22312-080160	PIN, PARALLEL M8X16					2	2		
10-1	2	129100-01580	PIN, PARALLEL 8X16					2	2	R	
					(E=*1997.07)				(F=*1997.07)		
11	2	27243-300000	PLUG, 30					1			
11-1	2	121450-01990	PLUG, 30					1	1	N	
					(E=EXXX)						
12	2	121450-01960	PLUG, PF1/4					1	1		
13	2	121450-01980	GASKET					1	1		
14	2	171051-01921	PLUG, NPTF1					2	2		
15	2	121450-02100	BEARING, MAIN					1	1		
16	1	121450-01203	BOLT, HEAD					6	6		
17	1	129350-01230	BOLT, HEAD					3	3		
18	1	128371-01800	COCK ASSY, 1/4					1	1		
19	1	124160-49480	JOINT, PIPE					1	1		
20	1	124240-01871	COVER, PUMP					1	1		
21	1	124240-01882	GASKET					1			
21-1	1	124240-01883	GASKET					1	1	R	
					(E=E/#10104)						
21-2	1	129C26-01890	GASKET, HO-P					1	1	R	
					(E=EXXXXX)				(F=EXXXXX)		
22	1	26106-080142	BOLT, M8X 14 PLATED					2	2		
22-1	1	26106-080142	BOLT, M8X 14 PLATED					3	3	K	
					(E=*1997.01)				(F=*1997.01)		
23	1	23414-080000	GASKET, 8X1.0					1	1		
24	1	23061-070200	PIPE, 7X 200					1	1		
25	1	124460-77680	RETAINER					1	1		
26	1	128374-01330	GASKET, HEAD					1			
26-1	1	128374-01911	GASKET, HEAD					1	1	N	
					(E=E/#04594)						
27	1	26366-080002	NUT, M8					2	2	Z	
					(E=*1997.01)				(F=*1997.01)		
28	1	121450-02310	BEARING, 0.25 US					1	1		2
29	1	26106-080322	BOLT, M8X 32 PLATED					1	1	W	
					(E=*1997.01)				(F=*1997.01)		

Remarks
(1)Cylinder block assy of model 3GM30F is supplied as model 3GM30. Although component parts are partlydifferet,but interchangeable.
(2)Under-sized(U.S.=0.25)part.

N:Old ←Yes/No→ New, Q:Old ←No/Yes→ New, R:Old ←Yes/Yes→ New, S:Old ←No/No→ New, W:Add, Z:Discontinued, F:Interchangeable by set, K:Q'ty Change

Copyright (C) YANMAR CO., LTD. All RightsReserved.

Fig.3. GEAR HOUSING

P/C NEWS No:Y00F5062-2
PUBLISHED:2000/11

Fig. 3 ギヤケース GEAR HOUSING

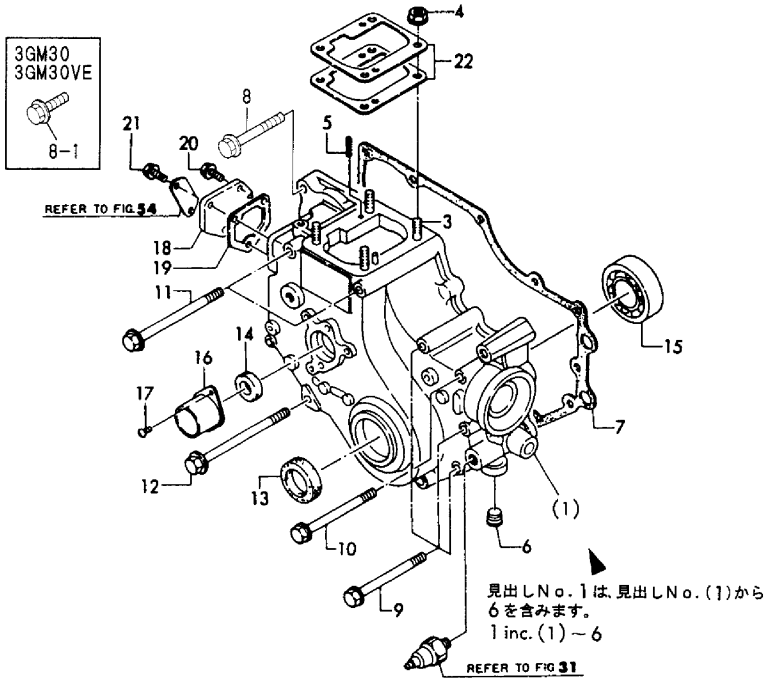

(A)=3GM30 (B)=3GM30VE (C)=3GM30B (D)=3GM30C (E)=3GM30F (F)=3GM30FVE

No.	Lev.	Parts No.	Description	Q'ty (A)	(B)	(C)	(D)	(E)	(F)	I	R
1	1	728370-01610	CASE ASSY, GEAR	1	1		1				
3	2	121450-01560	BOLT, STUD M8X22	4	4		4				
4	2	26366-080002	NUT, M8	4	4		4				
5	2	22351-040010	PIN, SPRING 4.0X10	2	2		2				
6	2	124060-01050	PLUG, PT1/8	1	1		1				
7	1	121575-01510	GASKET, GEAR CASE	1			1				
7-1	1	121575-01511	GASKET, GEAR CASE	1	1		1			N	
	(A=E/#11532)		(D=E/#01203)								
8	1	26106-080602	BOLT, M8X 60 PLATED	2	2		2				
8-1	1	26106-080302	BOLT, M8X 30 PLATED	2	2					S	
	(A=*1997.01)	(B=*1997.01)									
9	1	26106-080852	BOLT, M8X 85 PLATED	5	5		5				
10	1	26106-080902	BOLT, M8X 90 PLATED	1	1		1				
11	1	26106-081152	BOLT, M8X115 PLATED	2	2		2				
12	1	26106-081152	BOLT, M8X115 PLATED	2	2		2				
13	1	121450-01800	SEAL, OIL	1			1				
13-1	1	121450-01801	SEAL, OIL TC25408	1	1		1			N	
	(A=E/#11483)		(D=E/#01177)								
14	1	128270-01820	SEAL, SC16286	1	1		1				
15	1	24101-063050	BEARING, BALL 6305C3	1	1		1				
16	1	128170-01830	COVER	1	1		1				
17	1	26557-060102	SCREW, M6X10	2	2		2				
18	1	121000-01850	COVER, BLOCK	1	1		1				
19	1	121575-01860	GASKET	1			1				
19-1	1	121575-01861	GASKET	1	1		1			N	
	(A=E/#11532)		(D=E/#01203)								
20	1	26106-060122	BOLT, M6X 12 PLATED	1	1		1				
21	1	26106-060142	BOLT, M6X 14 PLATED	2	2		2				
22	1	121450-01951	SHIM SET, ADJUSTING	1	1		1				

N:Old ←Yes/No→ New, Q:Old ←No/Yes→ New, R:Old ←Yes/Yes→ New, S:Old ←No/No→ New, W:Add, Z:Discontinued, F:Interchangeable by set, K:Q'ty Change

Copyright (C) YANMAR CO., LTD. All RightsReserved.

Fig.4. GEAR HOUSING

P/C NEWS No:Y00F5062-2
PUBLISHED:2000/11

Fig.4 ギヤケース GEAR HOUSING

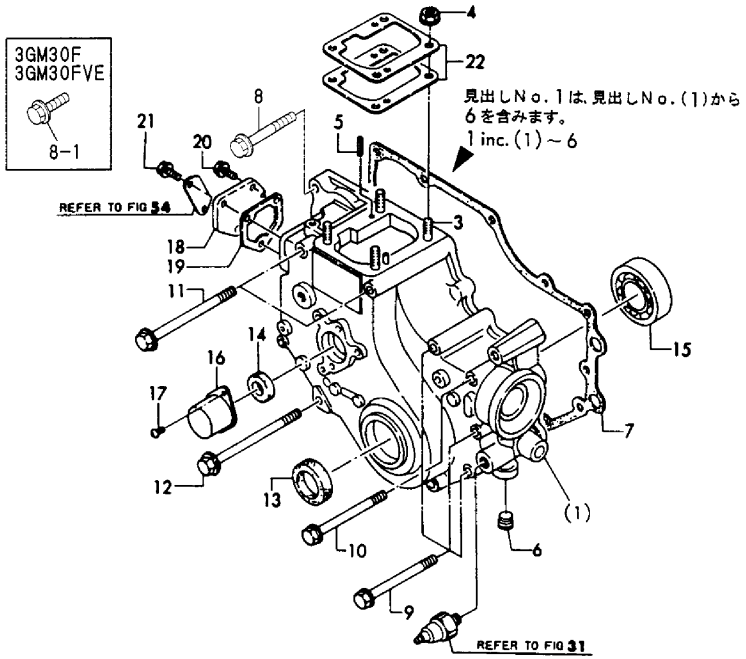

(A)=3GM30
(B)=3GM30VE
(C)=3GM30B
(D)=3GM30C
(E)=3GM30F
(F)=3GM30FVE

No.	Lev.	Parts No.	Description	Q'ty (A)	(B)	(C)	(D)	(E)	(F)	I	R
1	1	728370-01610	CASE ASSY, GEAR			1		1	1		
3	2	121450-01560	BOLT, STUD M8X22			4		4	4		
4	2	26366-080002	NUT, M8			4		4	4		
5	2	22351-040010	PIN, SPRING 4.0X10			2		2	2		
6	2	124060-01050	PLUG, PT1/8			1		1	1		
7	1	121575-01510	GASKET, GEAR CASE			1		1			
7-1	1	121575-01511	GASKET, GEAR CASE			1		1	1	N	
			(C=E/#00343)	(E=E/#11515)							
8	1	26106-080602	BOLT, M8X 60 PLATED			2		2	2		
8-1	1	26106-080302	BOLT, M8X 30 PLATED					2	2	S	
				(E=*1997.01)				(F=*1997.01)			
9	1	26106-080852	BOLT, M8X 85 PLATED			5		5	5		
10	1	26106-080902	BOLT, M8X 90 PLATED			1		1	1		
11	1	26106-081152	BOLT, M8X115 PLATED			2		2	2		
12	1	26106-081152	BOLT, M8X115 PLATED			2		2	2		
13	1	121450-01800	SEAL, OIL			1		1			
13-1	1	121450-01801	SEAL, OIL TC25408			1		1	1	N	
			(C=E/#00343)	(E=E/#11458)							
14	1	128270-01820	SEAL, SC16286			1		1	1		
15	1	24101-063050	BEARING, BALL 6305C3			1		1	1		
16	1	128670-01830	COVER			1		1	1		
17	1	26557-060102	SCREW, M6X10			2		2	2		
18	1	121000-01850	COVER, BLOCK			1		1	1		
19	1	121575-01860	GASKET			1		1			
19-1	1	121575-01861	GASKET			1		1	1	N	
			(C=E/#00343)	(E=E/#11515)							
20	1	26106-060122	BOLT, M6X 12 PLATED			1		1	1		
21	1	26106-060142	BOLT, M6X 14 PLATED			2		2	2		
22	1	121450-01951	SHIM SET, ADJUSTING			1		1	1		

N:Old $\xleftarrow[\text{No}]{\text{Yes}}$ New, Q:Old $\xleftarrow[\text{Yes}]{\text{No}}$ New, R:Old $\xleftarrow[\text{Yes}]{\text{Yes}}$ New, S:Old $\xleftarrow[\text{No}]{\text{No}}$ New, W:Add, Z:Discontinued, F:Interchangeable by set, K:Q'ty Change

Copyright (C) YANMAR CO., LTD. All RightsReserved.

Fig.5. LUB. OIL SUMP

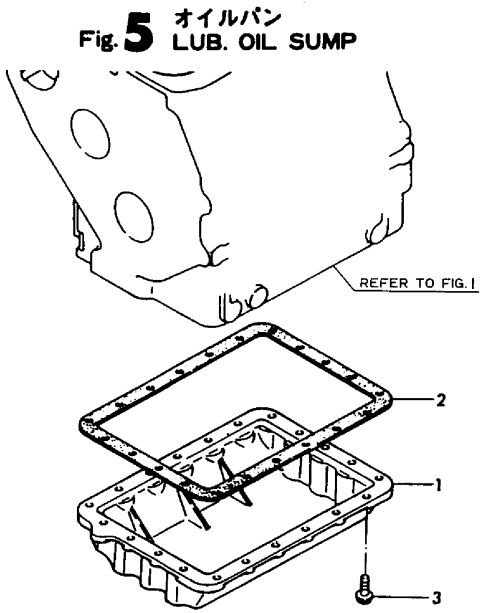

(A)=3GM30
(B)=3GM30VE
(C)=3GM30B
(D)=3GM30C
(E)=3GM30F
(F)=3GM30FVE

No.	Lev.	Parts No.	Description	Q'ty (A)	(B)	(C)	(D)	(E)	(F)	I	R
1	1	128370-01720	SUMP, OIL	1	1	1	1	1	1		
2-1	1	121450-01751	GASKET, OIL SUMP	1	1	1	1	1	1		1
3	1	26014-060202	BOLT, M6X 20	21	21	21	21	21	21		

Remarks
1)CORRECTION OF PART NUMBER.
(PREVIOUS P/NO. IS 121000-01751)

N:Old $\xleftarrow[\text{No}]{\text{Yes}}$ New, Q:Old $\xleftarrow[\text{Yes}]{\text{No}}$ New, R:Old $\xleftrightarrow[\text{Yes}]{\text{Yes}}$ New, S:Old $\xleftrightarrow[\text{No}]{\text{No}}$ New, W:Add, Z:Discontinued, F:Interchangeable by set, K:Q'ty Change

Copyright (C) YANMAR CO., LTD. All RightsReserved.

Fig.6. FLYWHEEL HOUSING

(A)=3GM30
(B)=3GM30VE
(C)=3GM30B
(D)=3GM30C
(E)=3GM30F
(F)=3GM30FVE

Fig.6 フライホイールハウジング FLYWHEEL HOUSING

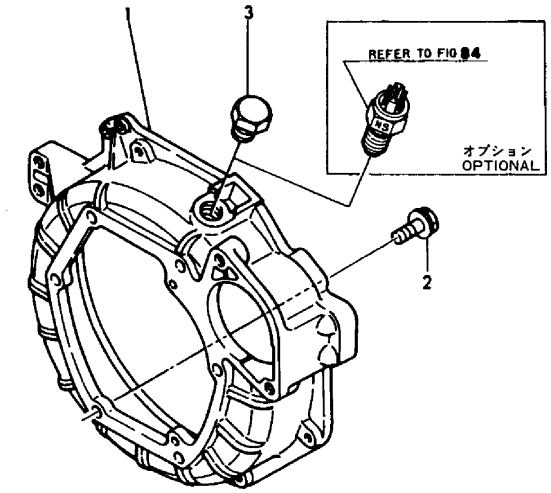

No.	Lev.	Parts No.	Description	Q'ty (A)	(B)	(C)	(D)	(E)	(F)	I	R
1	1	128170-01600	FLANGE, MOUNTING	1	1	1		1	1		
2	1	26106-100252	BOLT, M10X 25 PLATED	6	6	6		6	6		
3	1	23887-180002	PLUG, 18	1	1	1		1	1		

N:Old $\xleftrightarrow[\text{No}]{\text{Yes}}$ New, Q:Old $\xleftrightarrow[\text{Yes}]{\text{No}}$ New, R:Old $\xleftrightarrow[\text{Yes}]{\text{Yes}}$ New, S:Old $\xleftrightarrow[\text{No}]{\text{No}}$ New, W:Add, Z:Discontinued, F:Interchangeable by set, K:Q'ty Change

Copyright (C) YANMAR CO., LTD. All RightsReserved.

Fig.7. FLYWHEEL HOUSING

Fig. 7 フライホイールハウジング
FLYWHEEL HOUSING

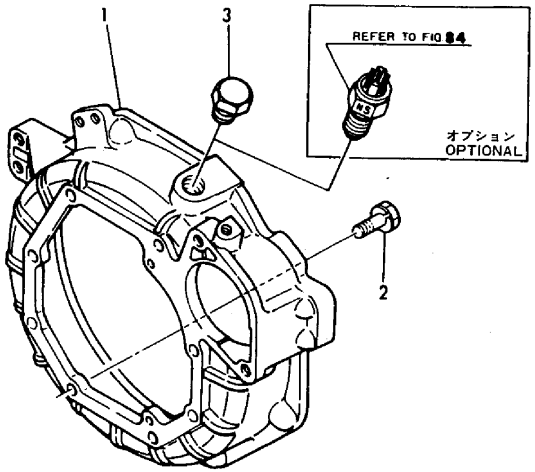

(A)=3GM30
(B)=3GM30VE
(C)=3GM30B
(D)=3GM30C
(E)=3GM30F
(F)=3GM30FVE

No.	Lev.	Parts No.	Description	Q'ty (A)	(B)	(C)	(D)	(E)	(F)	I	R
1	1	128371-01601	HOUSING, FLYWHEEL				1				
2	1	26013-100252	BOLT, SPRING M10X 25				8				
3	1	23887-180002	PLUG, 18				1				

N:Old $\frac{\text{Yes}}{\text{No}}$ New, Q:Old $\frac{\text{No}}{\text{Yes}}$ New, R:Old $\frac{\text{Yes}}{\text{Yes}}$ New, S:Old $\frac{\text{No}}{\text{No}}$ New, W:Add, Z:Discontinued, F:Interchangeable by set, K:Q'ty Change

Copyright (C) YANMAR CO., LTD. All RightsReserved.

Fig.8. MAIN BEARING HOUSING

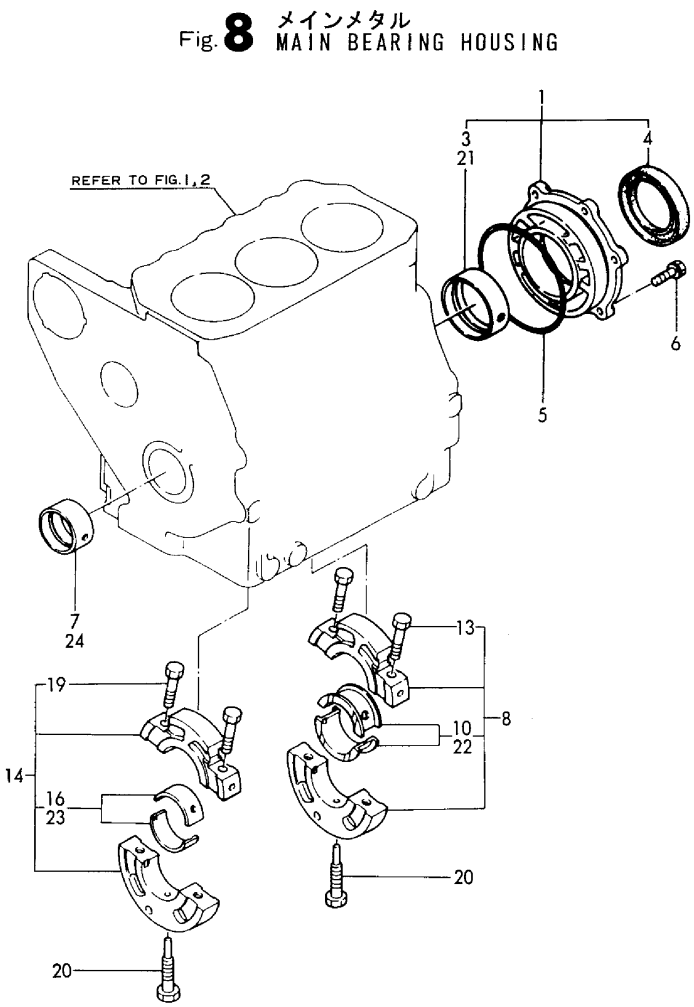

(A)=3GM30
(B)=3GM30VE
(C)=3GM30B
(D)=3GM30C
(E)=3GM30F
(F)=3GM30FVE

No.	Lev.	Parts No.	Description	Q'ty (A)	(B)	(C)	(D)	(E)	(F)	I	R
1	1	721450-02500	HOUSING ASSY, METAL	1	1	1	1	1	1		
3	2	121450-02110	BEARING, MAIN	1	1	1	1	1	1		
4	2	124085-02220	SEAL, OIL	1	1	1	1	1	1		
5	1	105225-02020	O-RING	1	1	1	1	1	1		
6	1	26013-080202	BOLT, SPRING M8X 20	6	6	6	6	6	6		
7	1	121450-02100	BEARING, MAIN	1	1	1	1	1	1		
8	1	721450-02611	HOUSING ASSY	1	1	1	1	1	1		
10	2	121450-02160	BEARING, MAIN	1	1	1	1	1	1		
13	2	121450-02071	BOLT	2	2	2	2	2	2		
14	1	721450-02621	HOUSING ASSY	1	1	1	1	1	1		
16	2	121450-02170	BEARING, MAIN	1	1	1	1	1	1		
19	2	121450-02071	BOLT	2	2	2	2	2	2		
20	1	105225-02300	BOLT	2	2	2	2	2	2		
21	1	121450-02320	METAL ASSY, 0.25	1	1	1	1	1	1		1
22	1	121450-02370	BEARING, 0.25 US	1	1	1	1	1	1		1
23	1	121450-02380	BEARING, 0.25 US	1	1	1	1	1	1		1
24	1	121450-02310	BEARING, 0.25 US	1	1	1	1	1	1		1

Remarks
1)UMDER-SIZED PART.(0.25)

N:Old $\xleftarrow[\text{No}]{\text{Yes}}$ New, Q:Old $\xleftarrow[\text{Yes}]{\text{No}}$ New, R:Old $\xleftarrow[\text{Yes}]{\text{Yes}}$ New, S:Old $\xleftarrow[\text{No}]{\text{No}}$ New, W:Add, Z:Discontinued, F:Interchangeable by set, K:Q'ty Change

Copyright (C) YANMAR CO., LTD. All RightsReserved.

Fig.9. BREATHER

(A)=3GM30
(B)=3GM30VE
(C)=3GM30B
(D)=3GM30C
(E)=3GM30F
(F)=3GM30FVE

No.	Lev.	Parts No.	Description	Q'ty (A)	(B)	(C)	(D)	(E)	(F)	I	R
1	1	121000-03020	COVER, BREATHER	1	1	1	1	1	1		
2	1	121000-03070	GASKET	1	1	1	1	1	1		
3	1	26106-060252	BOLT, M6X 25 PLATED	4	4	4	4	4	4		
4	1	121000-03200	PIPE , BREATHER	1	1	1	1	1	1		
5	1	23080-013000	CLAMP, 13	2	2	2	2	2	2		
6	1	121000-03080	PLATE, SHELTER	1	1	1	1	1	1		
7	1	26557-050102	SCREW, M5X10	2	2	2	2	2	2		
8	1	22217-050000	WASHER, SPRING 5	2	2	2	2	2	2		

Fig. 9 ブリーザ BREATHER

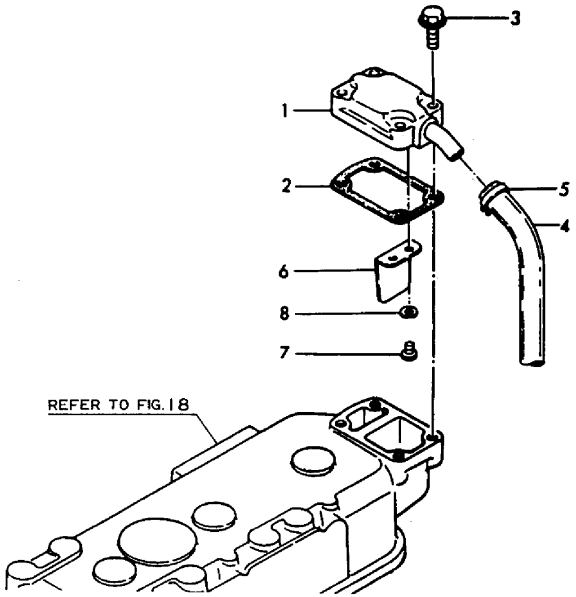

N:Old ←Yes/No→ New, Q:Old ←No/Yes→ New, R:Old ←Yes/Yes→ New, S:Old ←No/No→ New, W:Add, Z:Discontinued, F:Interchangeable by set, K:Q'ty Change

Copyright (C) YANMAR CO., LTD. All RightsReserved.

Fig.10. LABEL

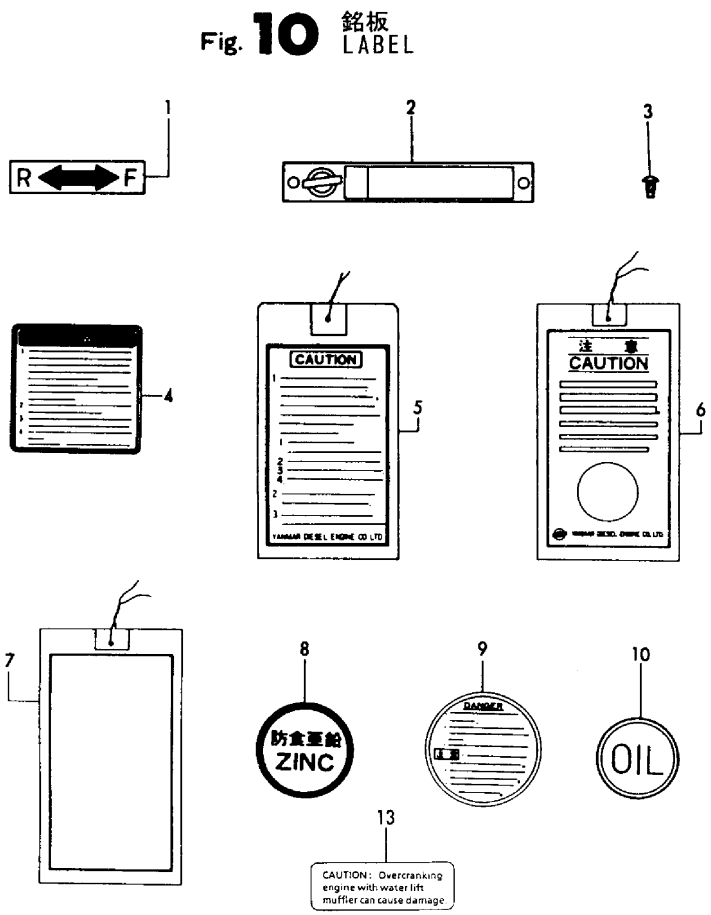

(A)=3GM30 (B)=3GM30VE (C)=3GM30B (D)=3GM30C (E)=3GM30F (F)=3GM30FVE

No.	Lev.	Parts No.	Description	Q'ty (A)	(B)	(C)	(D)	(E)	(F)	I	R
1	1	177088-02430	LABEL	1		1		1			
2	1	105582-07061	LABEL			1					
3	1	102210-07990	RIVET			2					
4	1	127611-07350	LABEL					1			
4-1	1	129198-07350	LABEL					1	1	N	
				(E=E08792)							
5	1	126630-07370	LABEL					1	1		
6	1	123682-07850	LABEL, CAUTION					1	1		
7	1	128170-07850	LABEL, CAUTION	1	1		1				
8	1	124220-09340	LABEL	3	3	3	3				
9	1	120445-44620	LABEL, CAUTION					1	1		
10	1	42222-003550	LABEL	1				1		Z	
	(A=EXXX)				(E=EXXX)						
13	1	128171-07150	LABEL	1	1		1	1	1	W	
	(A=E14382)				(E=E14395)						

N:Old $\xleftarrow[\text{No}]{\text{Yes}}$ New, Q:Old $\xleftarrow[\text{Yes}]{\text{No}}$ New, R:Old $\xleftarrow[\text{Yes}]{\text{Yes}}$ New, S:Old $\xleftarrow[\text{No}]{\text{No}}$ New, W:Add, Z:Discontinued, F:Interchangeable by set, K:Q'ty Change

Copyright (C) YANMAR CO., LTD. All RightsReserved.

Fig.11. ENGINE LIFTER

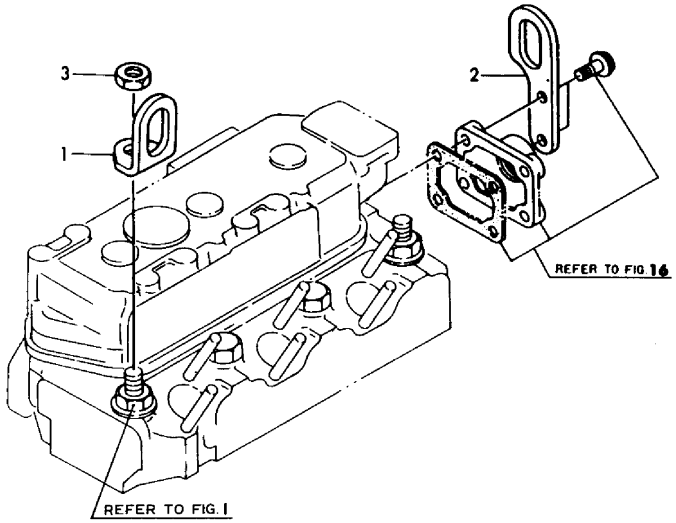

(A)=3GM30
(B)=3GM30VE
(C)=3GM30B
(D)=3GM30C
(E)=3GM30F
(F)=3GM30FVE

No.	Lev.	Parts No.	Description	Q'ty (A)	(B)	(C)	(D)	(E)	(F)	I	R
1	1	121575-07230	LIFTER	1	1	1	1				
2	1	121575-07240	LIFTER	1	1	1	1				
3	1	26776-120002	NUT, LOCK M12	1	1	1	1				

N:Old $\xleftarrow[\text{No}]{\text{Yes}}$ New, Q:Old $\xleftarrow[\text{Yes}]{\text{No}}$ New, R:Old $\xleftarrow[\text{Yes}]{\text{Yes}}$ New, S:Old $\xleftarrow[\text{No}]{\text{No}}$ New, W:Add, Z:Discontinued, F:Interchangeable by set, K:Q'ty Change

Copyright (C) YANMAR CO., LTD. All RightsReserved.

Fig.12. ENGINE LIFTER

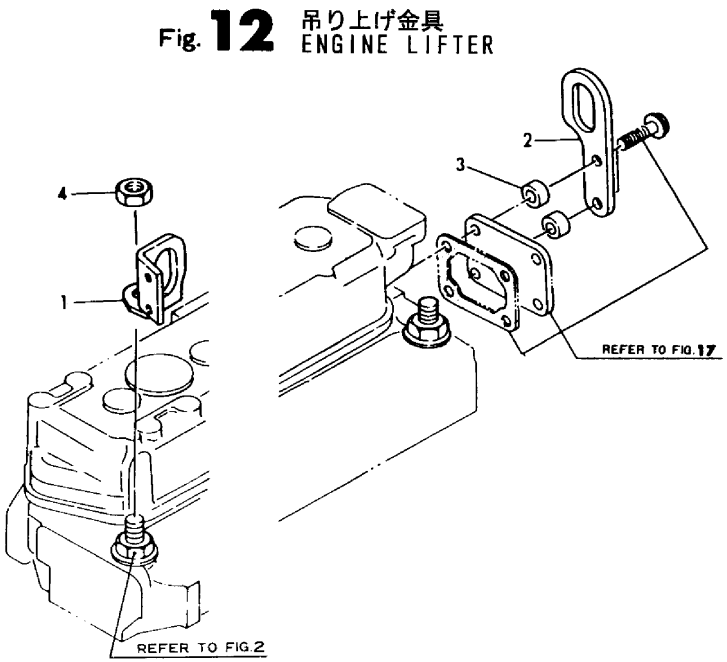

(A)=3GM30
(B)=3GM30VE
(C)=3GM30B
(D)=3GM30C
(E)=3GM30F
(F)=3GM30FVE

No.	Lev.	Parts No.	Description	Q'ty (A)	(B)	(C)	(D)	(E)	(F)	I	R
1	1	128695-07230	LIFTER					1	1		
2	1	121575-07240	LIFTER					1	1		
3	1	123372-03150	SPACER					2	2		
4	1	26776-120002	NUT, LOCK M12					1	1		

N:Old $\xleftarrow[\text{No}]{\text{Yes}}$ New, Q:Old $\xleftarrow[\text{Yes}]{\text{No}}$ New, R:Old $\xleftarrow[\text{Yes}]{\text{Yes}}$ New, S:Old $\xleftarrow[\text{No}]{\text{No}}$ New, W:Add, Z:Discontinued, F:Interchangeable by set, K:Q'ty Change

Copyright (C) YANMAR CO., LTD. All RightsReserved.

Fig.13. ENGINE BRACKET

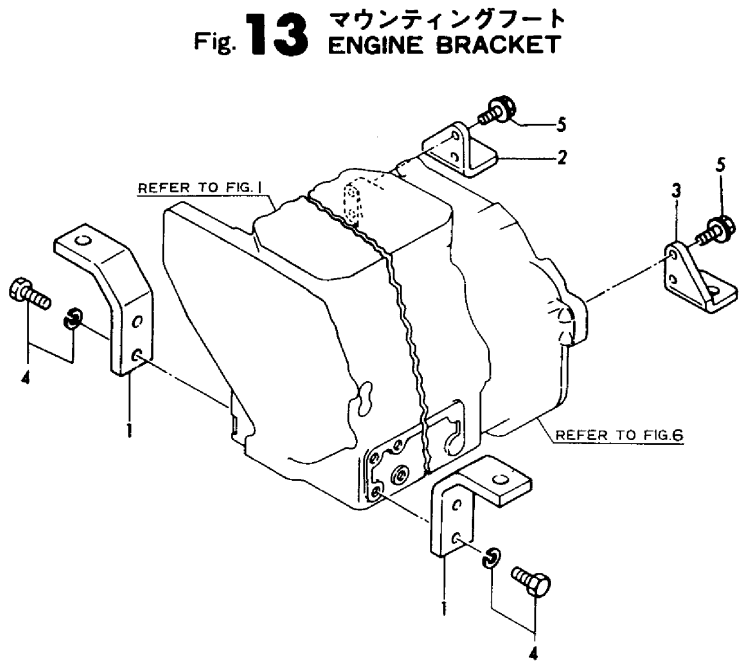

(A)=3GM30
(B)=3GM30VE
(C)=3GM30B
(D)=3GM30C
(E)=3GM30F
(F)=3GM30FVE

No.	Lev.	Parts No.	Description	Q'ty (A)	(B)	(C)	(D)	(E)	(F)	I	R
1	1	128170-08100	FOOT	2	2	2	2	2	2		
2	1	128170-08120	FOOT	1	1	1	1	1	1		
3	1	128170-08130	FOOT	1	1	1	1	1	1		
4	1	26013-120302	BOLT, SPRING M12X 30	4	4	4	4	4	4		
5	1	26106-100252	BOLT, M10X 25 PLATED	4	4	4	4	4	4		

N:Old $\overset{\text{Yes}}{\underset{\text{No}}{\rightleftarrows}}$ New, Q:Old $\overset{\text{No}}{\underset{\text{Yes}}{\rightleftarrows}}$ New, R:Old $\overset{\text{Yes}}{\underset{\text{Yes}}{\rightleftarrows}}$ New, S:Old $\overset{\text{No}}{\underset{\text{No}}{\rightleftarrows}}$ New, W:Add, Z:Discontinued, F:Interchangeable by set, K:Q'ty Change

Copyright (C) YANMAR CO., LTD. All RightsReserved.

Fig.14. FLEXIBLE MOUNT

Fig. 14 フレキシブルマウント FLEXIBLE MOUNT

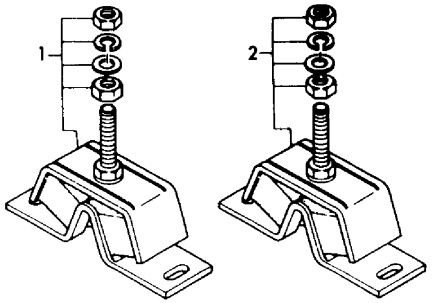

(A)=3GM30 (B)=3GM30VE (C)=3GM30B (D)=3GM30C (E)=3GM30F (F)=3GM30FVE

No.	Lev.	Parts No.	Description	Q'ty (A)	(B)	(C)	(D)	(E)	(F)	I	R
1	1	124772-08341	MOUNT, FLEXIBLE 100	2	4	2	2	2	4		
2	1	128270-08341	MOUNT, FLEXIBLE 75	2		2	2	2			

N:Old ◄Yes/No► New, Q:Old ◄No/Yes► New, R:Old ◄Yes/Yes► New, S:Old ◄No/No► New, W:Add, Z:Discontinued, F:Interchangeable by set, K:Q'ty Change

Copyright (C) YANMAR CO., LTD. All RightsReserved.

Fig.15. ANTI-CORROSIVE ZINC

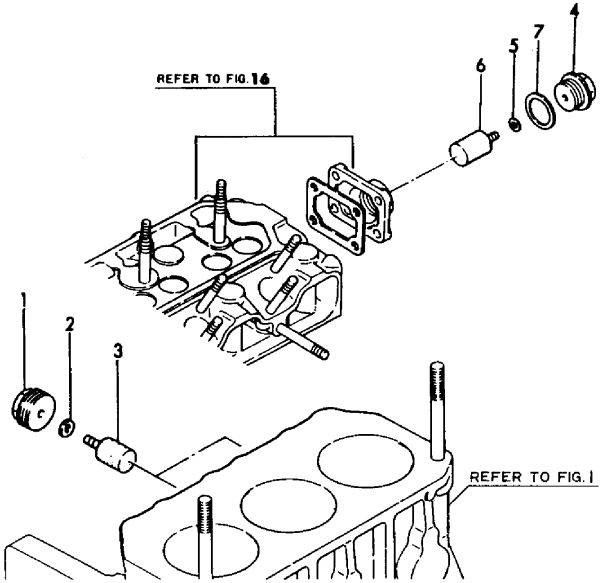

(A)=3GM30
(B)=3GM30VE
(C)=3GM30B
(D)=3GM30C
(E)=3GM30F
(F)=3GM30FVE

No.	Lev.	Parts No.	Description	Q'ty (A)	(B)	(C)	(D)	(E)	(F)	I	R
1	2	128270-09300	PLUG, NPTF1	2	2	2	2				
2	2	123210-09310	GASKET	2	2	2	2				
3	2	27210-200300	ZINC, SCREW20X30	2	2	2	2				
4	2	122780-09320	PLUG	1	1	1	1				
5	2	123210-09310	GASKET	1	1	1	1				
6	2	27210-200300	ZINC, SCREW20X30	1	1	1	1				
7	2	23414-250000	GASKET, 25X1.0	1	1	1	1				

N:Old $\xleftrightarrow[\text{No}]{\text{Yes}}$ New, Q:Old $\xleftrightarrow[\text{Yes}]{\text{No}}$ New, R:Old $\xleftrightarrow[\text{Yes}]{\text{Yes}}$ New, S:Old $\xleftrightarrow[\text{No}]{\text{No}}$ New, W:Add, Z:Discontinued, F:Interchangeable by set, K:Q'ty Change

Copyright (C) YANMAR CO., LTD. All RightsReserved.

Fig.16. CYLINDER HEAD

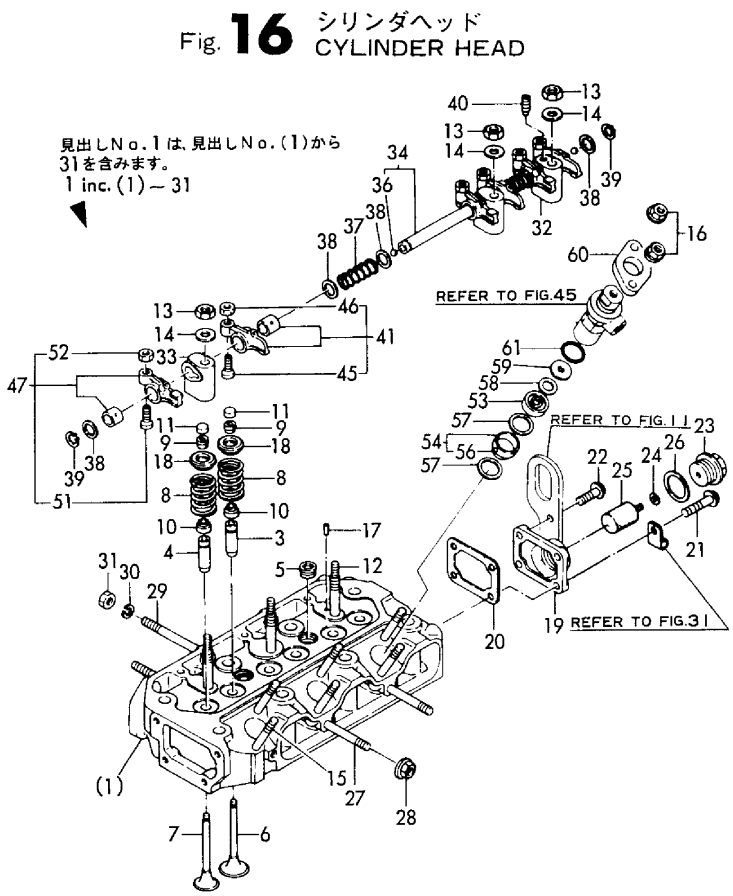

(A)=3GM30 (B)=3GM30VE (C)=3GM30B (D)=3GM30C (E)=3GM30F (F)=3GM30FVE

No.	Lev.	Parts No.	Description	Q'ty (A)	(B)	(C)	(D)	(E)	(F)	I	R
1	1	728372-11700	HEAD ASSY, CYLINDER	1	1	1	1				
3	3	124060-11160	GUIDE, VALVE	3	3	3	3				
4	3	128272-11170	GUIDE, VALVE	3	3	3	3				
5	3	23871-030000	PLUG, R03	2	2	2	2				
6	2	105225-11100	VALVE, INTAKE	3	3	3	3				
7	2	105225-11110	VALVE, EXHAUST	3	3	3	3				
8	2	121575-11121	SPRING, VALVE	6	6	6	6				
9	2	101158-11190	COTTER	12	12	12	12				
9-1	2	27310-070001	COTTER, 7	6	6	6	6			N	
	(A=EXXXXX)	(B=EXXXXX)	(C=EXXXXX) (D=EXXXXX)								
10	2	124950-11340	SEAL, VALVE STEM	6	6	6	6				
11	2	104211-11370	CAP, VALVE	6	6	6	6				
12	2	105225-11350	STUD	3	3	3	3				
13	2	26696-100002	NUT, LOCK M10	3	3	3	3				
14	2	22137-100000	WASHER, 10	3	3	3	3				
15	2	26216-080652	STUD, M8X 65	6	6	6	6				
16	2	26366-080002	NUT, M8	6	6	6	6				
17	2	121000-11050	PIN, 4.5X12	1	1	1	1				
18	2	104200-11180	RETAINER, SPRING	6	6	6	6				
19	2	121575-11670	COVER, HEAD	1	1	1	1				
20	2	121450-11680	GASKET	1		1	1				
20-1	2	121450-11681	GASKET	1	1	1	1			N	
	(A=E11532)		(C=E00343) (D=E01203)								
21	2	26106-080302	BOLT, M8X 30 PLATED	2	2	2	2				
22	2	26106-080302	BOLT, M8X 30 PLATED	2	2	2	2				
23	2	122780-09320	PLUG	1	1	1	1				
24	2	123210-09310	GASKET	1	1	1	1				
25	2	27210-200300	ZINC, SCREW20X30	1	1	1	1				
26	2	23414-250000	GASKET, 25X1.0	1	1	1	1				
27	2	26217-080552	STUD M 8X 55 PLATED	2	2	2	2				
28	2	26366-080002	NUT, M8	2	2	2	2				
29	2	128670-13350	STUD, M8X80	2	2	2	2				
30	2	22217-080000	WASHER, SPRING 8	6	6	6	6				
31	2	26703-080002	NUT, M8	2	2	2	2				
32	1	121450-11260	SUPPORT, ROCKER ARM	1	1	1	1				
33	1	121450-11270	SUPPORT, ROCKER ARM	2	2	2	2				
34	1	121450-11240	SHAFT ASSY, ROCKER	1	1	1	1				
36	2	24190-110001	BALL, STEEL 11/32	2	2	2	2				
37	1	121550-11280	SPRING	2	2	2	2				
38	1	121550-11290	WASHER	6	6	6	6				
39	1	22242-000140	RING, 14	2	2	2	2				
40	1	26921-080102	SCREW, M8X10	1	1	1	1				
41	1	721450-11650	ARM ASSY, ROCKER	3	3	3	3				
45	2	101158-11230	SCREW, VALVE ADJUST	3	3	3	3				
46	2	26756-080002	NUT, LOCK M8	3	3	3	3				
47	1	721450-11660	ARM ASSY, ROCKER	3	3	3	3				
51	2	101158-11230	SCREW, VALVE ADJUST	3	3	3	3				
52	2	26756-080002	NUT, LOCK M8	3	3	3	3				
53	1	128275-11410	CHAMBER	3	3	3	3				
54	1	105311-11420	CHAMBER	3	3	3	3				
56	2	103338-11430	PIN	3	3	3	3				

N:Old $\overset{\text{Yes}}{\underset{\text{No}}{\leftrightarrow}}$ New, Q:Old $\overset{\text{No}}{\underset{\text{Yes}}{\leftrightarrow}}$ New, R:Old $\overset{\text{Yes}}{\underset{\text{Yes}}{\leftrightarrow}}$ New, S:Old $\overset{\text{No}}{\underset{\text{No}}{\leftrightarrow}}$ New, W:Add, Z:Discontinued, F:Interchangeable by set, K:Q'ty Change

++ CONTINUE ++

Copyright (C) YANMAR CO., LTD. All RightsReserved.

Fig.16. CYLINDER HEAD

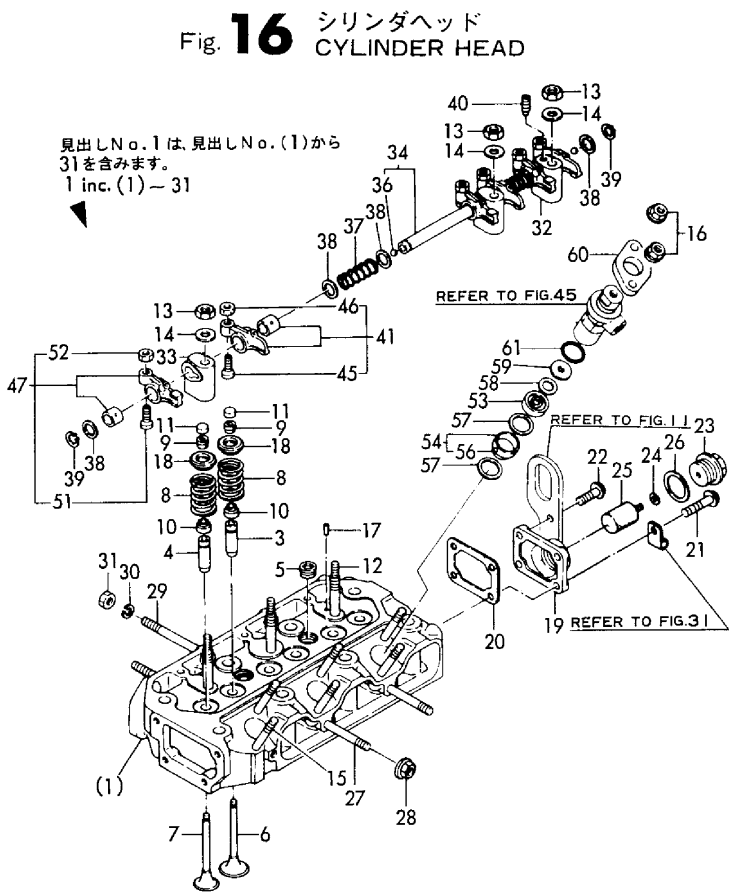

(A)=3GM30
(B)=3GM30VE
(C)=3GM30B
(D)=3GM30C
(E)=3GM30F
(F)=3GM30FVE

No.	Lev.	Parts No.	Description	Q'ty (A)	(B)	(C)	(D)	(E)	(F)	I	R
57	1	124950-11450	GASKET, CHAMBER	6	6	6	6				
58	1	128275-11490	HEAT INSULATOR	3	3	3	3				
59	1	128275-11500	COVER	3	3	3	3				
60	1	101147-11900	RETAINER	3	3	3	3				
61	1	24341-000260	O-RING, 1AS26.0	3	3	3	3				

N:Old ◄Yes/No► New, Q:Old ◄No/Yes► New, R:Old ◄Yes/Yes► New, S:Old ◄No/No► New, W:Add, Z:Discontinued, F:Interchangeable by set, K:Q'ty Change

Copyright (C) YANMAR CO., LTD. All RightsReserved.

Fig.17. CYLINDER HEAD

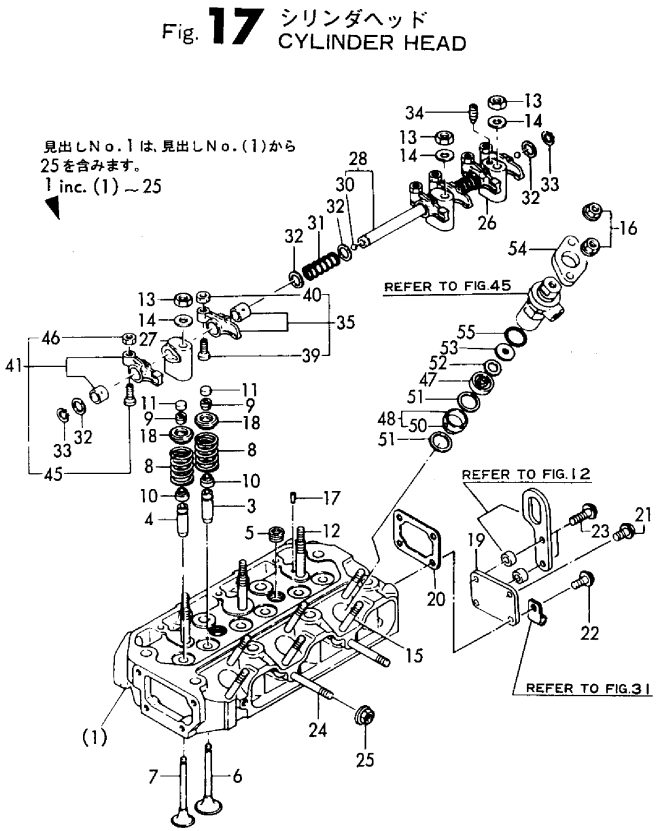

(A)=3GM30
(B)=3GM30VE
(C)=3GM30B
(D)=3GM30C
(E)=3GM30F
(F)=3GM30FVE

No.	Lev.	Parts No.	Description	Q'ty (A)	(B)	(C)	(D)	(E)	(F)	I	R
1	1	728372-11700	HEAD ASSY, CYLINDER					1	1		1
3	3	124060-11160	GUIDE, VALVE					3	3		
4	3	128272-11170	GUIDE, VALVE					3	3		
5	3	23871-030000	PLUG, R03					2	2		
6	2	105225-11100	VALVE, INTAKE					3	3		
7	2	105225-11110	VALVE, EXHAUST					3	3		
8	2	121575-11121	SPRING, VALVE					6	6		
9	2	101158-11190	COTTER					12	12		
9-1	2	27310-070001	COTTER, 7					6	6	N	
				(E=*2007.11.)				(F=*2007.11.)			
10	2	124950-11340	SEAL, VALVE STEM					6	6		
11	2	104211-11370	CAP, VALVE					6	6		
12	2	105225-11350	STUD					3	3		
13	2	26696-100002	NUT, LOCK M10					3	3		
14	2	22137-100000	WASHER, 10					3	3		
15	2	26216-080652	STUD, M8X 65					6	6		
16	2	26366-080002	NUT, M8					6	6		
17	2	121000-11050	PIN, 4.5X12					1	1		
18	2	104200-11180	RETAINER, SPRING					6	6		
19	2	121450-11670	COVER, HEAD					1	1		
20	2	121450-11680	GASKET					1			
20-1	2	121450-11681	GASKET					1	1	N	
				(E=E11515)							
21	2	26106-080122	BOLT, M8X 12 PLATED					1	1		
22	2	26106-080142	BOLT, M8X 14 PLATED					1	1		
23	2	26106-080252	BOLT, M8X 25 PLATED					2	2		
24	2	26217-080552	STUD M 8X 55 PLATED					2	2		
25	2	26366-080002	NUT, M8					2	2		
26	1	121450-11260	SUPPORT, ROCKER ARM					1	1		
27	1	121450-11270	SUPPORT, ROCKER ARM					2	2		
28	1	121450-11240	SHAFT ASSY, ROCKER					1	1		
30	2	24190-110001	BALL, STEEL 11/32					2	2		
31	1	121550-11280	SPRING					2	2		
32	1	121550-11290	WASHER					6	6		
33	1	22242-000140	RING, 14					2	2		
34	1	26921-080102	SCREW, M8X10					1	1		
35	1	721450-11650	ARM ASSY, ROCKER					3	3		
39	2	101158-11230	SCREW, VALVE ADJUST					3	3		
40	2	26756-080002	NUT, LOCK M8					3	3		
41	1	721450-11660	ARM ASSY, ROCKER					3	3		
45	2	101158-11230	SCREW, VALVE ADJUST					3	3		
46	2	26756-080002	NUT, LOCK M8					3	3		
47	1	128275-11410	CHAMBER					3	3		
48	1	105311-11420	CHAMBER					3	3		
50	2	103338-11430	PIN					3	3		
51	1	124950-11450	GASKET, CHAMBER					6	6		
52	1	128275-11490	HEAT INSULATOR					3	3		
53	1	128275-11500	COVER					3	3		
54	1	101147-11900	RETAINER					3	3		
55	1	24341-000260	O-RING, 1AS26.0					3	3		

Remarks
(1)The cylinder head will be supplied with zinc.(Same as Fig.16 No.1)
On replacing the head, please also arrange the related clear-water cooler attaching bolt if necessary.
(The size is different.)

N:Old $\overset{\text{Yes}}{\underset{\text{No}}{\leftrightarrow}}$ New, Q:Old $\overset{\text{No}}{\underset{\text{Yes}}{\leftrightarrow}}$ New, R:Old $\overset{\text{Yes}}{\underset{\text{Yes}}{\leftrightarrow}}$ New, S:Old $\overset{\text{No}}{\underset{\text{No}}{\leftrightarrow}}$ New, W:Add, Z:Discontinued, F:Interchangeable by set, K:Q'ty Change

Copyright (C) YANMAR CO., LTD. All RightsReserved.

Fig.18. BONNET

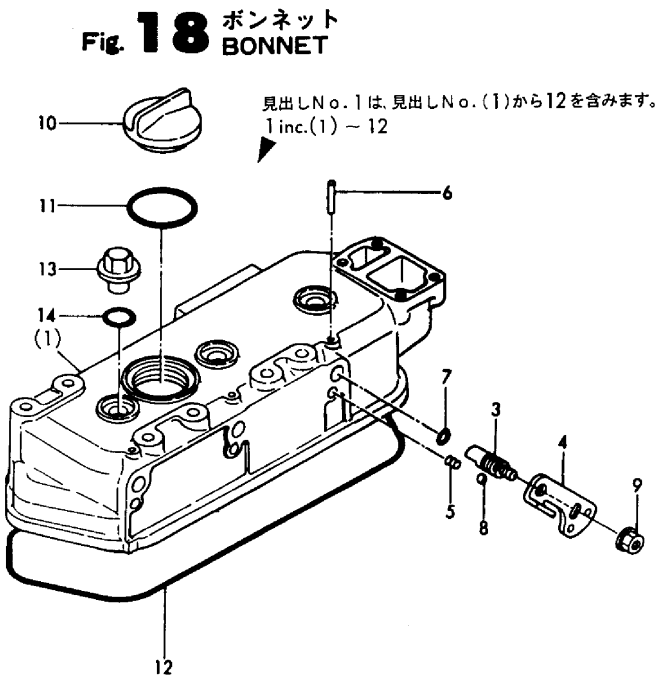

(A)=3GM30 (B)=3GM30VE (C)=3GM30B (D)=3GM30C (E)=3GM30F (F)=3GM30FVE

No.	Lev.	Parts No.	Description	Q'ty (A)	(B)	(C)	(D)	(E)	(F)	I	R
1	1	728370-11520	BONNET ASSY, HEAD	1	1	1	1	1	1		
3	2	128270-03610	SHAFT, DECOMPRESSION	3	3	3	3	3	3		
4	2	128270-03750	LEVER, DECOMPRESSION	3	3	3	3	3	3		
5	2	128270-03640	SPRING,DECOMPRESSION	3	3	3	3	3	3		
6	2	22312-030220	PIN, PARALLEL M3X22	3	3	3	3	3	3		
7	2	24311-000070	O-RING, 1AP7.0	3	3	3	3	3	3		
8	2	24190-080001	BALL, STEEL 1/4	3	3	3	3	3	3		
9	2	26366-060002	NUT, M6	3	3	3	3	3	3		
10	2	124160-01751	CAP, FILLER	1	1	1	1	1	1		
11	2	24321-000350	O-RING, 1AG35.0	1	1	1	1	1	1		
12	2	121450-11310	GASKET, BONNET	1	1	1	1	1	1		
13	1	124160-11360	KNOB	3	3	3	3	3	3		
14	1	24311-000120	O-RING, 1AP12.0	3	3	3	3	3	3		

N:Old $\frac{\text{Yes}}{\text{No}}$ New, Q:Old $\frac{\text{No}}{\text{Yes}}$ New, R:Old $\frac{\text{Yes}}{\text{Yes}}$ New, S:Old $\frac{\text{No}}{\text{No}}$ New, W:Add, Z:Discontinued, F:Interchangeable by set, K:Q'ty Change

Copyright (C) YANMAR CO., LTD. All RightsReserved.

Fig.19. AIR INTAKE SILENCER

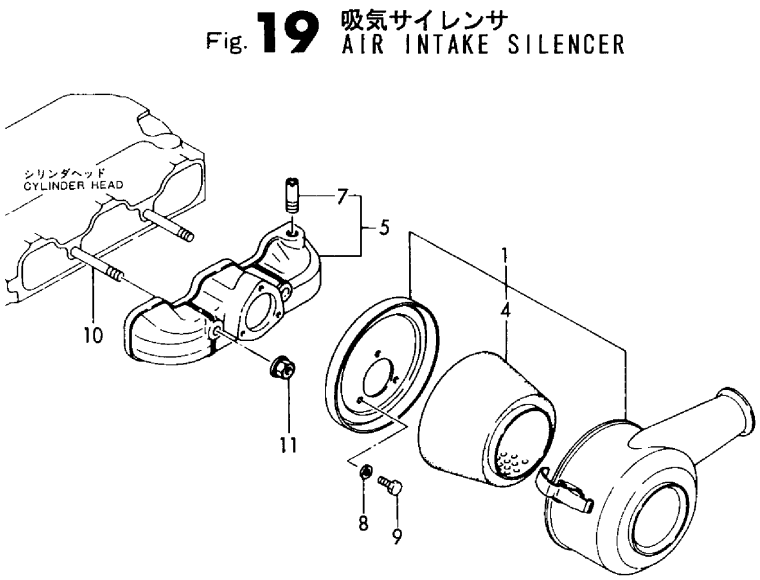

(A)=3GM30 (D)=3GM30C
(B)=3GM30VE (E)=3GM30F
(C)=3GM30B (F)=3GM30FVE

No.	Lev.	Parts No.	Description	Q'ty (A)	(B)	(C)	(D)	(E)	(F)	I	R
1	1	128270-12500	SILENCER ASSY	1	1	1	1	1	1		
4	2	128270-12540	ELEMENT	1	1	1	1	1	1		
5	1	128370-12730	MANIFOLD ASSY,INTAKE	1	1	1	1	1	1		
7	2	124770-11770	JOINT, PIPE PT1/8	1	1	1	1	1	1		
8	1	22117-060000	WASHER, 6	3	3	3	3	3	3		
9	1	26013-060142	BOLT, M6X 14	3	3	3	3	3	3		
10	1	26217-080552	STUD M 8X 55 PLATED	2	2	2	2	2	2		
11	1	26366-080002	NUT, M8	2	2	2	2	2	2		

N:Old $\overset{\text{Yes}}{\underset{\text{No}}{\leftrightarrows}}$ New, Q:Old $\overset{\text{No}}{\underset{\text{Yes}}{\leftrightarrows}}$ New, R:Old $\overset{\text{Yes}}{\underset{\text{Yes}}{\leftrightarrows}}$ New, S:Old $\overset{\text{No}}{\underset{\text{No}}{\leftrightarrows}}$ New, W:Add, Z:Discontinued, F:Interchangeable by set, K:Q'ty Change

Copyright (C) YANMAR CO., LTD. All RightsReserved.

Fig.20. EXHAUST MANIFOLD

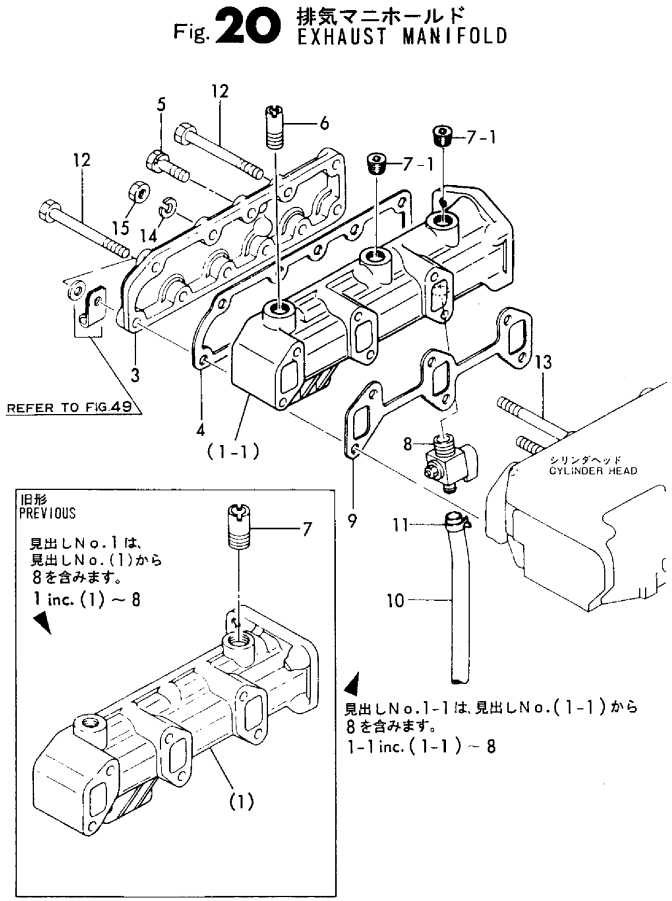

(A)=3GM30 (B)=3GM30VE (C)=3GM30B (D)=3GM30C (E)=3GM30F (F)=3GM30FVE

No.	Lev.	Parts No.	Description	Q'ty (A)	(B)	(C)	(D)	(E)	(F)	I	R
1	1	728370-13500	MANIFOLD ASSY	1		1	1				
1-1	1	728370-13501	MANIFOLD ASSY	1	1	1	1			F	1
	(A=E01538)		(C=E00133) (D=E00212)								
3	2	128370-13160	COVER, MANIFOLD	1	1	1	1				
4	2	128370-13180	GASKET	1		1	1				
4-1	2	128370-13181	GASKET	1	1	1	1			N	
	(A=E11532)		(C=E00343) (D=E01203)								
5	2	26013-080252	BOLT, SPRING M8X 25	5	5	5	5				
6	2	127610-42130	JOINT, PIPE	1	1	1	1				
7	2	121575-49300	JOINT, PIPE	1		1	1				
7-1	2	23871-030000	PLUG, R03	2	2	2	2			S	
	(A=E01538)		(C=E00133) (D=E00212)								
8	2	104200-11920	COCK, WATER	1	1	1	1				
9	1	121450-13250	GASKET	1		1	1				
9-1	1	121450-13251	GASKET, MANIFOLD	1	1	1	1			N	
	(A=E11532)		(C=E00343) (D=E01203)								
10	1	23061-100300	PIPE, 10X 300	1	1	1	1				
11	1	124223-49750	CLIP, HOSE 13	1	1	1	1				
12	1	26115-080802	BOLT, M8X 80	4	4	4	4				
13	1	128670-13350	STUD, M8X80	2	2	2	2				
14	1	22217-080000	WASHER, SPRING 8	6	6	6	6				
15	1	26703-080002	NUT, M8	2	2	2	2				

Remarks
1) INTERCHANGEABLE BY SIMULTANEOUS REPLACEMENT WITH JOINT(121575-49300),SPACER(128370-13220) & GASKET(128370-13230).

N:Old ←Yes/No→ New, Q:Old ←No/Yes→ New, R:Old ←Yes/Yes→ New, S:Old ←No/No→ New, W:Add, Z:Discontinued, F:Interchangeable by set, K:Q'ty Change

Copyright (C) YANMAR CO., LTD. All RightsReserved.

Fig.21. MIXING ELBOW

(A)=3GM30
(B)=3GM30VE
(C)=3GM30B
(D)=3GM30C
(E)=3GM30F
(F)=3GM30FVE

No.	Lev.	Parts No.	Description	Q'ty (A)	(B)	(C)	(D)	(E)	(F)	I	R
1	1	128370-13200	GASKET	1		1	1	1	1		
1-1	1	128370-13230	GASKET	1		1	1			S	
	(A=E01538)		(C=E00133) (D=E00212)								
1-2	1	128370-13231	GASKET	1	1	1	1			S	
	(A=E05446)		(C=E00215) (D=E00123)								
1-3	1	128370-13201	GASKET					1	1	N	
				(E=E11515)							
2	1	128370-13530	ELBOW	1		1	1	1	1		
2-1	1	128370-13550	ELBOW	1	1	1	1			S	
	(A=E01538)		(C=E00133) (D=E00212)								
3	1	22217-080000	WASHER, SPRING 8	4	4	4	4	4	4		
4	1	26203-080202	BOLT, M8X 20 PLATED	4	4	4	4	4	4		

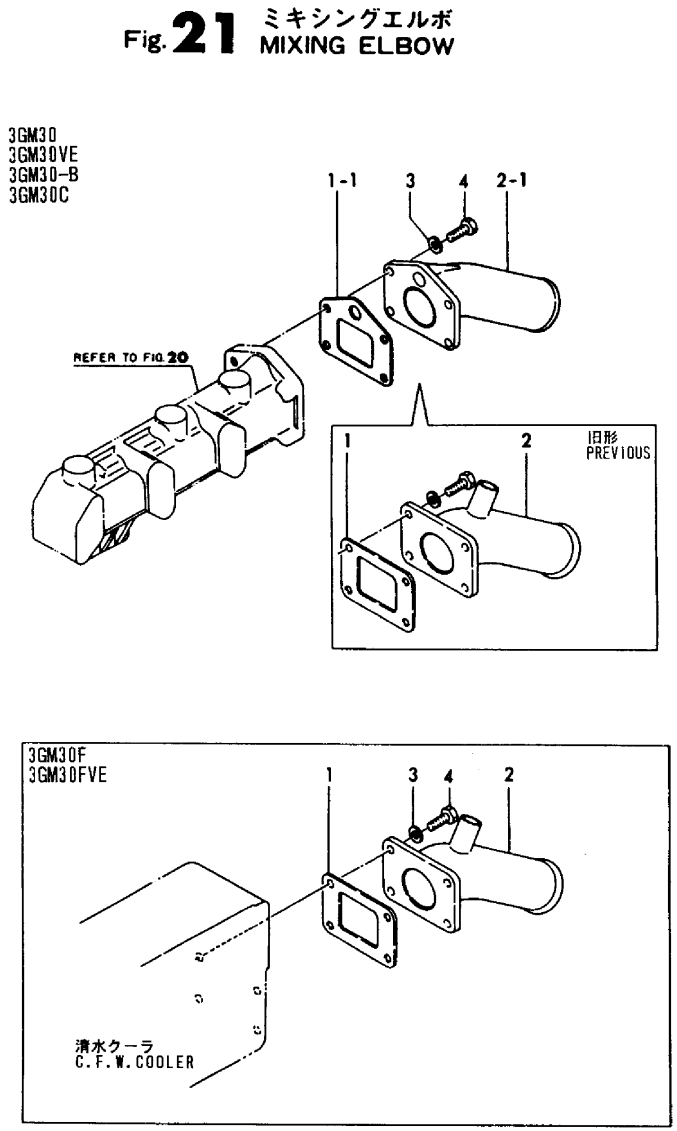

N:Old ⇄(Yes/No) New, Q:Old ⇄(No/Yes) New, R:Old ⇄(Yes/Yes) New, S:Old ⇄(No/No) New, W:Add, Z:Discontinued, F:Interchangeable by set, K:Q'ty Change

Copyright (C) YANMAR CO., LTD. All RightsReserved.

Fig.22. CAMSHAFT

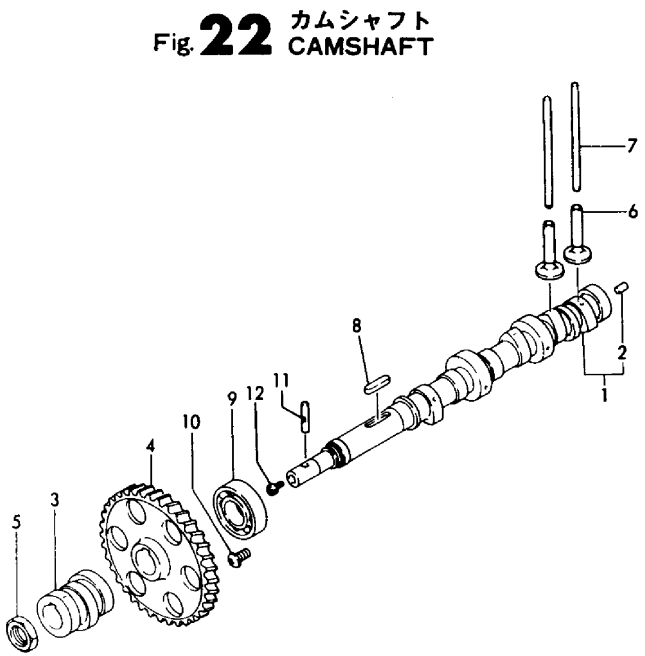

(A)=3GM30
(B)=3GM30VE
(C)=3GM30B
(D)=3GM30C
(E)=3GM30F
(F)=3GM30FVE

No.	Lev.	Parts No.	Description	Q'ty (A)	(B)	(C)	(D)	(E)	(F)	I	R
1	1	128370-14010	CAMSHAFT	1	1		1				
2	2	121000-14550	PLUG	1	1		1				
3	1	121575-14090	CAM, FUEL	1	1		1				
4	1	129350-14100	GEAR, CAMSHAFT	1	1		1				
5	1	128170-14150	NUT, CAM	1	1		1				
6	1	104200-14200	TAPPET	6	6		6				
7	1	121450-14400	ROD, PUSH	6	6		6				
8	1	22512-070300	KEY, 7X 30	1	1		1				
9	1	24101-062054	BEARING, BALL 6205	1	1		1				
10	1	26587-080122	SCREW, M8X12	1	1		1				
11	1	124070-14760	PIN	1	1		1				
12	1	26450-050102	BOLT, M5X 10	1	1		1				

N:Old $\overset{\text{Yes}}{\underset{\text{No}}{\leftrightarrows}}$ New, Q:Old $\overset{\text{No}}{\underset{\text{Yes}}{\leftrightarrows}}$ New, R:Old $\overset{\text{Yes}}{\underset{\text{Yes}}{\leftrightarrows}}$ New, S:Old $\overset{\text{No}}{\underset{\text{No}}{\leftrightarrows}}$ New, W:Add, Z:Discontinued, F:Interchangeable by set, K:Q'ty Change

Copyright (C) YANMAR CO., LTD. All RightsReserved.

Fig.23. CAMSHAFT

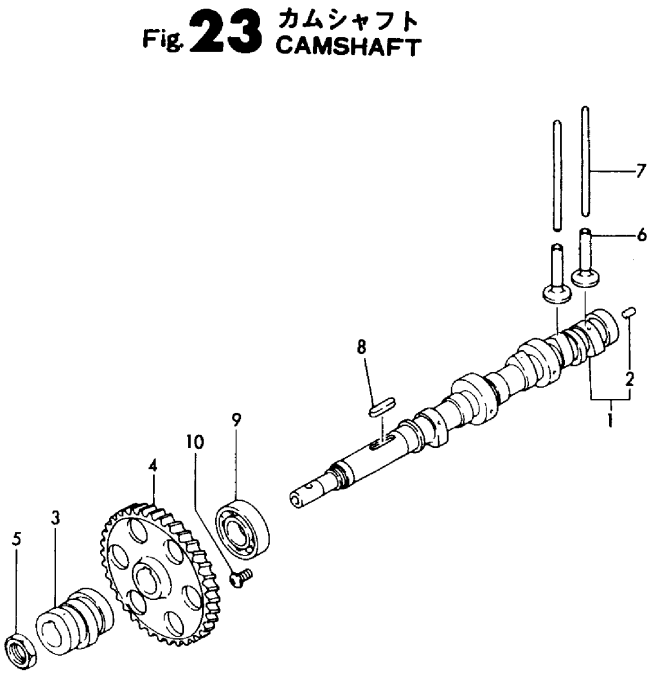

(A)=3GM30 (B)=3GM30VE (C)=3GM30B (D)=3GM30C (E)=3GM30F (F)=3GM30FVE

No.	Lev.	Parts No.	Description	Q'ty (A)	(B)	(C)	(D)	(E)	(F)	I	R
1	1	128370-14010	CAMSHAFT			1		1	1		
2	2	121000-14550	PLUG			1		1	1		
3	1	121575-14090	CAM, FUEL			1		1	1		
4	1	129350-14100	GEAR, CAMSHAFT			1		1	1		
5	1	128170-14150	NUT, CAM			1		1	1		
6	1	104200-14200	TAPPET			6		6	6		
7	1	121450-14400	ROD, PUSH			6		6	6		
8	1	22512-070300	KEY, 7X 30			1		1	1		
9	1	24101-062054	BEARING, BALL 6205			1		1	1		
10	1	26587-080122	SCREW, M8X12			1		1	1		

N:Old $\xleftrightarrow[\text{No}]{\text{Yes}}$ New, Q:Old $\xleftrightarrow[\text{Yes}]{\text{No}}$ New, R:Old $\xleftrightarrow[\text{Yes}]{\text{Yes}}$ New, S:Old $\xleftrightarrow[\text{No}]{\text{No}}$ New, W:Add, Z:Discontinued, F:Interchangeable by set, K:Q'ty Change

Copyright (C) YANMAR CO., LTD. All RightsReserved.

Fig.24. CRANKSHAFT & FLYWHEEL

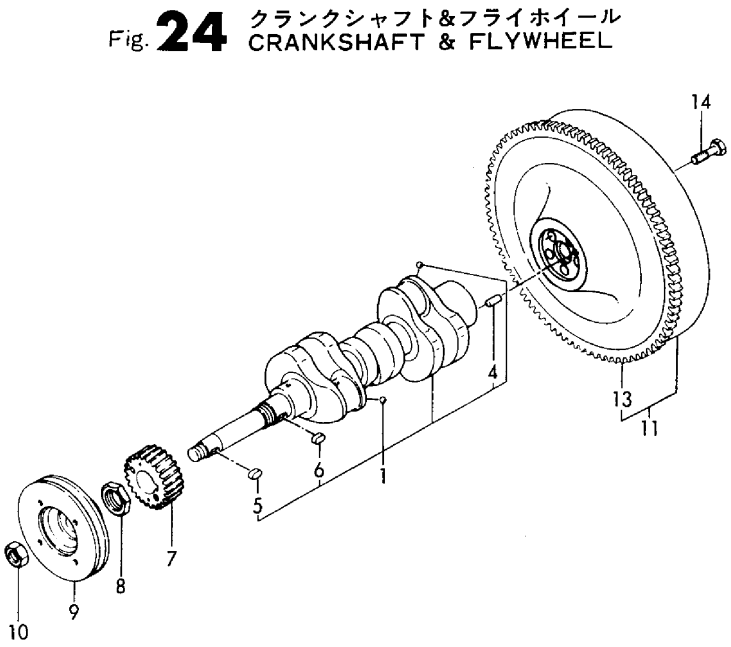

(A)=3GM30 (D)=3GM30C
(B)=3GM30VE (E)=3GM30F
(C)=3GM30B (F)=3GM30FVE

No.	Lev.	Parts No.	Description	Q'ty (A)	(B)	(C)	(D)	(E)	(F)	I	R
1	1	721085-21701	CRANKSHAFT ASSY	1	1	1	1	1	1		
4	2	22312-080160	PIN, PARALLEL M8X16	1	1	1	1	1	1		
5	2	22512-070180	KEY, 7X 18	1	1	1	1	1	1		
6	2	22512-070180	KEY, 7X 18	1	1	1	1	1	1		
7	1	129350-21200	GEAR, CRANKSHAFT	1	1	1	1	1	1		
8	1	121450-21540	NUT, CRANKSHAFT GEAR	1		1	1	1			
8-1	1	121450-21541	NUT, CRANKSHAFT GEAR	1	1	1	1	1	1	N	
	(A=*1982.07)		(C=*1982.07) (D=*1982.07) (E=*1982.07)								
9	1	128370-21650	V-PULLEY	1	1	1	1	1	1		
10	1	26776-180002	NUT, LOCK M18	1	1	1	1	1	1		
11	1	128371-21590	FLYWHEEL ASSY	1	1	1	1	1	1		
13	2	124950-21600	GEAR, RING	1	1	1	1	1	1		
14	1	121574-21500	BOLT, FLYWHEEL 10 45	5	5	5	5	5	5		

N:Old $\frac{\text{Yes}}{\text{No}}$ New, Q:Old $\frac{\text{No}}{\text{Yes}}$ New, R:Old $\frac{\text{Yes}}{\text{Yes}}$ New, S:Old $\frac{\text{No}}{\text{No}}$ New, W:Add, Z:Discontinued, F:Interchangeable by set, K:Q'ty Change

Copyright (C) YANMAR CO., LTD. All RightsReserved.

Fig.25. PIST0N

P/C NEWS No:Y00F5062-2
PUBLISHED:2000/11

Fig. 25 ピストン PISTON

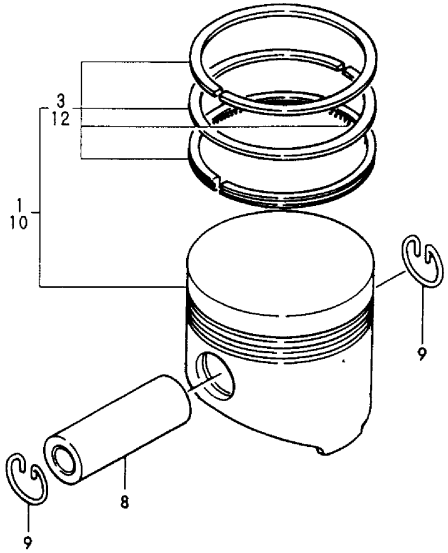

(A)=3GM30 (B)=3GM30VE (C)=3GM30B (D)=3GM30C (E)=3GM30F (F)=3GM30FVE

No.	Lev.	Parts No.	Description	Q'ty (A)	(B)	(C)	(D)	(E)	(F)	I	R
1	1	105311-22090	PISTON ASSY, S	3	3	3	3	3	3		
3	2	705311-22500	RING SET, PISTON	3	3	3	3	3	3		
8	1	105225-22300	PIN, PISTON	3	3	3	3	3	3		
9	1	105225-22400	CIRCLIP	6	6	6	6	6	6		
10	1	128171-22250	PISTON ASSY, 0.25 OS	3	3	3	3	3	3		1
12	2	705325-22540	RING SET, 0.25 OS	3	3	3	3	3	3		1

Remarks
(1)OVER SIZED(O.S=0.25)PART.

N:Old ←Yes/No→ New, Q:Old ←No/Yes→ New, R:Old ←Yes/Yes→ New, S:Old ←No/No→ New, W:Add, Z:Discontinued, F:Interchangeable by set, K:Q'ty Change

Copyright (C) YANMAR CO., LTD. All RightsReserved.

Fig.26. CONNECTING ROD

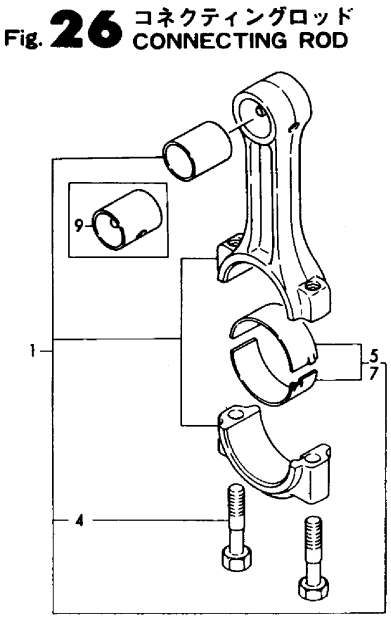

(A)=3GM30 (B)=3GM30VE (C)=3GM30B (D)=3GM30C (E)=3GM30F (F)=3GM30FVE

No.	Lev.	Parts No.	Description	Q'ty (A)	(B)	(C)	(D)	(E)	(F)	I	R
1	1	728171-23100	ROD ASSY, CONNECTING	3	3	3	3	3	3		
4	2	105225-23200	BOLT, CONNECTING ROD	6	6	6	6	6	6		
5	2	705311-23600	BEARING, CRANK PIN	3	3	3	3	3	3		
7	1	105311-23380	METAL ASSY, 0.25	3	3	3	3	3	3		1
9	1	105225-23180	BEARING, PISTON PIN	3	3	3	3	3	3		2

Remarks
(1) UNDER-SIZED PART.
(2) REPAIR PART.

N:Old $\xleftrightarrow[\text{No}]{\text{Yes}}$ New, Q:Old $\xleftrightarrow[\text{Yes}]{\text{No}}$ New, R:Old $\xleftrightarrow[\text{Yes}]{\text{Yes}}$ New, S:Old $\xleftrightarrow[\text{No}]{\text{No}}$ New, W:Add, Z:Discontinued, F:Interchangeable by set, K:Q'ty Change

Copyright (C) YANMAR CO., LTD. All RightsReserved.

Fig.27. LUB. OIL PUMP

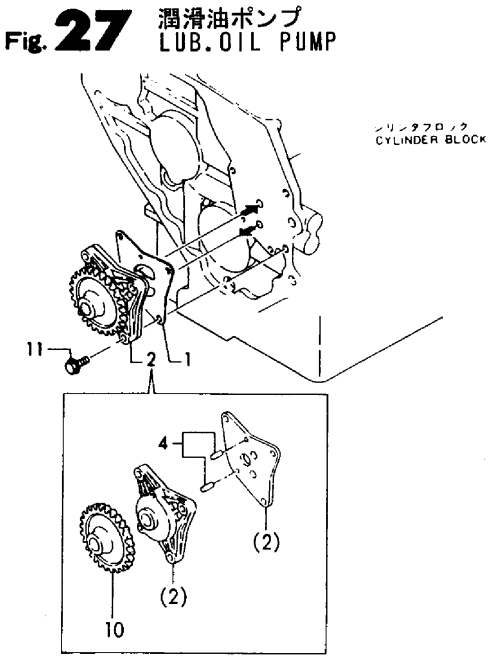

(A)=3GM30 (B)=3GM30VE (C)=3GM30B (D)=3GM30C (E)=3GM30F (F)=3GM30FVE

No.	Lev.	Parts No.	Description	Q'ty (A)	(B)	(C)	(D)	(E)	(F)	I	R
1	1	121450-32021	GASKET, PUMP	1	1	1	1	1	1		
2	1	121575-32090	PUMP ASSY, OIL	1	1	1	1	1	1		
4	2	121450-32050	PIN	2		2	2	2			
4-1	2	121450-32050	PIN	1	1	1	1	1	1	K	
	(A=E02448)		(C=E00158) (D=E00106)	(E=E02340)							
4A	2	121450-32060	PIN, 4X8	1	1	1	1	1	1	W	
	(A=E02448)		(C=E00158) (D=E00106)	(E=E02340)							
10	2	121450-32200	GEAR, OIL PUMP	1	1	1	1	1	1		
11	1	26013-060222	BOLT, M6X 22	3	3	3	3	3	3		

N:Old ◄Yes/No► New, Q:Old ◄No/Yes► New, R:Old ◄Yes/Yes► New, S:Old ◄No/No► New, W:Add, Z:Discontinued, F:Interchangeable by set, K:Q'ty Change

Copyright (C) YANMAR CO., LTD. All RightsReserved.

Fig.28. LUB. OIL DIPSTICK

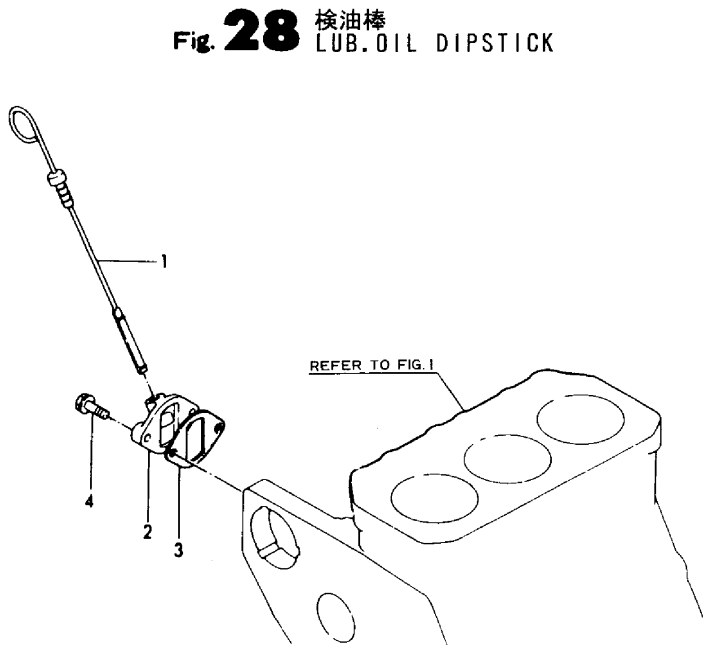

(A)=3GM30 (B)=3GM30VE (C)=3GM30B (D)=3GM30C (E)=3GM30F (F)=3GM30FVE

No.	Lev.	Parts No.	Description	Q'ty (A)	(B)	(C)	(D)	(E)	(F)	I	R
1	1	128370-34800	DIPSTICK, OIL	1	1	1	1	1	1		
2	1	121575-34830	BRACKET	1	1	1	1	1	1		
3	1	124160-34844	GASKET	1		1	1	1			
3-1	1	124160-34845	GASKET	1	1	1	1	1	1	N	
	(A=E11532)		(C=E00343) (D=E01203)	(E=E11515)							
4	1	26106-080252	BOLT, M8X 25 PLATED	2	2	2	2	2	2		

N:Old $\xleftarrow[\text{No}]{\text{Yes}}$ New, Q:Old $\xleftarrow[\text{Yes}]{\text{No}}$ New, R:Old $\xleftarrow[\text{Yes}]{\text{Yes}}$ New, S:Old $\xleftarrow[\text{No}]{\text{No}}$ New, W:Add, Z:Discontinued, F:Interchangeable by set, K:Q'ty Change

Copyright (C) YANMAR CO., LTD. All RightsReserved.

Fig.29. LUB. OIL STRAINER

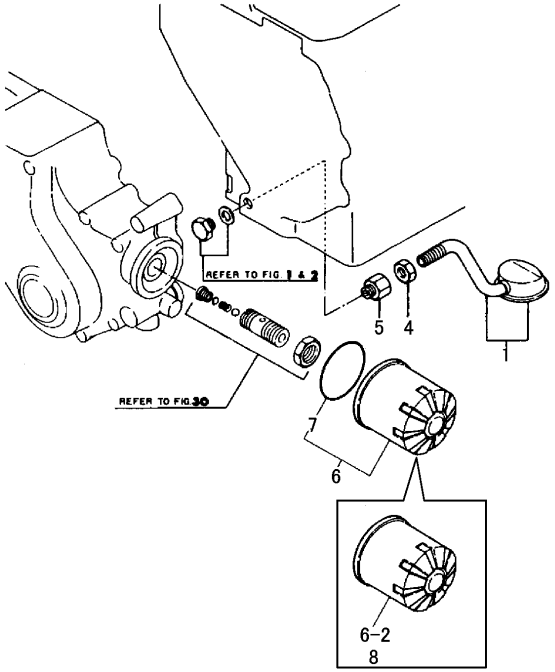

(A)=3GM30 (B)=3GM30VE (C)=3GM30B (D)=3GM30C (E)=3GM30F (F)=3GM30FVE

No.	Lev.	Parts No.	Description	Q'ty (A)	(B)	(C)	(D)	(E)	(F)	I	R
1	1	121450-35090	PIPE ASSY, OIL INLET	1	1	1	1	1	1		
4	1	124450-35070	NUT, PF1/4	1	1	1	1	1	1		
5	1	121150-35100	BRACKET	1	1	1	1	1	1		
6	1	124450-35100	FILTER, OIL	1		1	1	1			
6-1	1	119660-35150	FILTER, LUB. OIL	1		1	1	1		N	
	(A=E11532)		(C=E00343) (D=E01203)	(E=E11515)							
6-2	1	119305-35151	FILTER ASSY, D68XL65	1	1	1	1	1	1	N	1
	(A=EXXXXX)	(B=EXXXXX)	(C=EXXXXX) (D=EXXXXX)	(E=EXXXXX)				(F=EXXXXX)			
7	2	124450-35110	O-RING	1	1	1	1	1	1	Z	
	(A=EXXXXX)	(B=EXXXXX)	(C=EXXXXX) (D=EXXXXX)	(E=EXXXXX)				(F=EXXXXX)			
8	1	119305-35170	FILTER ASSY, D68XL65	1	1	1	1	1	1	R	2

Remarks
(1)Non-branded filter(without Yanmar logo).
(2)Branded filter(with Yanmar logo).
It is interchangeable with non-branded filter.(Interchangeability : R)

N:Old $\frac{\text{Yes}}{\text{No}}$ New, Q:Old $\frac{\text{No}}{\text{Yes}}$ New, R:Old $\frac{\text{Yes}}{\text{Yes}}$ New, S:Old $\frac{\text{No}}{\text{No}}$ New, W:Add, Z:Discontinued, F:Interchangeable by set, K:Q'ty Change

Copyright (C) YANMAR CO., LTD. All RightsReserved.

Fig.30. L.O.PRESS.REGULATING VALVE

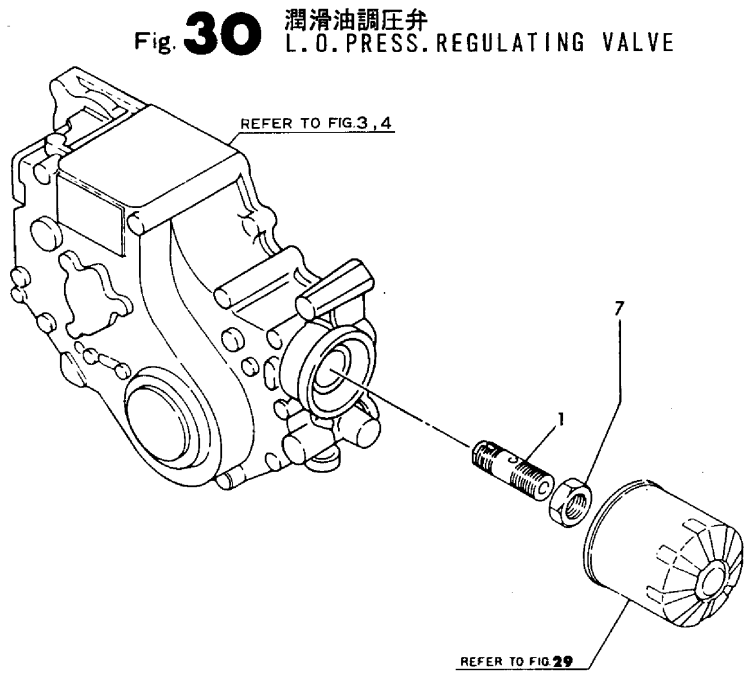

(A)=3GM30
(B)=3GM30VE
(C)=3GM30B
(D)=3GM30C
(E)=3GM30F
(F)=3GM30FVE

No.	Lev.	Parts No.	Description	Q'ty (A)	(B)	(C)	(D)	(E)	(F)	I	R
1	1	124085-35300	VALVE ASSY, CONTROL	1	1	1	1	1	1		
7	1	124085-35350	NUT, M20	1	1	1	1	1	1		

N:Old $\frac{\text{Yes}}{\text{No}}$ New, Q:Old $\frac{\text{No}}{\text{Yes}}$ New, R:Old $\frac{\text{Yes}}{\text{Yes}}$ New, S:Old $\frac{\text{No}}{\text{No}}$ New, W:Add, Z:Discontinued, F:Interchangeable by set, K:Q'ty Change

Copyright (C) YANMAR CO., LTD. All RightsReserved.

Fig.31. LUB. OIL LINE

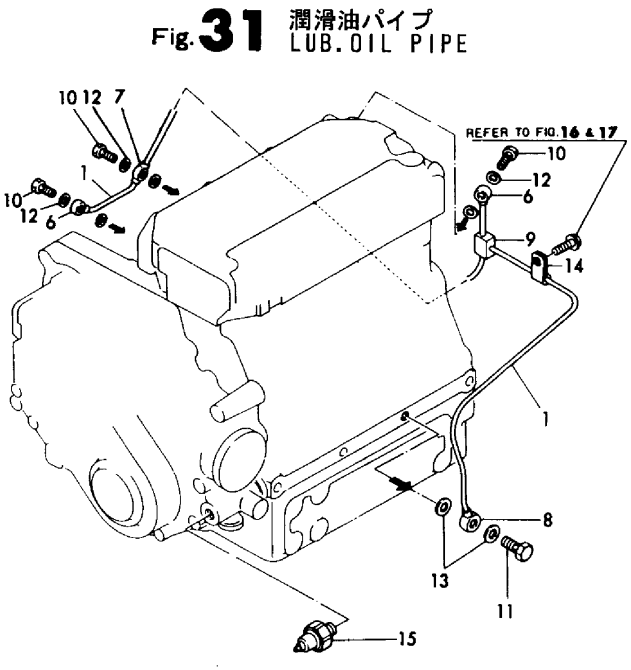

(A)=3GM30 (B)=3GM30VE (C)=3GM30B (D)=3GM30C (E)=3GM30F (F)=3GM30FVE

No.	Lev.	Parts No.	Description	Q'ty (A)	(B)	(C)	(D)	(E)	(F)	I	R
1	1	128370-39200	PIPE, OIL	1	1	1	1	1	1		
6	2	103288-39170	JOINT, PIPE	2	2	2	2	2	2		
7	2	124450-39180	JOINT, PIPE	1	1	1	1	1	1		
8	2	124160-39540	JOINT, PIPE 10	1	1	1	1	1	1		
9	2	121750-39550	JOINT, 3-WAY	1	1	1	1	1	1		
10	1	124550-59820	BOLT, PIPE JOINT M8	3	3	3	3	3	3		
11	1	124160-39140	BOLT, PIPE JOINT M10	1	1	1	1	1	1		
12	1	23414-080000	GASKET, 8X1.0	6	6	6	6	6	6		
13	1	23414-100000	GASKET, 10X1.0	2	2	2	2	2	2		
14	1	124450-39240	RETAINER, PIPE	1	1	1	1	1	1		
15	1	124060-39451	SWITCH, 0.2KG	1	1	1	1	1	1		

N:Old $\frac{\text{Yes}}{\text{No}}$ New, Q:Old $\frac{\text{No}}{\text{Yes}}$ New, R:Old $\frac{\text{Yes}}{\text{Yes}}$ New, S:Old $\frac{\text{No}}{\text{No}}$ New, W:Add, Z:Discontinued, F:Interchangeable by set, K:Q'ty Change

Copyright (C) YANMAR CO., LTD. All RightsReserved.

Fig.32. COOLING SEA WATER PUMP

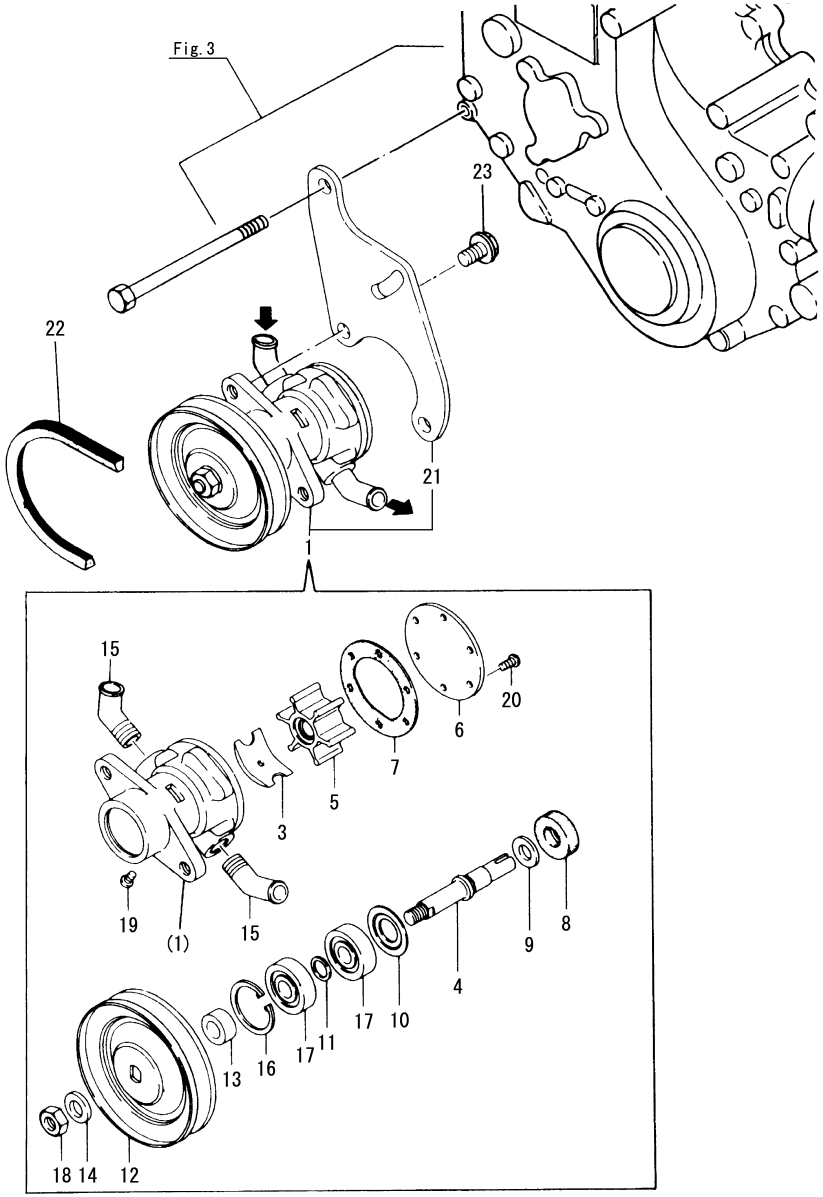

(A)=3GM30
(B)=3GM30VE
(C)=3GM30B
(D)=3GM30C
(E)=3GM30F
(F)=3GM30FVE

No.	Lev.	Parts No.	Description	Q'ty (A)	(B)	(C)	(D)	(E)	(F)	I	R
1	1	128270-42000	PUMP ASSY, WATER	1	1	1	1				
3	2	104211-42050	CAM	1	1	1	1				
4	2	124070-42060	SHAFT, IMPELLER	1	1	1	1				
5	2	104211-42070	IMPELLER	1	1	1	1				
6	2	104211-42080	COVER	1	1	1	1				
7	2	104211-42090	GASKET	1	1	1	1				
8	2	104211-42100	SEAL, TC10X25X7	1	1	1	1				
9	2	104211-42110	PLATE	1	1	1	1				
10	2	104211-42120	COVER, BEARING	1	1	1	1				
11	2	104211-42130	PIECE, DISTANCE	1	1	1	1				
12	2	124070-42400	V-PULLEY	1	1	1	1				
13	2	124070-42410	COLLAR	1	1	1	1				
14	2	124070-42420	WASHER	1	1	1	1				
15	2	128270-49300	ELBOW, 1/4	2	2	2	2				
16	2	22252-000300	RING, 30	1	1	1	1				
17	2	24107-062004	BEARING, BALL 6200ZZ	2	2	2	2				
18	2	26347-080002	NUT, M8	1	1	1	1				
19	2	26554-040062	SCREW, M4X 6	1	1	1	1				
20	2	26554-040082	SCREW, M4X 8	6	6	6	6				
21	2	128270-42150	BRACKET, PUMP	1	1	1	1				
22	1	104511-78780	V-BELT, M/19	1	1	1	1				
23	1	26106-080122	BOLT, M8X 12 PLATED	2	2	2	2				

N:Old ◄Yes/No► New, Q:Old ◄No/Yes► New, R:Old ◄Yes/Yes► New, S:Old ◄No/No► New, W:Add, Z:Discontinued, F:Interchangeable by set, K:Q'ty Change

Copyright (C) YANMAR CO., LTD. All RightsReserved.

Fig.33. COOLING SEA WATER PUMP

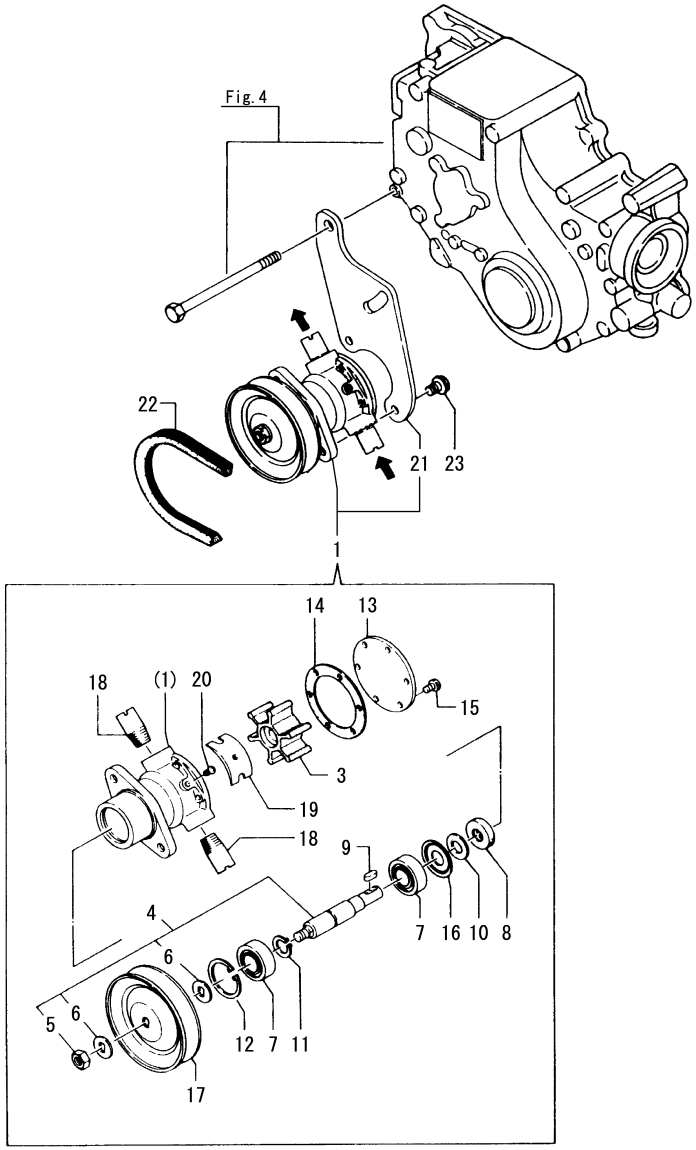

(A)=3GM30
(B)=3GM30VE
(C)=3GM30B
(D)=3GM30C
(E)=3GM30F
(F)=3GM30FVE

No.	Lev.	Parts No.	Description	Q'ty (A)	(B)	(C)	(D)	(E)	(F)	I	R
1	1	121575-42000	PUMP ASSY, WATER					1	1		
3	2	124223-42091	IMPELLER					1	1		
4	2	121575-42020	SHAFT					1	1		
5	3	26347-080002	NUT, M8					1	1		
6	3	124070-42420	WASHER					2	2		
7	2	24107-062024	BEARING, BALL 6202ZZ					2	2		
8	2	124223-42080	SEAL, TC13X28X7					1	1		
9	2	124223-42040	KEY					1	1		
10	2	124223-42070	PIECE					1	1		
11	2	22242-000150	RING, 15					1	1		
12	2	22252-000350	RING, 35					1	1		
13	2	121575-42150	COVER					1	1		
14	2	124223-42110	GASKET, WATER PUMP					1	1		
15	2	26554-040082	SCREW, M4X 8					6	6		
16	2	121575-42120	COVER, BEARING					1	1		
17	2	124070-42400	V-PULLEY					1	1		
18	2	121575-49300	JOINT, PIPE					2	2		
19	2	124323-42100	CAM, IMPELLER					1	1		
20	2	26554-040102	SCREW, M4X10					1	1		
21	2	128270-42150	BRACKET, PUMP					1	1		
22	1	104511-78780	V-BELT, M/19					1	1		
23	1	26106-080122	BOLT, M8X 12 PLATED					2	2		

N:Old $\xleftrightarrow[\text{No}]{\text{Yes}}$ New, Q:Old $\xleftrightarrow[\text{Yes}]{\text{No}}$ New, R:Old $\xleftrightarrow[\text{Yes}]{\text{Yes}}$ New, S:Old $\xleftrightarrow[\text{No}]{\text{No}}$ New, W:Add, Z:Discontinued, F:Interchangeable by set, K:Q'ty Change

Copyright (C) YANMAR CO., LTD. All RightsReserved.

Fig.34. COOLING FRESH WATER PUMP

Fig. 34 冷却水ポンプ(清水)
COOLING FRESH WATER PUMP

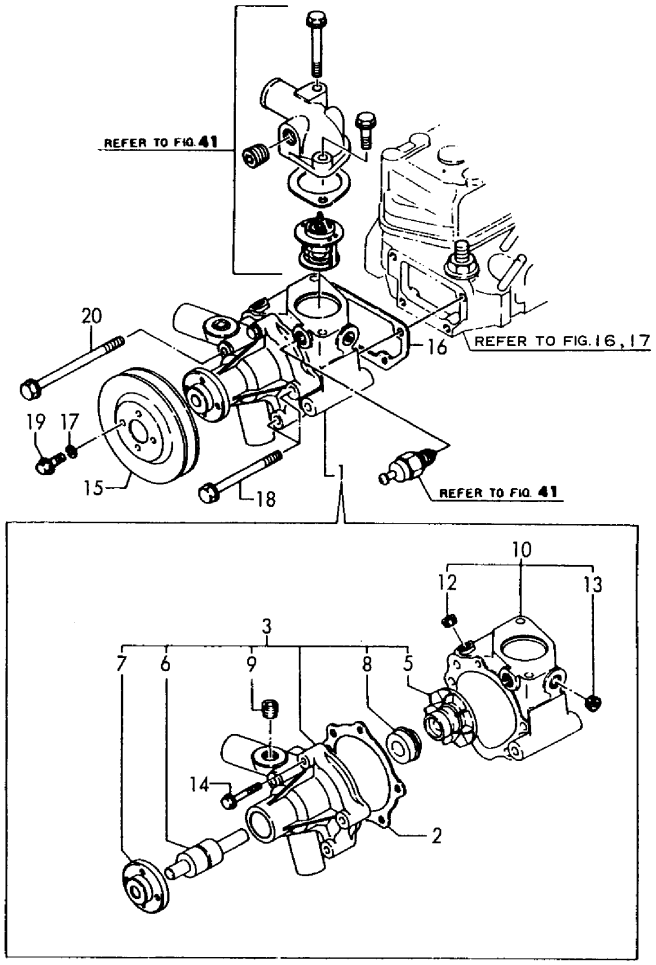

(A)=3GM30
(B)=3GM30VE
(C)=3GM30B
(D)=3GM30C
(E)=3GM30F
(F)=3GM30FVE

No.	Lev.	Parts No.	Description	Q'ty (A)	(B)	(C)	(D)	(E)	(F)	I	R
1	1	128695-42010	PUMP ASSY, WATER					1	1		
2	2	121000-42051	GASKET, WATER PUMP					1	1		
3	2	121000-42100	PUMP ASSY, WATER					1	1		
5	3	129350-42200	IMPELLER					1	1		
6	3	121450-42240	BEARING, SHAFT					1	1		
7	3	121450-42260	FLANGE, V-PULLEY					1	1		
8	3	121450-42310	SEAL, MECHANICAL					1	1		
9	3	23871-030000	PLUG, R03					1	1		
10	2	728695-43500	BRACKET ASSY					1	1		
12	3	23871-020000	PLUG, R02					1	1		
13	3	23871-030000	PLUG, R03					1	1		
14	2	26106-060322	BOLT, M6X 32 PLATED					1	1		
15	1	128695-42350	V-PULLEY					1	1		
16	1	121450-44410	GASKET					1	1		
17	1	22217-060000	WASHER, SPRING 6					4	4		
18	1	26106-080902	BOLT, M8X 90 PLATED					3	3		
19	1	26106-060102	BOLT, M6X 10 PLATED					4	4		
20	1	26106-081102	BOLT, M8X110 PLATED					1	1		

N:Old ◄Yes/No► New, Q:Old ◄No/Yes► New, R:Old ◄Yes/Yes► New, S:Old ◄No/No► New, W:Add, Z:Discontinued, F:Interchangeable by set, K:Q'ty Change

Copyright (C) YANMAR CO., LTD. All RightsReserved.

Fig.35. COOLING FRESH WATER COOLER

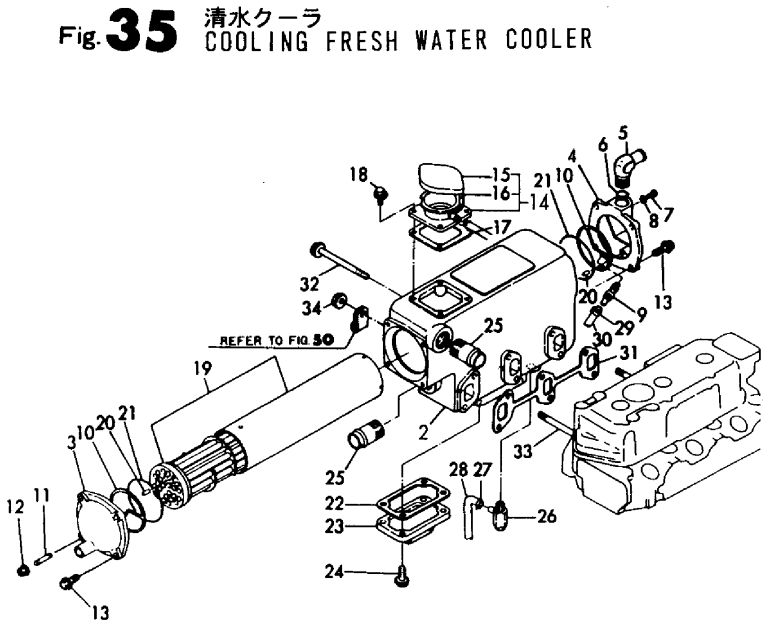

(A)=3GM30 (B)=3GM30VE (C)=3GM30B (D)=3GM30C (E)=3GM30F (F)=3GM30FVE

No.	Lev.	Parts No.	Description	Q'ty (A)	(B)	(C)	(D)	(E)	(F)	I	R
1	1	728390-44500	COOLER ASSY, WATER					1			
1-1	1	128390-44900	COOLER ASSY, WATER					1	1	N	
				(E=E11046)							
2	2	128390-44010	BODY, TANK					1	1		
3	2	128695-44050	COVER, COOLER					1	1		
4	2	128690-44060	COVER, COOLER					1	1		
5	2	128690-49310	ELBOW					1	1		
6	2	24311-000160	O-RING, 1AP16.0					1	1		
7	2	26554-050102	SCREW, M5X10					1	1		
8	2	23414-050000	GASKET, 5X1.0					1	1		
9	2	128695-44090	COCK					1	1		
10	2	128695-44070	GASKET					2	2		
11	2	26216-060182	STUD, M6X 18					1	1		
12	2	26366-060002	NUT, M6					1	1		
13	2	26106-060182	BOLT, M6X 18 PLATED					7	7		
14	2	123682-44190	FILLER ASSY					1	1		
15	3	123682-44210	CAP, RADIATOR					1	1		
16	3	123682-44220	CHAIN					1	1		
17	2	123682-44200	GASKET					1			
17-1	2	123682-44201	GASKET					1	1	N	
				(E=E11515)							
18	2	26106-060142	BOLT, M6X 14 PLATED					4	4		
19	2	128390-44401	PIPE ASSY, COOLING					1	1		
20	2	124790-44470	PIN					2	2		
21	2	24311-000700	O-RING, 1AP70.0					2	2		
22	2	128390-44490	GASKET					1			
22-1	2	128390-44491	GASKET					1	1	N	
				(E=E11515)							
23	2	128390-44480	COVER, TANK					1	1		
24	2	26106-080202	BOLT, M8X 20 PLATED					4	4		
25	2	124160-49480	JOINT, PIPE					2	2		
26	2	120130-49350	COCK, 1/4					1	1		
27	1	124460-77680	RETAINER					1	1		
28	1	23061-070300	PIPE, 7X 300					1	1		
29	1	124722-59050	CLAMP, HOSE 9					1			
29-1	1	124460-77680	RETAINER					1	1	N	
				(E=E13317)							
30	1	23061-070300	PIPE, 7X 300					1	1		
31	1	121450-13250	GASKET					1			
31-1	1	121450-13251	GASKET, MANIFOLD					1	1	N	
				(E=E11515)							
32	1	26106-080902	BOLT, M8X 90 PLATED					4	4		
33	1	26216-080902	STUD, M8X 90					2	2		
34	1	26366-080002	NUT, M8					2	2		

N:Old $\overset{\text{Yes}}{\underset{\text{No}}{\leftrightarrows}}$ New, Q:Old $\overset{\text{No}}{\underset{\text{Yes}}{\leftrightarrows}}$ New, R:Old $\overset{\text{Yes}}{\underset{\text{Yes}}{\leftrightarrows}}$ New, S:Old $\overset{\text{No}}{\underset{\text{No}}{\leftrightarrows}}$ New, W:Add, Z:Discontinued, F:Interchangeable by set, K:Q'ty Change

Copyright (C) YANMAR CO., LTD. All RightsReserved.

Fig.36. SUBTANK

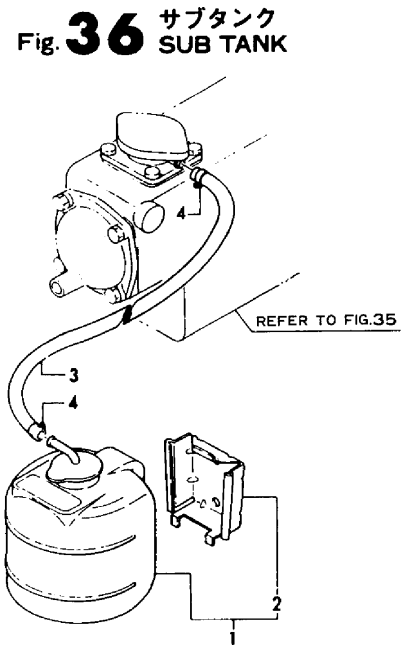

(A)=3GM30
(B)=3GM30VE
(C)=3GM30B
(D)=3GM30C
(E)=3GM30F
(F)=3GM30FVE

No.	Lev.	Parts No.	Description	Q'ty (A)	(B)	(C)	(D)	(E)	(F)	I	R
1	1	120445-44530	TANK, SUB					1	1		
2	2	120445-44540	SUPPORT					1	1		
3	1	124790-44560	PIPE, WATER L=1000					1	1		
4	1	23010-013000	CLAMP 13					2	2		

N:Old $\overset{\text{Yes}}{\underset{\text{No}}{\rightleftarrows}}$ New, Q:Old $\overset{\text{No}}{\underset{\text{Yes}}{\rightleftarrows}}$ New, R:Old $\overset{\text{Yes}}{\underset{\text{Yes}}{\rightleftarrows}}$ New, S:Old $\overset{\text{No}}{\underset{\text{No}}{\rightleftarrows}}$ New, W:Add, Z:Discontinued, F:Interchangeable by set, K:Q'ty Change

Copyright (C) YANMAR CO., LTD. All RightsReserved.

Fig.37. KINGSTON COCK

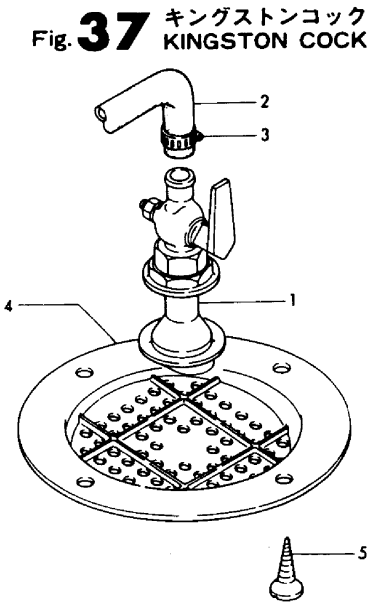

(A)=3GM30 (B)=3GM30VE (C)=3GM30B (D)=3GM30C (E)=3GM30F (F)=3GM30FVE

No.	Lev.	Parts No.	Description	Q'ty (A)	(B)	(C)	(D)	(E)	(F)	I	R
1	1	43662-010030	COCK ASSY, SEA WATER	1	1	1					1
2	1	104211-49080	PIPE, 13/20X2M	1	1	1					1
3	1	23000-022000	CLAMP, 22	3	3	3					1
4	1	43666-020951	COVER, STRAINER	1	1	1					1
5	1	22724-800380	SCREW, 8.0X38	4	4	4					1

Remarks
1)OPTIONAL FOR 3GM30 & 3GM30VE

N:Old $\xleftarrow[\text{No}]{\text{Yes}}$ New, Q:Old $\xleftarrow[\text{Yes}]{\text{No}}$ New, R:Old $\xleftarrow[\text{Yes}]{\text{Yes}}$ New, S:Old $\xleftarrow[\text{No}]{\text{No}}$ New, W:Add, Z:Discontinued, F:Interchangeable by set, K:Q'ty Change

Copyright (C) YANMAR CO., LTD. All RightsReserved.

Fig.38. COOLING WATER LINE

Fig. 38 冷却水パイプ(海水)
COOLING SEA WATER PIPE

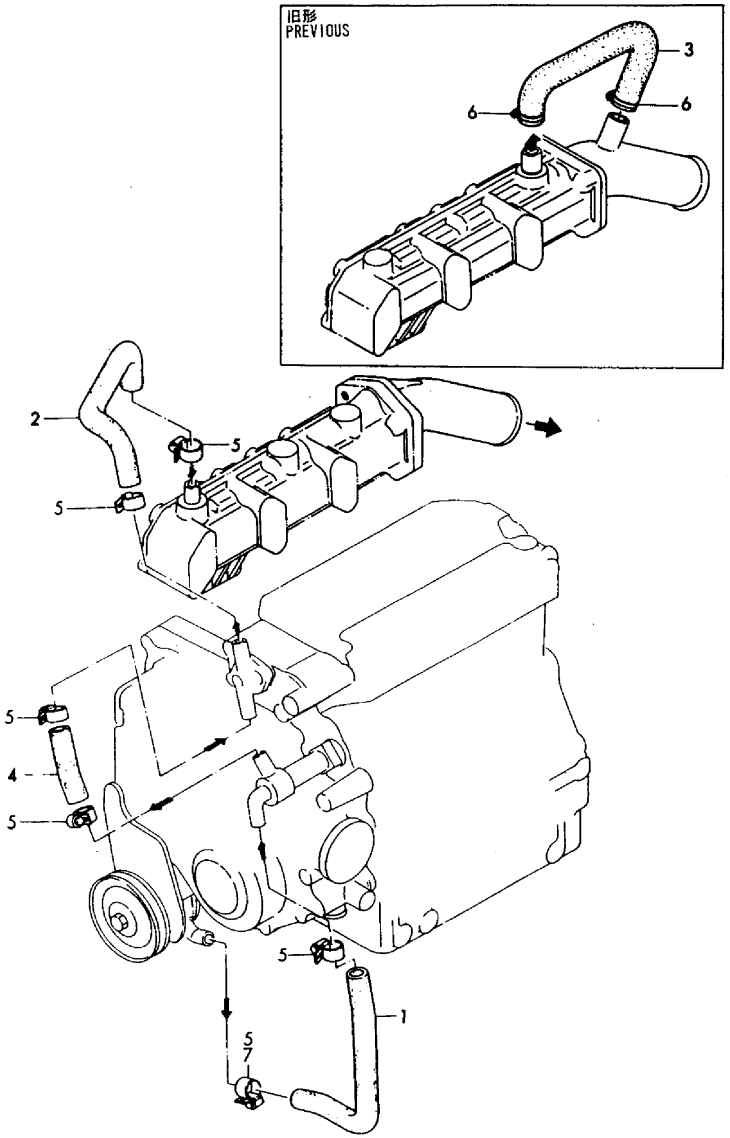

(A)=3GM30 (B)=3GM30VE (C)=3GM30B (D)=3GM30C (E)=3GM30F (F)=3GM30FVE

No.	Lev.	Parts No.	Description	Q'ty (A)	(B)	(C)	(D)	(E)	(F)	I	R
1	1	128270-49010	PIPE, WATER	1		1	1				
1A	1	121370-49040	PIPE, WATER		1						
2	1	128370-49020	PIPE, WATER	1	1	1	1				
3	1	121370-49040	PIPE, WATER	1		1	1			Z	
	(A=E01538)		(C=E00133) (D=E00212)								
4	1	128270-49050	PIPE, WATER	1	1	1	1				
5	1	23000-022000	CLAMP, 22	6	4	6	6				
6	1	23000-025000	CLAMP, 25	2		2	2			Z	
	(A=E01538)		(C=E00133) (D=E00212)								
7	1	23000-025000	CLAMP, 25		2						

N:Old $\overset{\text{Yes}}{\underset{\text{No}}{\leftrightarrow}}$ New, Q:Old $\overset{\text{No}}{\underset{\text{Yes}}{\leftrightarrow}}$ New, R:Old $\overset{\text{Yes}}{\underset{\text{Yes}}{\leftrightarrow}}$ New, S:Old $\overset{\text{No}}{\underset{\text{No}}{\leftrightarrow}}$ New, W:Add, Z:Discontinued, F:Interchangeable by set, K:Q'ty Change

Copyright (C) YANMAR CO., LTD. All RightsReserved.

Fig.39. COOLING WATER LINE

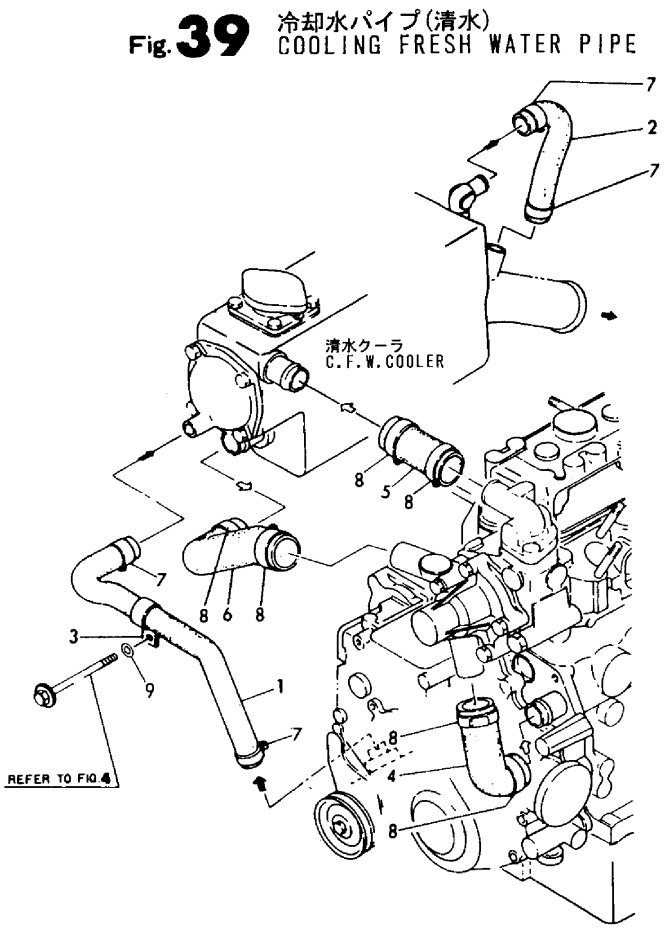

(A)=3GM30
(B)=3GM30VE
(C)=3GM30B
(D)=3GM30C
(E)=3GM30F
(F)=3GM30FVE

No.	Lev.	Parts No.	Description	Q'ty (A)	(B)	(C)	(D)	(E)	(F)	I	R
1	1	128690-49010	PIPE, WATER					1			
1A	1	128291-49020	PIPE, WATER						1		
2	1	124770-49040	PIPE, WATER					1	1		
3	1	121575-49310	RETAINER, PIPE					1	1		
4	1	128290-49510	PIPE, WATER					1	1		
5	1	128695-49520	PIPE, WATER					1	1		
6	1	128695-49530	PIPE, WATER					1	1		
7	1	23000-025000	CLAMP, 25					4	4		
8	1	23000-041000	CLAMP, 41					6	6		
9	1	22137-060000	WASHER, 6					1	1	W	

(E=EXXX)

N:Old ◄Yes/No► New, Q:Old ◄No/Yes► New, R:Old ◄Yes/Yes► New, S:Old ◄No/No► New, W:Add, Z:Discontinued, F:Interchangeable by set, K:Q'ty Change

Copyright (C) YANMAR CO., LTD. All RightsReserved.

Fig.40. THERMOSTAT

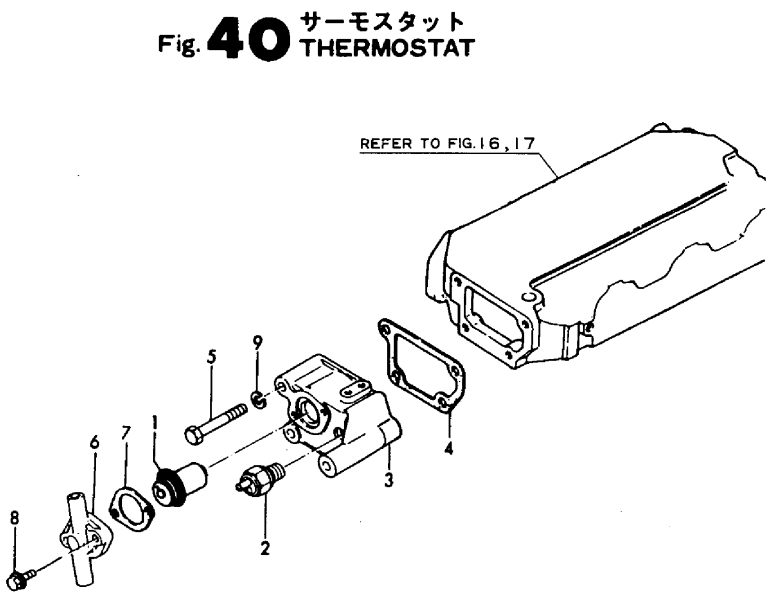

(A)=3GM30 (D)=3GM30C
(B)=3GM30VE (E)=3GM30F
(C)=3GM30B (F)=3GM30FVE

No.	Lev.	Parts No.	Description	Q'ty (A)	(B)	(C)	(D)	(E)	(F)	I	R
1	1	105582-49200	THERMOSTAT	1	1	1	1				
2	1	128275-91340	SWITCH, 65	1	1	1	1				
3	1	128270-49100	BRACKET	1	1	1	1				
4	1	121450-44410	GASKET	1	1	1	1				
5	1	26116-080602	BOLT, M8X 60 PLATED	4	4	4	4				
6	1	128170-49150	COVER, THERMOSTAT	1	1	1	1				
7	1	104211-49160	GASKET	1	1	1	1				
8	1	26106-060182	BOLT, M6X 18 PLATED	2	2	2	2				
9	1	22217-080000	WASHER, SPRING 8	4	4	4	4				

N:Old $\frac{\text{Yes}}{\text{No}}$ New, Q:Old $\frac{\text{No}}{\text{Yes}}$ New, R:Old $\frac{\text{Yes}}{\text{Yes}}$ New, S:Old $\frac{\text{No}}{\text{No}}$ New, W:Add, Z:Discontinued, F:Interchangeable by set, K:Q'ty Change

Copyright (C) YANMAR CO., LTD. All RightsReserved.

Fig.41. THERMOSTAT

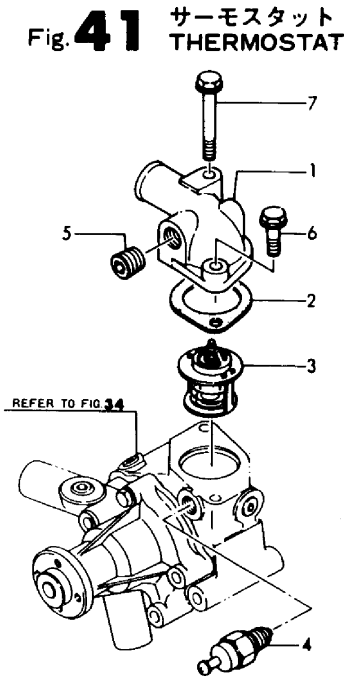

(A)=3GM30 (D)=3GM30C
(B)=3GM30VE (E)=3GM30F
(C)=3GM30B (F)=3GM30FVE

No.	Lev.	Parts No.	Description	Q'ty (A)	(B)	(C)	(D)	(E)	(F)	I	R
1	1	128690-49530	COVER, THERMOSTAT					1			
1-1	1	124101-49530	COVER, THERMOSTAT					1	1	S	
				(E=E04946)							
2	1	129350-49540	GASKET					1			
2-1	1	124736-49540	GASKET					1	1	S	
				(E=EXXX)							
3	1	121750-49800	THERMOSTAT					1	1		
4	1	127610-91350	SWITCH, 95					1	1		
5	1	23873-030000	PLUG, R03					1		Z	
				(E=EXXX)							
6	1	26106-080302	BOLT, M8X 30 PLATED					1	1		
7	1	26106-080652	BOLT, M8X 65 PLATED					1	1		

N:Old $\xleftrightarrow[\text{No}]{\text{Yes}}$ New, Q:Old $\xleftrightarrow[\text{Yes}]{\text{No}}$ New, R:Old $\xleftrightarrow[\text{Yes}]{\text{Yes}}$ New, S:Old $\xleftrightarrow[\text{No}]{\text{No}}$ New, W:Add, Z:Discontinued, F:Interchangeable by set, K:Q'ty Change

Copyright (C) YANMAR CO., LTD. All RightsReserved.

Fig.42. COOLING WATER LINE(OPTIONAL)

Fig. **42** 冷却水パイプ(海水)(オプション)
COOLING SEA WATER PIPE(OPTIONAL)

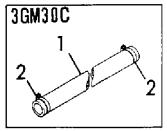

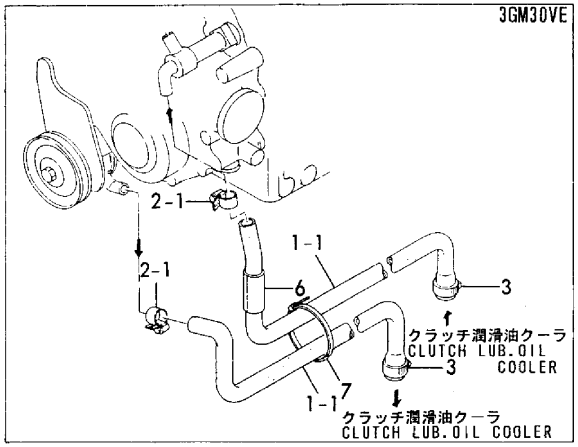

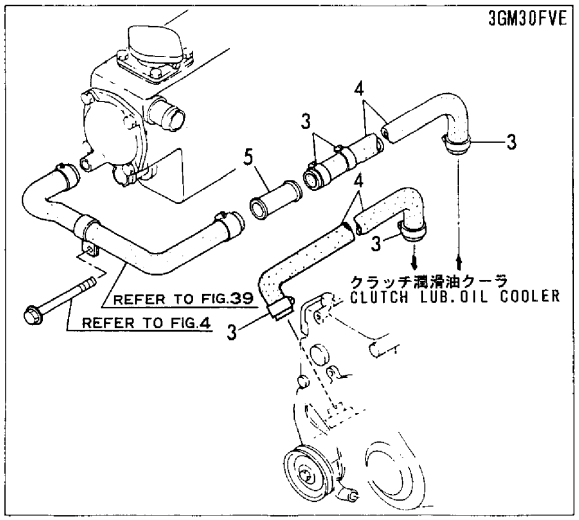

(A)=3GM30 (B)=3GM30VE (C)=3GM30B (D)=3GM30C (E)=3GM30F (F)=3GM30FVE

No.	Lev.	Parts No.	Description	Q'ty (A)	(B)	(C)	(D)	(E)	(F)	I	R
1	1	128170-49080	PIPE, WATER				1				
1-1	1	128170-49081	PIPE, WATER (D=E00212)		2		1			N	
2	1	23000-022000	CLAMP, 22				2				
2-1	1	23000-022000	CLAMP, 22 (D=E00212)		2		1			K	
3	1	23000-025000	CLAMP, 25		2		1		5		
4	1	124223-49050	PIPE, WATER						2		
5	1	128291-49250	JOINT						1		
6	1	128271-49450	TUBE, PROTECT		1						
7	1	121750-59890	BAND, NYLON		1						

N:Old $\xleftarrow[\text{No}]{\text{Yes}}$ New, Q:Old $\xleftarrow[\text{Yes}]{\text{No}}$ New, R:Old $\xleftarrow[\text{Yes}]{\text{Yes}}$ New, S:Old $\xleftarrow[\text{No}]{\text{No}}$ New, W:Add, Z:Discontinued, F:Interchangeable by set, K:Q'ty Change

Copyright (C) YANMAR CO., LTD. All RightsReserved.

Fig.43. FUEL INJECTION PUMP

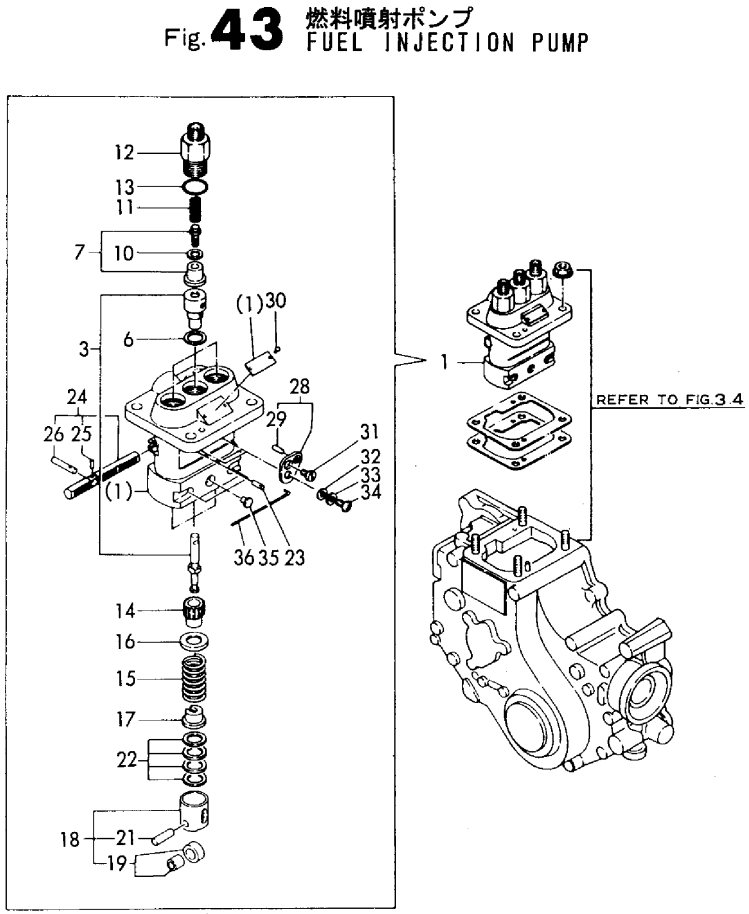

(A)=3GM30 (B)=3GM30VE (C)=3GM30B (D)=3GM30C (E)=3GM30F (F)=3GM30FVE

No.	Lev.	Parts No.	Description	Q'ty (A)	(B)	(C)	(D)	(E)	(F)	I	R
1	1	728374-51100	PUMP ASSY, INJECTION	1		1	1	1			
1-1	1	728374-51101	PUMP ASSY, INJECTION	1	1	1	1	1	1	N	
	(A=E13959)		(C=E00394) (D=E01583)	(E=E13924)							
3	2	128170-51101	PLUNGER ASSY	3	3	3	3	3	3		
6	2	124950-51270	GASKET	3	3	3	3	3	3		
7	2	128170-51300	VALVE ASSY, DELIVERY	3		3	3	3			
7-1	2	105500-51300	VALVE ASSY, DELIVERY	3	3	3	3	3	3	N	
	(A=E13959)		(C=E00394) (D=E01583)	(E=E13924)							
10	2	124550-51350	GASKET, DELIVERY	3	3	3	3	3	3		
11	2	124550-51320	SPRING, DELIVERY	3	3	3	3	3	3		
12	2	124550-51341	HOLDER, DELIVERY L43	3	3	3	3	3	3		
13	2	124550-51370	O-RING	3	3	3	3	3	3		
14	2	124950-51510	PINION	3	3	3	3	3	3		
15	2	124950-51190	SPRING, PLUNGER	3	3	3	3	3	3		
16	2	174307-51170	RETAINER, SPRING A	3	3	3	3	3	3		
17	2	174307-51181	RETAINER, SPRING B	3	3	3	3	3	3		
18	2	124550-51200	TAPPET	3	3	3	3	3	3		
19	3	111100-51220	ROLLER, TAPPET	3	3	3	3	3	3		
21	3	174100-54120	PIN, TAPPET ROLLER	3	3	3	3	3	3		
22	2	174307-51700	SHIM SET, PLUNGER	3	3	3	3	3	3		
23	2	103854-51251	PIN, PLUNGER	1	1	1	1	1	1		
24	2	121450-51500	RACK, CONTROL	1	1	1	1	1	1		
25	3	121450-51550	PIN	1	1	1	1	1	1		
26	3	124550-51590	RETAINER	1	1	1	1	1	1		
28	2	124950-51640	PLATE ASSY, ADJUST	2	2	2	2	2	2		
29	3	124950-51670	PIN	2	2	2	2	2	2		
30	2	124220-51890	RIVET	2	2	2	2	2	2		
31	2	103854-51660	SCREW	2	2	2	2	2	2		
32	2	22117-050000	WASHER, 5	2		2	2	2		Z	
	(A=EXXX)		(C=EXXX) (D=EXXX)	(E=EXXX)							
33	2	22217-050000	WASHER, SPRING 5	2		2	2	2		Z	
	(A=EXXX)		(C=EXXX) (D=EXXX)	(E=EXXX)							
34	2	26587-050102	SCREW, M5X10	2		2	2	2			
34-1	2	26033-050102	SCREW, M5X10	2	2	2	2	2	2	N	
	(A=EXXX)		(C=EXXX) (D=EXXX)	(E=EXXX)							
35	2	124950-51450	PIECE, GUIDE	3	3	3	3	3	3		
36	2	121150-51460	PIN, GUIDE	1	1	1	1	1	1		

N:Old $\overset{\text{Yes}}{\underset{\text{No}}{\leftrightarrow}}$ New, Q:Old $\overset{\text{No}}{\underset{\text{Yes}}{\leftrightarrow}}$ New, R:Old $\overset{\text{Yes}}{\underset{\text{Yes}}{\leftrightarrow}}$ New, S:Old $\overset{\text{No}}{\underset{\text{No}}{\leftrightarrow}}$ New, W:Add, Z:Discontinued, F:Interchangeable by set, K:Q'ty Change

Copyright (C) YANMAR CO., LTD. All RightsReserved.

Fig.44. FUEL FEED PUMP

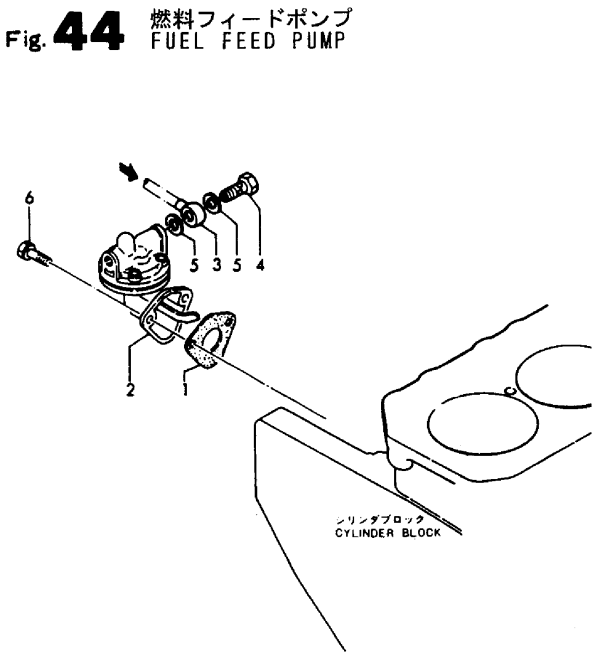

(A)=3GM30 (B)=3GM30VE (C)=3GM30B (D)=3GM30C (E)=3GM30F (F)=3GM30FVE

No.	Lev.	Parts No.	Description	Q'ty (A)	(B)	(C)	(D)	(E)	(F)	I	R
1	1	121520-01850	GASKET	1		1	1	1			
1-1	1	121520-01851	GASKET	1	1	1	1	1	1	N	
	(A=E10103)		(C=E00309) (D=E01060)	(E=E10104)							
2	1	129301-52020	PUMP ASSY, FUEL FEED	1	1	1	1	1	1		
2-1	1	128270-52010	PUMP ASSY, FUEL FEED	1	1			1	1	S	1
	(A=E/#E32488)		(B=E/#E32488)	(E=E/#E32450)				(F=E/#E32450)			
3	1	104264-59030	JOINT, PIPE 8	1	1	1	1	1	1		
4	1	105582-59150	BOLT, PIPE JOINT M8	1	1	1	1	1	1		
5	1	23414-080000	GASKET, 8X1.0	2	2	2	2	2	2		
6	1	26013-060162	BOLT, SPRING M6X 16	2	2	2	2	2	2		

Remarks
(1)Interchangeable by simultaneous replacement with Fig.49 No.24-1(or Fig.50 No.23-1).

N:Old $\frac{\text{Yes}}{\text{No}}$ New, Q:Old $\frac{\text{No}}{\text{Yes}}$ New, R:Old $\frac{\text{Yes}}{\text{Yes}}$ New, S:Old $\frac{\text{No}}{\text{No}}$ New, W:Add, Z:Discontinued, F:Interchangeable by set, K:Q'ty Change

Copyright (C) YANMAR CO., LTD. All RightsReserved.

Fig.45. FUEL INJECTION VALVE

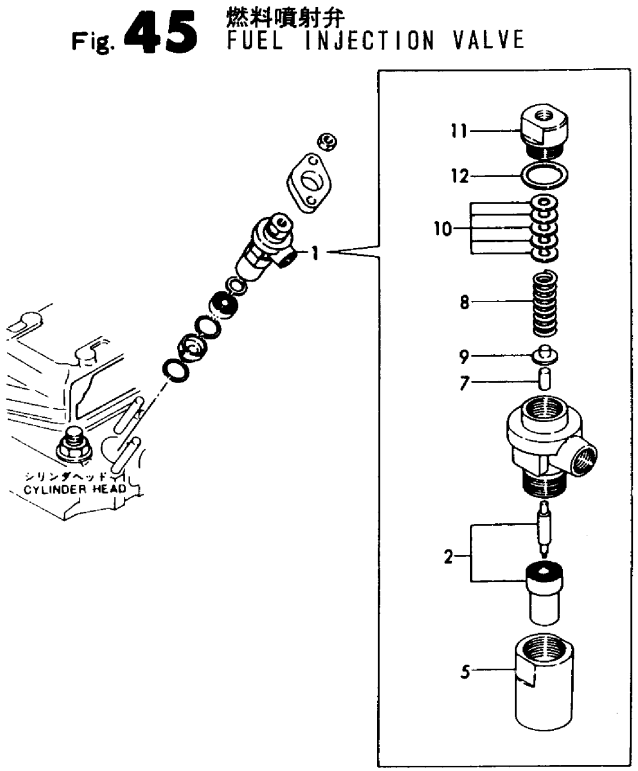

(A)=3GM30
(B)=3GM30VE
(C)=3GM30B
(D)=3GM30C
(E)=3GM30F
(F)=3GM30FVE

No.	Lev.	Parts No.	Description	Q'ty (A)	(B)	(C)	(D)	(E)	(F)	I	R
1	1	728170-53100	FUEL INJECTOR ASSY	3	3	3	3	3	3		
2	2	124770-53000	VALVE ASSY,INJECTION	3	3	3	3	3	3		
5	2	128170-53080	NUT, NOZZLE	3	3	3	3	3	3		
7	2	113200-53110	SPINDLE, INTER	3	3	3	3	3	3		
8	2	104211-53120	SPRING, NOZZLE	3	3	3	3	3	3		
9	2	113200-53120	RETAINER, SPRING	3	3	3	3	3	3		
10	2	110250-53150	PLATE ASSY, ADJUST	3	3	3	3	3	3		
11	2	103854-53180	RETAINER, SPRING	3	3	3	3	3	3		
12	2	172100-53200	GASKET	3	3	3	3	3	3		

N:Old $\xleftrightarrow[\text{No}]{\text{Yes}}$ New, Q:Old $\xleftrightarrow[\text{Yes}]{\text{No}}$ New, R:Old $\xleftrightarrow[\text{Yes}]{\text{Yes}}$ New, S:Old $\xleftrightarrow[\text{No}]{\text{No}}$ New, W:Add, Z:Discontinued, F:Interchangeable by set, K:Q'ty Change

Copyright (C) YANMAR CO., LTD. All RightsReserved.

Fig.46. FUEL STRAINER

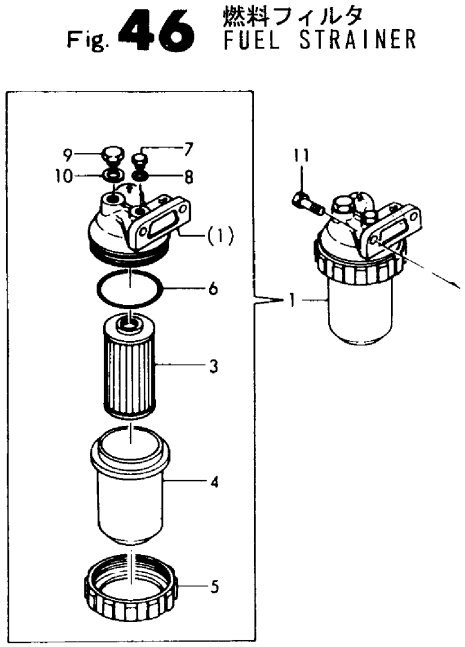

(A)=3GM30
(B)=3GM30VE
(C)=3GM30B
(D)=3GM30C
(E)=3GM30F
(F)=3GM30FVE

No.	Lev.	Parts No.	Description	Q'ty (A)	(B)	(C)	(D)	(E)	(F)	I	R
1	1	124790-55601	STRAINER ASSY, FUEL	1	1	1	1	1	1		
3	2	104500-55710	ELEMENT	1	1	1	1	1	1		
4	2	121370-55730	CUP, STRAINER	1	1	1	1	1	1		
5	2	110250-55610	RING, CUP RETAINING	1	1	1	1	1	1		
6	2	24341-000440	O-RING, 1AS44.0	1	1	1	1	1	1		
7	2	101720-55750	PLUG, HEXAGON M6	1	1	1	1	1	1		
8	2	23418-060000	GASKET, 6X1.0	1	1	1	1	1	1		
9	2	135210-51900	PLUG	1	1	1	1	1	1		
10	2	23414-080012	GASKET, 8X1.0	1	1	1	1	1	1		
11	1	26013-060162	BOLT, SPRING M6X 16	2	2	2	2	2	2		

N:Old $\overset{\text{Yes}}{\underset{\text{No}}{\leftrightarrows}}$ New, Q:Old $\overset{\text{No}}{\underset{\text{Yes}}{\leftrightarrows}}$ New, R:Old $\overset{\text{Yes}}{\underset{\text{Yes}}{\leftrightarrows}}$ New, S:Old $\overset{\text{No}}{\underset{\text{No}}{\leftrightarrows}}$ New, W:Add, Z:Discontinued, F:Interchangeable by set, K:Q'ty Change

Copyright (C) YANMAR CO., LTD. All RightsReserved.

Fig.47. FUEL INJECTION LINE

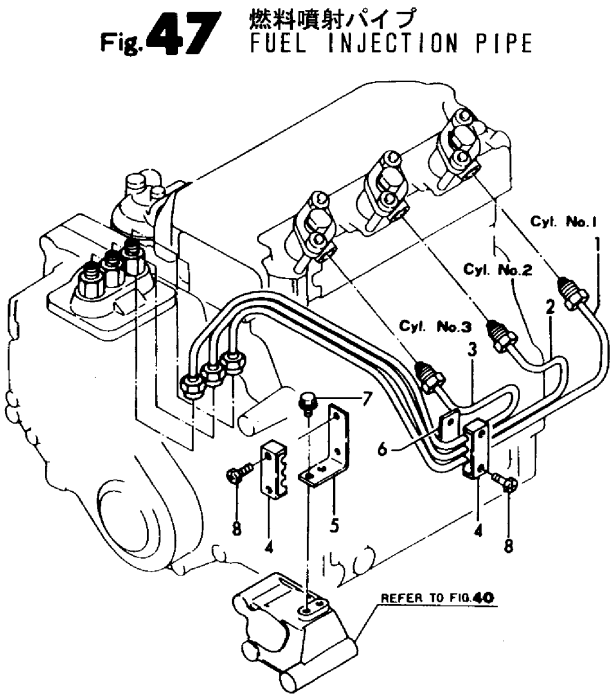

(A)=3GM30
(B)=3GM30VE
(C)=3GM30B
(D)=3GM30C
(E)=3GM30F
(F)=3GM30FVE

No.	Lev.	Parts No.	Description	Q'ty (A)	(B)	(C)	(D)	(E)	(F)	I	R
1	1	128370-59810	PIPE ASSY, INJECTION	1	1	1	1				
2	1	128370-59820	PIPE ASSY, INJECTION	1	1	1	1				
3	1	128370-59830	PIPE ASSY, INJECTION	1	1	1	1				
4	1	123372-59100	RETAINER, PIPE	2	2	2	2				
5	1	121450-59850	BRACKET	1	1	1	1				
6	1	121250-59860	BRACKET	1	1	1	1				
7	1	26106-060122	BOLT, M6X 12 PLATED	2	2	2	2				
8	1	121465-59950	BOLT, M6X16	4	4	4	4				

N:Old $\xleftrightarrow[\text{No}]{\text{Yes}}$ New, Q:Old $\xleftrightarrow[\text{Yes}]{\text{No}}$ New, R:Old $\xleftrightarrow[\text{Yes}]{\text{Yes}}$ New, S:Old $\xleftrightarrow[\text{No}]{\text{No}}$ New, W:Add, Z:Discontinued, F:Interchangeable by set, K:Q'ty Change

Copyright (C) YANMAR CO., LTD. All RightsReserved.

Fig.48. FUEL INJECTION LINE

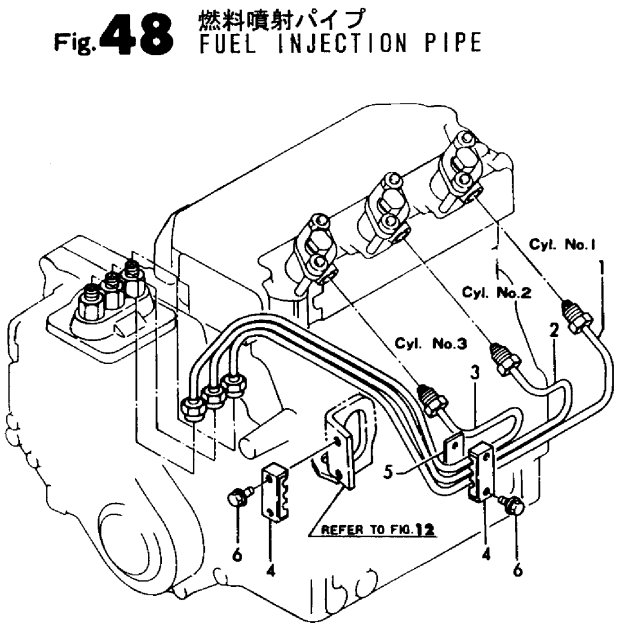

(A)=3GM30 (B)=3GM30VE (C)=3GM30B (D)=3GM30C (E)=3GM30F (F)=3GM30FVE

No.	Lev.	Parts No.	Description	Q'ty (A)	(B)	(C)	(D)	(E)	(F)	I	R
1	1	128390-59810	PIPE ASSY, INJECTION					1	1		
2	1	128390-59820	PIPE ASSY, INJECTION					1	1		
3	1	128390-59830	PIPE ASSY, INJECTION					1	1		
4	1	123372-59100	RETAINER, PIPE					2	2		
5	1	121250-59860	BRACKET					1	1		
6	1	26106-060162	BOLT, M6X 16 PLATED					4	4		

N:Old ◄Yes/No► New, Q:Old ◄No/Yes► New, R:Old ◄Yes/Yes► New, S:Old ◄No/No► New, W:Add, Z:Discontinued, F:Interchangeable by set, K:Q'ty Change

Copyright (C) YANMAR CO., LTD. All RightsReserved.

Fig.49. FUEL PIPE

P/C NEWS No:Y00F5062-2
PUBLISHED:2000/11

Fig.49 燃料パイプ FUEL PIPE

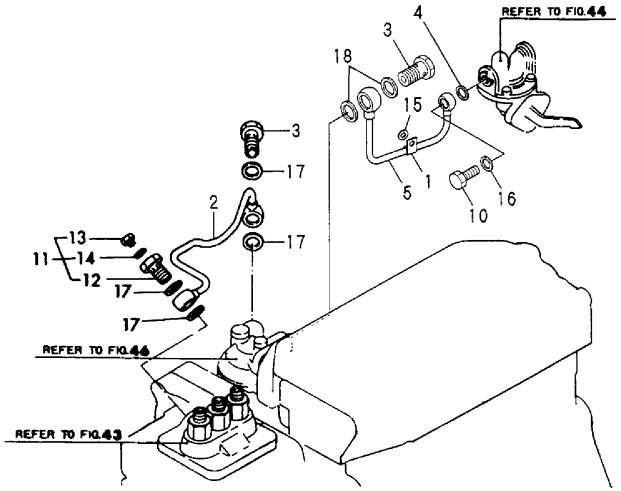

3GM30
3GM30VE

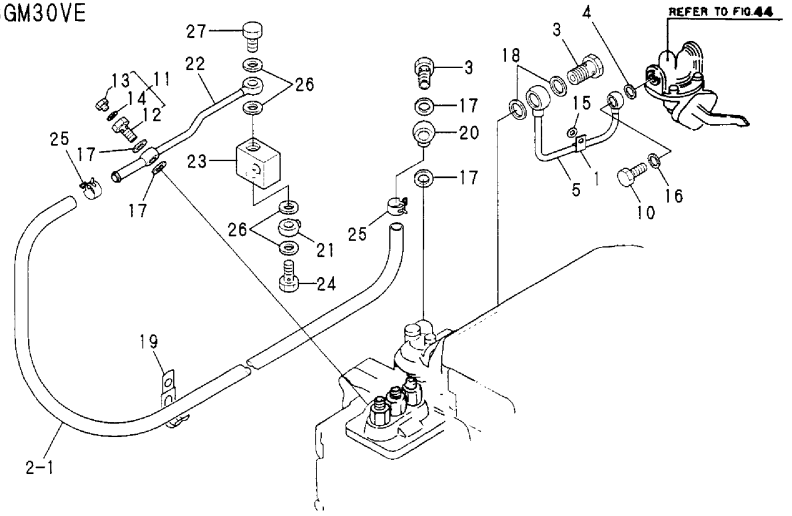

(A)=3GM30 (B)=3GM30VE (C)=3GM30B (D)=3GM30C (E)=3GM30F (F)=3GM30FVE

No.	Lev.	Parts No.	Description	Q'ty (A)	(B)	(C)	(D)	(E)	(F)	I	R
1	1	124450-39240	RETAINER, PIPE	1	1	1	1				
2	1	128370-59010	PIPE ASSY, FUEL	1	1	1	1				
2-1	1	119173-59120	PIPE, FUEL	1	1					S	
	(A=*1997.01.)	(B=*1997.01.)									
3	1	23857-060000	BOLT, JOINT 6	2	2	2	2				
4	1	104884-59170	GASKET	1	1	1	1				
5	1	128370-59081	PIPE ASSY, FUEL	1	1	1	1				
10	1	105582-59150	BOLT, PIPE JOINT M8	1	1	1	1				
11	1	103854-59191	BOLT ASSY, JOINT M12	1	1	1	1				
12	2	103854-59201	BOLT, PIPE JOINT M12	1	1	1	1				
13	2	124060-59380	PLUG, HEXAGON M6	1	1	1	1				
14	2	22190-060002	WASHER, SEAL 6	1	1	1	1				
15	1	22117-080000	WASHER, 8	1	1	1	1			Z	
	(A=*1997.01.)	(B=*1997.01.)	(C=*1997.01.) (D=*1997.01.)								
16	1	23414-080000	GASKET, 8X1.0	1	1	1	1				
16-1	1	22190-080002	WASHER, SEAL 6	1	1	1	1			N	
	(A=*2000.03.)	(B=*2000.03.)	(C=*2000.03.) (D=*2000.03.)								
17	1	23414-120000	GASKET, 12X1.0	4	4	4	4				
17-1	1	22190-120002	WASHER, SEAL 12	4	4	4	4			N	
	(A=*2000.03.)	(B=*2000.03.)	(C=*2000.03.) (D=*2000.03.)								
18	1	23414-120000	GASKET, 12X1.0	2	2	2	2				
18-1	1	22190-120002	WASHER, SEAL 12	2	2	2	2			N	
	(A=*2000.03.)	(B=*2000.03.)	(C=*2000.03.) (D=*2000.03.)								
19	1	194440-51620	CLAMP, B	1	1					W	
	(A=*1997.01.)	(B=*1997.01.)									
20	1	104264-59020	JOINT	1	1					W	
	(A=*1997.01.)	(B=*1997.01.)									
21	1	104264-59020	JOINT	1	1					W	
	(A=*1997.01.)	(B=*1997.01.)									
22	1	128377-59550	PIPE ASSY, FUEL	1	1					W	
	(A=*1997.01.)	(B=*1997.01.)									
23	1	128296-59900	JOINT	1	1						
24	1	128296-59940	VALVE ASSY, CHECK	1	1					W	
	(A=*1997.01.)	(B=*1997.01.)									
24-1	1	128370-59950	VALVE ASSY, CHECK	1	1					S	1
	(A=E/#E32488)	(B=E/#E32488)									
25	1	23000-016000	CLAMP, 16	2	2					W	
	(A=*1997.01.)	(B=*1997.01.)									
26	1	22190-120002	WASHER, SEAL 12	4	4					W	
	(A=*1997.01.)	(B=*1997.01.)									
27	1	23857-060000	BOLT, JOINT 6	1	1					W	
	(A=*1997.01.)	(B=*1997.01.)									

Remarks
(1)Fig.44 No.2-1 interchangeable by set.

N:Old $\xleftarrow[\text{No}]{\text{Yes}}$ New, Q:Old $\xleftarrow[\text{Yes}]{\text{No}}$ New, R:Old $\xleftarrow[\text{Yes}]{\text{Yes}}$ New, S:Old $\xleftarrow[\text{No}]{\text{No}}$ New, W:Add, Z:Discontinued, F:Interchangeable by set, K:Q'ty Change

Copyright (C) YANMAR CO., LTD. All RightsReserved.

Fig.50. FUEL PIPE

P/C NEWS No:Y00F5062-2
PUBLISHED:2000/11

Fig.50 燃料パイプ(3GM30F/FVE) FUEL PIPE(3GM30F/FVE)

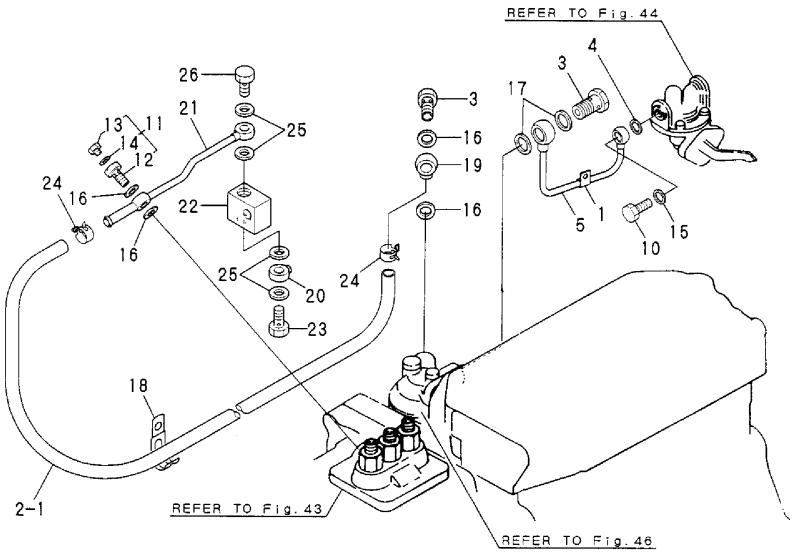

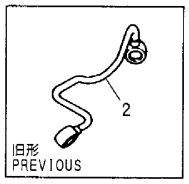

(A)=3GM30 (B)=3GM30VE (C)=3GM30B (D)=3GM30C (E)=3GM30F (F)=3GM30FVE

No.	Lev.	Parts No.	Description	Q'ty (A)	(B)	(C)	(D)	(E)	(F)	I	R
1	1	124450-39240	RETAINER, PIPE					1	1		
2	1	128390-59010	PIPE ASSY, FUEL					1	1		
2-1	1	119173-59120	PIPE, FUEL					1	1	S	
				(E=*1997.01.)				(F=*1997.01.)			
3	1	23857-060000	BOLT, JOINT 6					2	2		
4	1	104884-59170	GASKET					1	1		
5	1	128370-59081	PIPE ASSY, FUEL					1	1		
10	1	105582-59150	BOLT, PIPE JOINT M8					1	1		
11	1	103854-59191	BOLT ASSY, JOINT M12					1	1		
12	2	103854-59201	BOLT, PIPE JOINT M12					1	1		
13	2	124060-59380	PLUG, HEXAGON M6					1	1		
14	2	22190-060002	WASHER, SEAL 6					1	1		
15	1	23414-080000	GASKET, 8X1.0					1	1		
15-1	1	22190-080002	WASHER, SEAL 6					1	1	N	
				(E=*2000.03.)				(F=*2000.03.)			
16	1	23414-120000	GASKET, 12X1.0					4	4		
16-1	1	22190-120002	WASHER, SEAL 12					4	4	N	
				(E=*2000.03.)				(F=*2000.03.)			
17	1	23414-120000	GASKET, 12X1.0					2	2		
17-1	1	22190-120002	WASHER, SEAL 12					2	2	N	
				(E=*2000.03.)				(F=*2000.03.)			
18	1	194440-51620	CLAMP, B					1	1	W	
				(E=*1997.01.)				(F=*1997.01.)			
19	1	104264-59020	JOINT					1	1	W	
				(E=*1997.01.)				(F=*1997.01.)			
20	1	104264-59020	JOINT					1	1	W	
				(E=*1997.01.)				(F=*1997.01.)			
21	1	128377-59550	PIPE ASSY, FUEL					1	1	W	
				(E=*1997.01.)				(F=*1997.01.)			
22	1	128296-59900	JOINT					1	1	W	
				(E=*1997.01.)				(F=*1997.01.)			
23	1	128296-59940	VALVE ASSY, CHECK					1	1	W	
				(E=*1997.01.)				(F=*1997.01.)			
23-1	1	128370-59950	VALVE ASSY, CHECK					1	1	S	1
				(E=E/#32450)				(F=E/#E32450)			
24	1	23000-016000	CLAMP, 16					2	2	W	
				(E=*1997.01.)				(F=*1997.01.)			
25	1	22190-120002	WASHER, SEAL 12					4	4	W	
				(E=*1997.01.)				(F=*1997.01.)			
26	1	23857-060000	BOLT, JOINT 6					1	1	W	
				(E=*1997.01.)				(F=*1997.01.)			

Remarks
(1)Fig.44 No.2-1 interchangeable by set.

N:Old ←Yes/No→ New, Q:Old ←No/Yes→ New, R:Old ←Yes/Yes→ New, S:Old ←No/No→ New, W:Add, Z:Discontinued, F:Interchangeable by set, K:Q'ty Change

Copyright (C) YANMAR CO., LTD. All RightsReserved.

Fig.51. FUEL RETURN LINE

(A)=3GM30
(B)=3GM30VE
(C)=3GM30B
(D)=3GM30C
(E)=3GM30F
(F)=3GM30FVE

Fig. 51 燃料戻しパイプ
FUEL RETURN PIPE

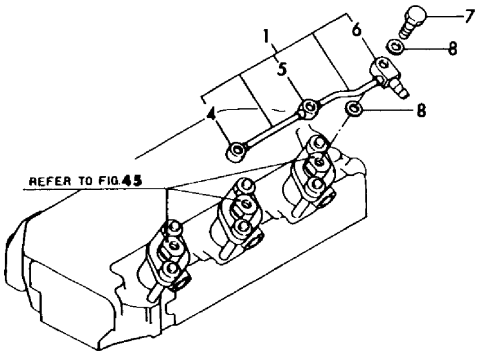

No.	Lev.	Parts No.	Description	Q'ty (A)	(B)	(C)	(D)	(E)	(F)	I	R
1	1	128370-59500	PIPE ASSY, RETURN	1	1	1	1	1	1		
4	2	103288-39170	JOINT, PIPE	1	1	1	1	1	1		
5	2	124450-39180	JOINT, PIPE	1	1	1	1	1	1		
6	2	124790-59530	JOINT	1	1	1	1	1	1		
7	1	101147-59810	BOLT, PIPE JOINT M8	3	3	3	3	3	3		
8	1	23414-080000	GASKET, 8X1.0	6	6	6	6	6	6		

N:Old $\overset{\text{Yes}}{\underset{\text{No}}{\leftrightarrows}}$ New, Q:Old $\overset{\text{No}}{\underset{\text{Yes}}{\leftrightarrows}}$ New, R:Old $\overset{\text{Yes}}{\underset{\text{Yes}}{\leftrightarrows}}$ New, S:Old $\overset{\text{No}}{\underset{\text{No}}{\leftrightarrows}}$ New, W:Add, Z:Discontinued, F:Interchangeable by set, K:Q'ty Change

Copyright (C) YANMAR CO., LTD. All RightsReserved.

Fig.52. GOVERNOR DRIVING

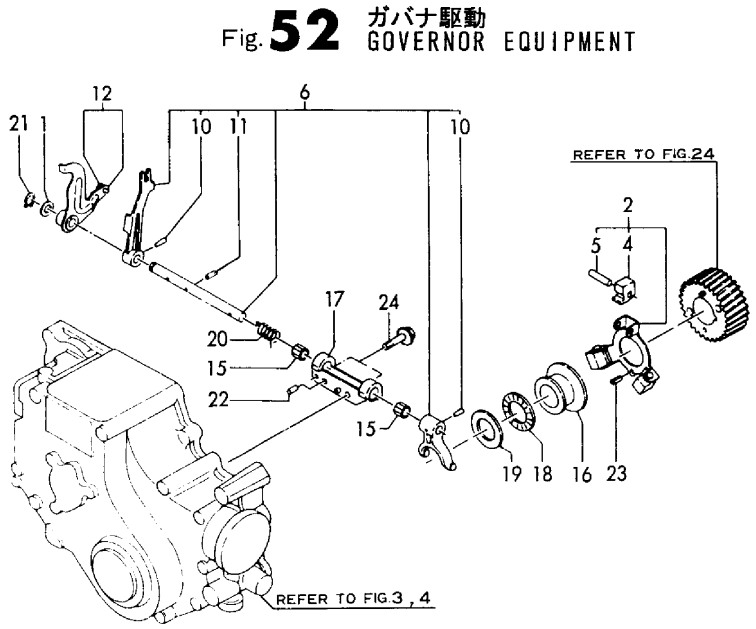

(A)=3GM30 (B)=3GM30VE (C)=3GM30B (D)=3GM30C (E)=3GM30F (F)=3GM30FVE

No.	Lev.	Parts No.	Description	Q'ty (A)	(B)	(C)	(D)	(E)	(F)	I	R
1	1	104211-42130	PIECE, DISTANCE	1	1	1	1	1	1		
2	1	171016-61100	WEIGHT, GOVERNOR	1		1	1	1			
2-1	1	771016-61620	WEIGHT ASSY,GOVERNOR	1	1	1	1	1	1	N	
	(A=*1982.07)		(C=*1982.07) (D=*1982.07)	(E=*1982.07)							
4	2	104200-61200	WEIGHT, GOVERNOR	3	3	3	3	3	3		
5	2	121575-61220	PIN, GOVERNOR WEIGHT	3	3	3	3	3	3		
6	1	721500-61560	LEVER ASSY, GOVERNOR	1	1	1	1	1	1		
10	2	22322-030200	PIN, TAPER 3X20	2	2	2	2	2	2		
11	2	22351-030012	PIN, SPRING 3.0X12	1	1	1	1	1	1		
12	1	121575-61160	LEVER ASSY, CONTROL	1		1	1	1			
12-1	1	121575-61161	LEVER ASSY, CONTROL	1	1	1	1	1	1	N	
	(A=E14187)		(C=E00396) (D=E01638)	(E=E14136)							
15	1	122410-61650	BEARING, FJ-1010W	2	2	2	2	2	2		
16	1	121000-61600	SLEEVE, GOVERNOR	1	1	1	1	1	1		
17	1	121575-61620	SUPPORT	1	1	1	1	1	1		
18	1	121575-61710	BEARING, FNTA-2542	1	1	1	1	1	1		
19	1	121575-61720	COLLAR	1	1	1	1	1	1		
20	1	121575-66310	SPRING, STARTING	1	1	1	1	1	1		
21	1	22242-000100	RING, 10	1	1	1	1	1	1		
22	1	22312-040080	PIN, PARALLEL M4X 8	2	2	2	2	2	2		
23	1	22351-040008	PIN, SPRING 4.0X 8	2	2	2	2	2	2		
24	1	26106-060282	BOLT, M6X 28 PLATED	2	2	2	2	2	2		

N:Old $\frac{\text{Yes}}{\text{No}}$ New, Q:Old $\frac{\text{No}}{\text{Yes}}$ New, R:Old $\frac{\text{Yes}}{\text{Yes}}$ New, S:Old $\frac{\text{No}}{\text{No}}$ New, W:Add, Z:Discontinued, F:Interchangeable by set, K:Q'ty Change

Copyright (C) YANMAR CO., LTD. All RightsReserved.

Fig.53. CONTROL DEVICE

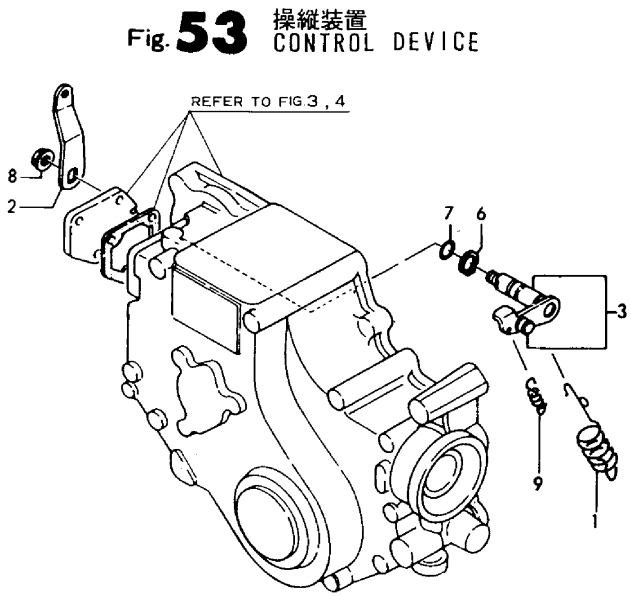

(A)=3GM30 (B)=3GM30VE (C)=3GM30B (D)=3GM30C (E)=3GM30F (F)=3GM30FVE

No.	Lev.	Parts No.	Description	Q'ty (A)	(B)	(C)	(D)	(E)	(F)	I	R
1	1	128270-66010	SPRING, REGULATOR	1	1	1	1	1	1		
2	1	121575-66051	HANDLE, REGULATOR	1	1	1	1	1	1		
3	1	121000-66090	LEVER ASSY,REGULATOR	1	1	1	1	1	1		
6	1	22242-000120	RING, 12	1	1	1	1	1	1		
7	1	24311-000090	O-RING, 1AP9.0	1	1	1	1	1	1		
8	1	26366-080002	NUT, M8	1	1	1	1	1	1		
9	1	121575-66200	SPRING, REGULATOR	1	1	1	1	1	1		

N:Old $\frac{\text{Yes}}{\text{No}}$ New, Q:Old $\frac{\text{No}}{\text{Yes}}$ New, R:Old $\frac{\text{Yes}}{\text{Yes}}$ New, S:Old $\frac{\text{No}}{\text{No}}$ New, W:Add, Z:Discontinued, F:Interchangeable by set, K:Q'ty Change

Copyright (C) YANMAR CO., LTD. All RightsReserved.

Fig.54. IDLE ADJUSTER

Fig. 54 アイドルアジャスタ IDLE ADJUSTER

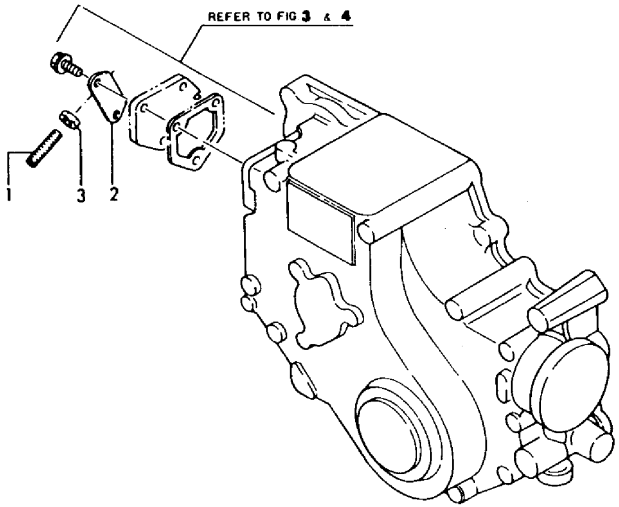

(A)=3GM30
(B)=3GM30VE
(C)=3GM30B
(D)=3GM30C
(E)=3GM30F
(F)=3GM30FVE

No.	Lev.	Parts No.	Description	Q'ty (A)	(B)	(C)	(D)	(E)	(F)	I	R
1	1	121575-66800	SCREW	1	1	1	1	1	1		
2	1	121575-66850	RETAINER	1	1	1	1	1	1		
3	1	26756-060002	NUT, LOCK M6	1	1	1	1	1	1		

N:Old $\xleftarrow[\text{No}]{\text{Yes}}$ New, Q:Old $\xleftarrow[\text{Yes}]{\text{No}}$ New, R:Old $\xleftarrow[\text{Yes}]{\text{Yes}}$ New, S:Old $\xleftarrow[\text{No}]{\text{No}}$ New, W:Add, Z:Discontinued, F:Interchangeable by set, K:Q'ty Change

Copyright (C) YANMAR CO., LTD. All RightsReserved.

Fig.55. FUEL CONTROL DEVICE

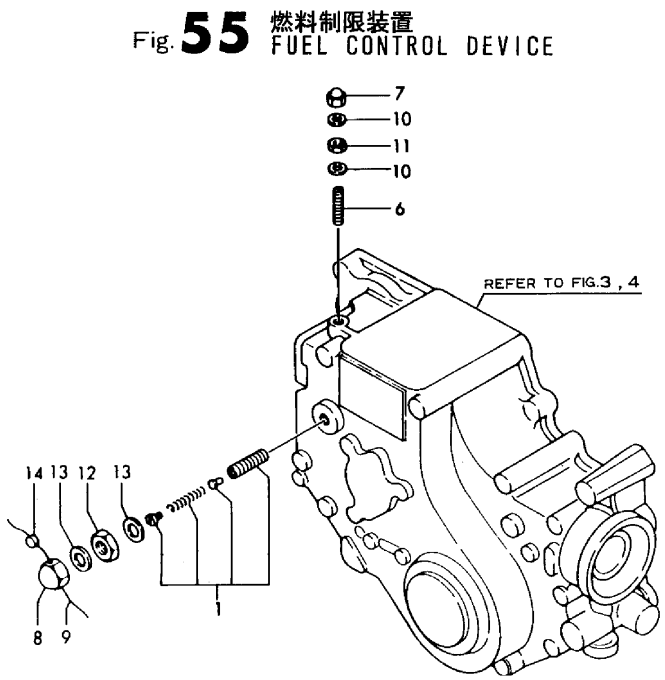

(A)=3GM30
(B)=3GM30VE
(C)=3GM30B
(D)=3GM30C
(E)=3GM30F
(F)=3GM30FVE

No.	Lev.	Parts No.	Description	Q'ty (A)	(B)	(C)	(D)	(E)	(F)	I	R
1	1	128270-66550	LIMITER ASSY, FUEL	1	1	1	1	1	1		
6	1	121575-66800	SCREW	1	1	1	1	1	1		
7	1	128170-66870	NUT, CAP M6	1	1	1	1	1	1		
8	1	128170-66880	NUT, CAP M12	1	1	1	1	1	1		
9	1	22451-100000	WIRE, 1.0	1	1	1	1	1	1		
10	1	23414-060000	GASKET, 6X1.0	2	2	2	2	2	2		
11	1	26756-060002	NUT, LOCK M6	1	1	1	1	1	1		
12	1	128170-66890	NUT, M12	1	1	1	1	1	1		
13	1	43400-500450	SEAL WASHER 12S	2	2	2	2	2	2		
14	1	135210-61090	LEAD	1	1	1	1	1	1		

N:Old $\frac{\text{Yes}}{\text{No}}$ New, Q:Old $\frac{\text{No}}{\text{Yes}}$ New, R:Old $\frac{\text{Yes}}{\text{Yes}}$ New, S:Old $\frac{\text{No}}{\text{No}}$ New, W:Add, Z:Discontinued, F:Interchangeable by set, K:Q'ty Change

Copyright (C) YANMAR CO., LTD. All RightsReserved.

Fig.56. ENGINE STOP DEVICE

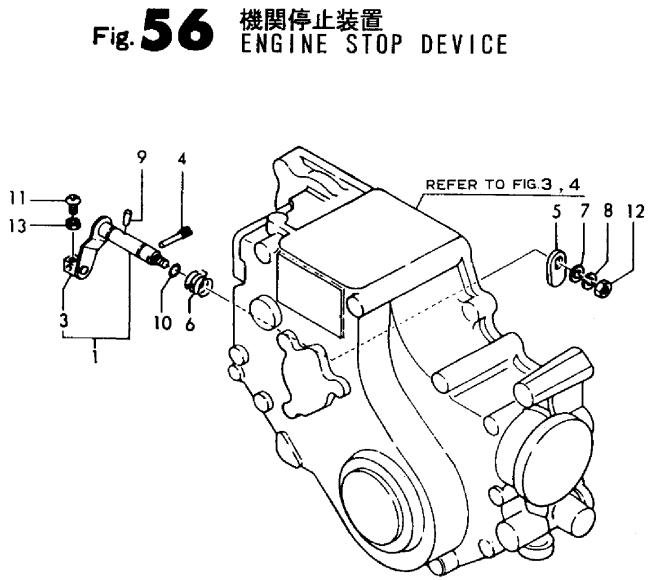

(A)=3GM30
(B)=3GM30VE
(C)=3GM30B
(D)=3GM30C
(E)=3GM30F
(F)=3GM30FVE

No.	Lev.	Parts No.	Description	Q'ty (A)	(B)	(C)	(D)	(E)	(F)	I	R
1	1	121575-66510	LEVER ASSY, STOP	1	1	1	1				
3	2	104211-03770	RETAINER	1	1	1	1				
4	1	124250-03640	SCREW	1	1	1	1				
5	1	121575-66550	CAM	1	1	1	1				
6	1	121575-66580	SPRING, RETURN	1	1	1	1				
7	1	22117-060000	WASHER, 6	1	1	1	1				
8	1	22217-060000	WASHER, SPRING 6	1	1	1	1				
9	1	22322-030160	PIN, TAPER 3X16	1	1	1	1				
10	1	24311-000070	O-RING, 1AP7.0	1	1	1	1				
11	1	26557-050122	SCREW, M5X12	1	1	1	1				
12	1	26716-060002	NUT, M6	1	1	1	1				
13	1	26756-050002	NUT, LOCK M5	1	1	1	1				

N:Old $\overset{\text{Yes}}{\underset{\text{No}}{\leftrightarrows}}$ New, Q:Old $\overset{\text{No}}{\underset{\text{Yes}}{\leftrightarrows}}$ New, R:Old $\overset{\text{Yes}}{\underset{\text{Yes}}{\leftrightarrows}}$ New, S:Old $\overset{\text{No}}{\underset{\text{No}}{\leftrightarrows}}$ New, W:Add, Z:Discontinued, F:Interchangeable by set, K:Q'ty Change

Copyright (C) YANMAR CO., LTD. All RightsReserved.

Fig.57. SPEED REMOTE CONTROL

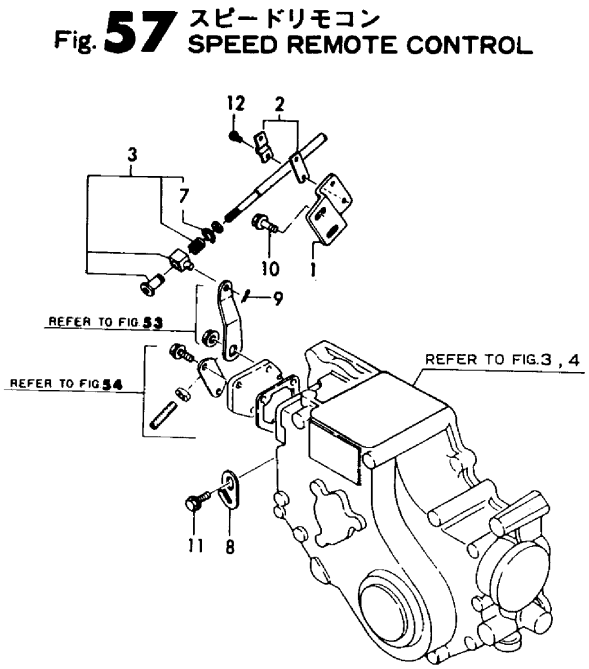

(A)=3GM30 (B)=3GM30VE (C)=3GM30B (D)=3GM30C (E)=3GM30F (F)=3GM30FVE

No.	Lev.	Parts No.	Description	Q'ty (A)	(B)	(C)	(D)	(E)	(F)	I	R
1	1	105311-67100	BRACKET, CABLE	1	1	1	1	1	1		
2	1	41710-000410	CLAMP	1	1	1	1	1	1		
3	1	105311-67200	RETAINER ASSY	1	1	1	1	1	1		
7	2	22242-000100	RING, 10	1	1	1	1	1	1		
8	1	121575-67580	BRACKET, CABLE	1		1	1	1			
8-1	1	121575-67581	BRACKET, CABLE	1	1	1	1	1	1	N	
	(A=E14020)		(C=E00396) (D=E01583)	(E=E14015)							
9	1	22414-250150	PIN, COTTER 2.5X15	1		1	1	1			
9-1	1	22360-080000	SNAP PIN 8	1	1	1	1	1	1	N	
	(A=E09572)		(C=E00292) (D=E01006)	(E=E09571)							
10	1	26106-060102	BOLT, M6X 10 PLATED	2	2	2	2	2	2		
11	1	26106-060122	BOLT, M6X 12 PLATED	1	1	1	1	1	1		
12	1	26557-050122	SCREW, M5X12	2	2	2	2	2	2		

N:Old $\xleftrightarrow[\text{No}]{\text{Yes}}$ New, Q:Old $\xleftrightarrow[\text{Yes}]{\text{No}}$ New, R:Old $\xleftrightarrow[\text{Yes}]{\text{Yes}}$ New, S:Old $\xleftrightarrow[\text{No}]{\text{No}}$ New, W:Add, Z:Discontinued, F:Interchangeable by set, K:Q'ty Change

Copyright (C) YANMAR CO., LTD. All RightsReserved.

Fig.58. HAND START

(A)=3GM30
(B)=3GM30VE
(C)=3GM30B
(D)=3GM30C
(E)=3GM30F
(F)=3GM30FVE

Fig. 58 ハンドスタート HAND START

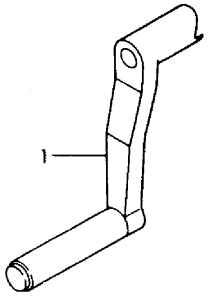

No.	Lev.	Parts No.	Description	Q'ty (A)	(B)	(C)	(D)	(E)	(F)	I	R
1	1	128170-76790	HANDLE, STARTING	1	1		1				

N:Old ◄Yes/No► New, Q:Old ◄No/Yes► New, R:Old ◄Yes/Yes► New, S:Old ◄No/No► New, W:Add, Z:Discontinued, F:Interchangeable by set, K:Q'ty Change

Copyright (C) YANMAR CO., LTD. All RightsReserved.

Fig.59. STARTING MOTOR

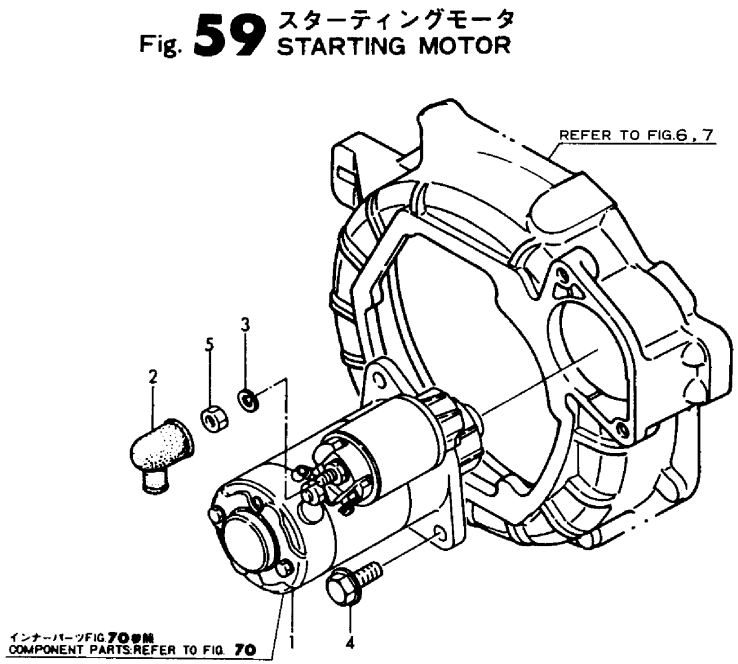

(A)=3GM30 (B)=3GM30VE (C)=3GM30B (D)=3GM30C (E)=3GM30F (F)=3GM30FVE

No.	Lev.	Parts No.	Description	Q'ty (A)	(B)	(C)	(D)	(E)	(F)	I	R
1	1	128170-77010	STARTER, S114-303	1	1	1	1	1	1		
2	1	124550-77030	COVER, TERMINAL	1	1	1	1	1	1		
3	1	22217-080000	WASHER, SPRING 8	1	1	1	1	1	1		
4	1	26106-100302	BOLT, M10X 30 PLATED	2	2	2	2	2	2		
5	1	26756-080002	NUT, LOCK M8	1	1	1	1	1	1		

N:Old $\overset{\text{Yes}}{\underset{\text{No}}{\leftrightarrows}}$ New, Q:Old $\overset{\text{No}}{\underset{\text{Yes}}{\leftrightarrows}}$ New, R:Old $\overset{\text{Yes}}{\underset{\text{Yes}}{\leftrightarrows}}$ New, S:Old $\overset{\text{No}}{\underset{\text{No}}{\leftrightarrows}}$ New, W:Add, Z:Discontinued, F:Interchangeable by set, K:Q'ty Change

Copyright (C) YANMAR CO., LTD. All RightsReserved.

Fig.60. GENERATOR

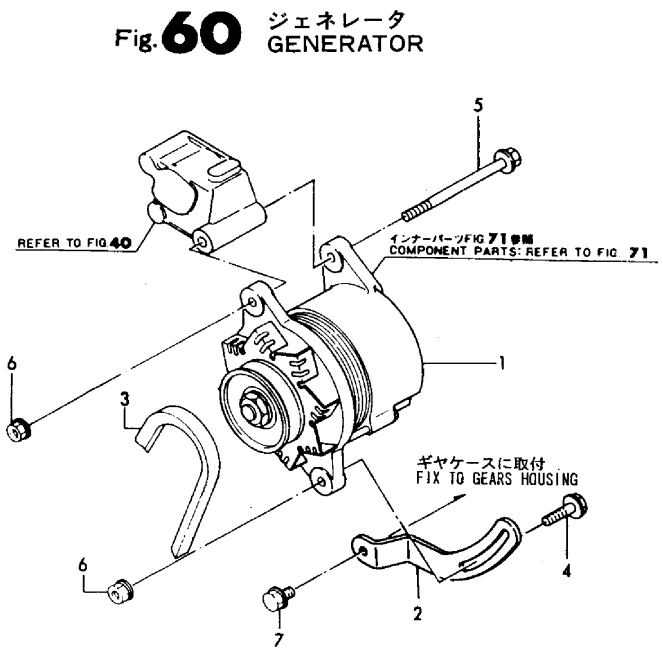

(A)=3GM30 (B)=3GM30VE (C)=3GM30B (D)=3GM30C (E)=3GM30F (F)=3GM30FVE

No.	Lev.	Parts No.	Description	Q'ty (A)	(B)	(C)	(D)	(E)	(F)	I	R
1	1	129772-77200	GENERATOR ASSY, 55A	1	1	1	1				
2	1	128271-77330	ADJUSTER	1	1	1	1				
3	1	128670-77350	V-BELT, A31	1	1	1	1				
4	1	26106-080302	BOLT, M8X 30 PLATED	1	1	1	1				
5	1	128271-77340	BOLT, M8X120	1	1	1	1				
6	1	26366-080002	NUT, M8	2	2	2	2				
7	1	26106-100162	BOLT, M10X 16 PLATED	1		1	1			Z	
	(A=EXXX)		(C=EXXX) (D=EXXX)								

N:Old $\frac{\text{Yes}}{\text{No}}$ New, Q:Old $\frac{\text{No}}{\text{Yes}}$ New, R:Old $\frac{\text{Yes}}{\text{Yes}}$ New, S:Old $\frac{\text{No}}{\text{No}}$ New, W:Add, Z:Discontinued, F:Interchangeable by set, K:Q'ty Change

Copyright (C) YANMAR CO., LTD. All RightsReserved.

Fig.61. GENERATOR

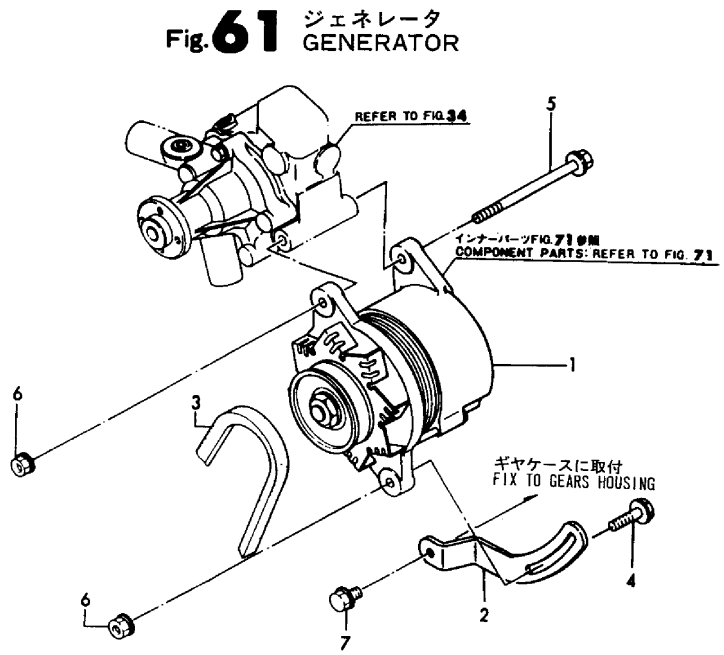

(A)=3GM30
(B)=3GM30VE
(C)=3GM30B
(D)=3GM30C
(E)=3GM30F
(F)=3GM30FVE

No.	Lev.	Parts No.	Description	Q'ty (A)	(B)	(C)	(D)	(E)	(F)	I	R
1	1	129772-77200	GENERATOR ASSY, 55A					1	1		
2	1	128271-77330	ADJUSTER					1	1		
3	1	124732-42290	V-BELT, AX37					1	1		
4	1	26106-080302	BOLT, M8X 30 PLATED					1	1		
5	1	128271-77340	BOLT, M8X120					1	1		
6	1	26366-080002	NUT, M8					2	2		
7	1	26106-100162	BOLT, M10X 16 PLATED					1		Z	
			(E=EXXX)								

N:Old $\xleftarrow[\text{No}]{\text{Yes}}$ New, Q:Old $\xleftarrow[\text{Yes}]{\text{No}}$ New, R:Old $\xleftarrow[\text{Yes}]{\text{Yes}}$ New, S:Old $\xleftarrow[\text{No}]{\text{No}}$ New, W:Add, Z:Discontinued, F:Interchangeable by set, K:Q'ty Change

Copyright (C) YANMAR CO., LTD. All RightsReserved.

Fig.62. BATTERY SWITCH

Fig. 62 バッテリスイッチ BATTERY SWITCH

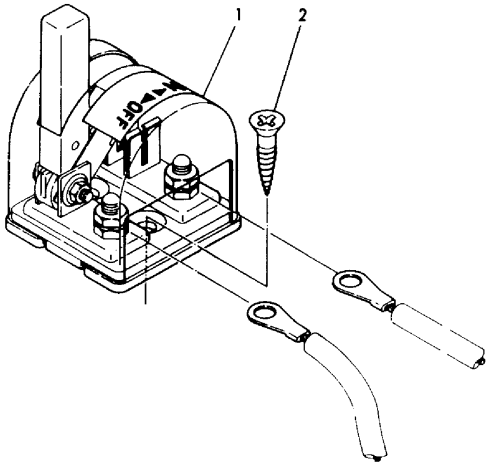

(A)=3GM30
(B)=3GM30VE
(C)=3GM30B
(D)=3GM30C
(E)=3GM30F
(F)=3GM30FVE

No.	Lev.	Parts No.	Description	Q'ty (A)	(B)	(C)	(D)	(E)	(F)	I	R
1	1	123310-77640	SWITCH, BATTERY	1	1	1	1	1	1		1
2	1	22724-800380	SCREW, 8.0X38	2	2	2	2	2	2		1

Remarks
1)OPTIONAL FOR 3GM30,3GM30VE,3GM30C,
3GM30F & 3GM30FVE

N:Old $\xleftarrow[\text{No}]{\text{Yes}}$ New, Q:Old $\xleftarrow[\text{Yes}]{\text{No}}$ New, R:Old $\xleftarrow[\text{Yes}]{\text{Yes}}$ New, S:Old $\xleftarrow[\text{No}]{\text{No}}$ New, W:Add, Z:Discontinued, F:Interchangeable by set, K:Q'ty Change

Copyright (C) YANMAR CO., LTD. All RightsReserved.

Fig.63. WIRE HARNESS

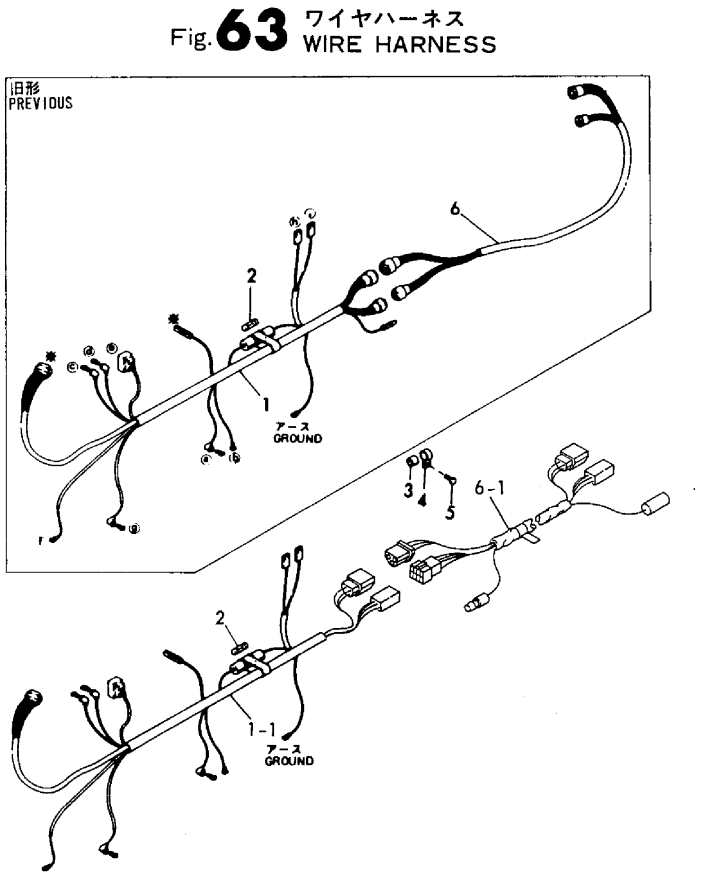

(A)=3GM30 (B)=3GM30VE (C)=3GM30B (D)=3GM30C (E)=3GM30F (F)=3GM30FVE

No.	Lev.	Parts No.	Description	Q'ty (A)	(B)	(C)	(D)	(E)	(F)	I	R
1	1	128270-77921	HARNESS, WIRE	1		1	1	1			
1-1	1	128271-77920	HARNESS, WIRE	1		1	1	1		S	
	(A=E14020)		(C=E00396) (D=E01583)	(E=E14015)							
1-2	1	128271-77921	HARNESS, WIRE	1	1	1	1	1	1	N	
	(A=E14187)		(C=E00396) (D=E01643)	(E=E14181)							
2	2	46150-003680	FUSE 30A	1	1	1	1	1	1		
3	1	124770-77940	PROTECTOR	1	1	1	1	1	1		
4	1	124070-77950	CLAMP	1	1	1	1	1	1		
5	1	26106-080142	BOLT, M8X 14 PLATED	1	1	1	1	1	1		
6	1	128170-77500	CORD, EXTENSION 3000	1		1	1	1			
6-1	1	128391-77700	HARNESS, WIRE	1	1	1	1	1	1	S	
	(A=E14020)		(C=E00396) (D=E01583)	(E=E14015)							

N:Old $\xleftrightarrow[\text{No}]{\text{Yes}}$ New, Q:Old $\xleftrightarrow[\text{Yes}]{\text{No}}$ New, R:Old $\xleftrightarrow[\text{Yes}]{\text{Yes}}$ New, S:Old $\xleftrightarrow[\text{No}]{\text{No}}$ New, W:Add, Z:Discontinued, F:Interchangeable by set, K:Q'ty Change

Copyright (C) YANMAR CO., LTD. All RightsReserved.

Fig.64. CLUTCH & DAMPER DISC

この項目には、イラスト表現はしていません。
The parts of this figure are not illustrated.

(A)=3GM30 (B)=3GM30VE (C)=3GM30B (D)=3GM30C (E)=3GM30F (F)=3GM30FVE

No.	Lev.	Parts No.	Description	Q'ty (A)	(B)	(C)	(D)	(E)	(F)	I	R
1	1	128371-81010	CLUTCH ASSY, 2.36	1		1		1			
1-1	1	128374-81110	CLUTCH ASSY, 2.36	1		1		1		N	
	(A=E01888)		(C=E00146)	(E=E01888)							
2	1	128371-81020	CLUTCH ASSY, I=2.61	1		1		1			
2-1	1	128374-81120	CLUTCH ASSY, I=2.61	1		1		1		N	
	(A=E01888)		(C=E00146)	(E=E01888)							
3	1	128371-81030	CLUTCH ASSY, I=3.20	1				1			
3-1	1	128374-81130	CLUTCH ASSY, I=3.20	1				1		N	
	(A=E01888)			(E=E01888)							
4	1	128371-81050	DISK, DAMPER D170	1		1		1			
4-1	1	177070-03501	DISK, DAMPER D170	1	1	1		1	1	N	
	(A=E11483)		(C=E00343)	(E=E11458)							
5	1	26013-080142	BOLT, M8X 14	6	6	6		6	6		
6	1	26106-080282	BOLT, M8X 28 PLATED	8		8		8			
6-1	1	26106-080502	BOLT, M8X 50 PLATED			8				S	
			(C=E00109)								
6-2	1	26106-080282	BOLT, M8X 28 PLATED			8				S	
			(C=E00146)								
7	1	128171-81150	SPACER, CLUTCH			1				W	
			(C=E00109)								
7-1	1	128171-81150	SPACER, CLUTCH			1				Z	
			(C=E00146)								
8	1	128374-81310	CLUTCH ASSY, 2.36		1				1		
9	1	128374-81320	CLUTCH ASSY, I=2.61		1				1		
10	1	128374-81330	CLUTCH ASSY, I=3.20		1				1		

N:Old $\overset{\text{Yes}}{\underset{\text{No}}{\leftrightarrows}}$ New, Q:Old $\overset{\text{No}}{\underset{\text{Yes}}{\leftrightarrows}}$ New, R:Old $\overset{\text{Yes}}{\underset{\text{Yes}}{\leftrightarrows}}$ New, S:Old $\overset{\text{No}}{\underset{\text{No}}{\leftrightarrows}}$ New, W:Add, Z:Discontinued, F:Interchangeable by set, K:Q'ty Change

Copyright (C) YANMAR CO., LTD. All RightsReserved.

Fig.65. DUMPER DISK(FOR SAIL DRIVE)

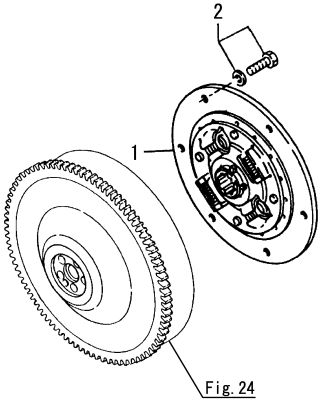

(A)=3GM30
(B)=3GM30VE
(C)=3GM30B
(D)=3GM30C
(E)=3GM30F
(F)=3GM30FVE

No.	Lev.	Parts No.	Description	Q'ty (A)	(B)	(C)	(D)	(E)	(F)	I	R
1	1	128371-81050	DISK, DAMPER D170				1				
1-1	1	177070-03501	DISK, DAMPER D170 (D=E01177)				1			N	
2	1	26013-080142	BOLT, M8X 14				6				

N:Old $\xleftarrow[\text{No}]{\text{Yes}}$ New, Q:Old $\xleftarrow[\text{Yes}]{\text{No}}$ New, R:Old $\xleftarrow[\text{Yes}]{\text{Yes}}$ New, S:Old $\xleftarrow[\text{No}]{\text{No}}$ New, W:Add, Z:Discontinued, F:Interchangeable by set, K:Q'ty Change

Copyright (C) YANMAR CO., LTD. All RightsReserved.

Fig.66. TAPER COUPLING

Fig. 66 テーパカップリング TAPER COUPLING

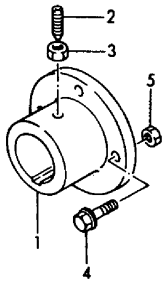

(A)=3GM30
(B)=3GM30VE
(C)=3GM30B
(D)=3GM30C
(E)=3GM30F
(F)=3GM30FVE

No.	Lev.	Parts No.	Description	Q'ty (A)	(B)	(C)	(D)	(E)	(F)	I	R
1	1	48110-028063	COUPLING, TAPER 28	1	1	1					1
1-1	1	48110-025063	COUPLING, TAPER 25 (C=E00364)			1				N	
2	1	48110-032411	SCREW	1	1	1					1
3	1	26756-080002	NUT, LOCK M8	1	1	1					1
4	1	26106-100322	BOLT, M10X 32 PLATED	4	4	4					1
5	1	26706-100002	NUT, M10	4	4	4					1

Remarks
1)OPTIONAL FOR 3GM30 & 3GM30VE

N:Old $\xleftrightarrow[\text{No}]{\text{Yes}}$ New, Q:Old $\xleftrightarrow[\text{Yes}]{\text{No}}$ New, R:Old $\xleftrightarrow[\text{Yes}]{\text{Yes}}$ New, S:Old $\xleftrightarrow[\text{No}]{\text{No}}$ New, W:Add, Z:Discontinued, F:Interchangeable by set, K:Q'ty Change

Copyright (C) YANMAR CO., LTD. All RightsReserved.

Fig.67. CLUTCH REMOTE CONTROL

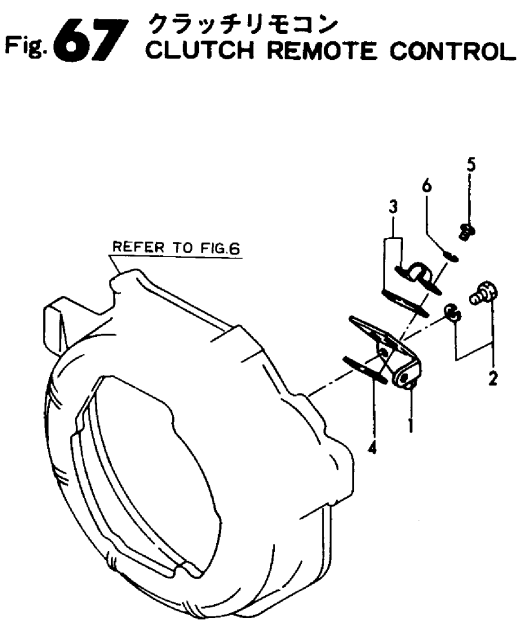

(A)=3GM30
(B)=3GM30VE
(C)=3GM30B
(D)=3GM30C
(E)=3GM30F
(F)=3GM30FVE

No.	Lev.	Parts No.	Description	Q'ty (A)	(B)	(C)	(D)	(E)	(F)	I	R
1	1	128170-86300	BRACKET, CABLE	1	1	1		1	1		
2	1	26106-060142	BOLT, M6X 14 PLATED	2	2	2		2	2		
3	1	41710-000410	CLAMP	1	1	1		1	1		
4	1	121574-86320	RETAINER	1	1	1		1	1		
5	1	26557-050122	SCREW, M5X12	2	2	2		2	2		
6	1	22212-050000	WASHER 5	2	2	2		2	2		

N:Old $\overset{\text{Yes}}{\underset{\text{No}}{\leftrightarrows}}$ New, Q:Old $\overset{\text{No}}{\underset{\text{Yes}}{\leftrightarrows}}$ New, R:Old $\overset{\text{Yes}}{\underset{\text{Yes}}{\leftrightarrows}}$ New, S:Old $\overset{\text{No}}{\underset{\text{No}}{\leftrightarrows}}$ New, W:Add, Z:Discontinued, F:Interchangeable by set, K:Q'ty Change

Copyright (C) YANMAR CO., LTD. All RightsReserved.

Fig.68. PANEL(A-TYPE)

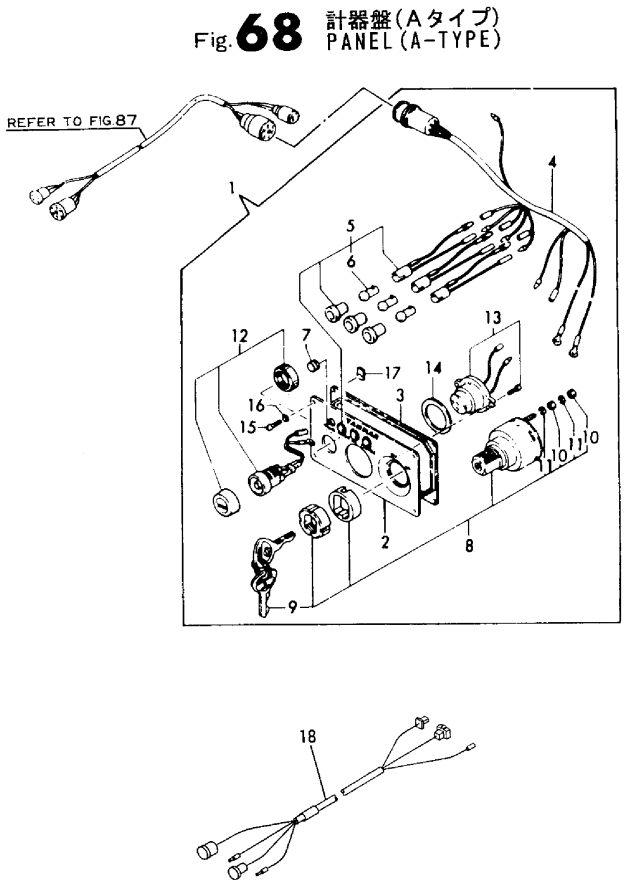

(A)=3GM30 (D)=3GM30C
(B)=3GM30VE (E)=3GM30F
(C)=3GM30B (F)=3GM30FVE

No.	Lev.	Parts No.	Description	Q'ty (A)	(B)	(C)	(D)	(E)	(F)	I	R
1	1	128270-91001	PANEL ASSY	1	1	1		1	1		1
2	2	128270-91010	BODY, PANEL	1	1	1		1	1		
3	2	128270-91020	GASKET	1	1	1		1	1		
4	2	128270-91031	HARNESS, WIRE	1	1	1		1	1		
5	2	128270-91040	LAMP, PILOT	3	3	3		3	3		
6	3	46150-001110	BULB(12V3W/G11.BA9S)	3	3	3		3	3		
7	2	128270-91230	COVER, BLIND	1	1	1		1	1		
8	2	124070-91250	SWITCH, KEY	1	1	1		1	1		
9	3	124070-91290	KEY, SWITCH	1	1	1		1	1		
10	3	26716-050002	NUT, M5	4	4	4		4	4		
11	3	22217-050000	WASHER, SPRING 5	4	4	4		4	4		
12	2	124070-91300	SWITCH	1	1	1		1	1		
13	2	128270-91350	BUZZER, ALARM	1	1	1		1	1		
14	2	128270-91360	GASKET	1	1	1		1	1		
15	2	128170-91810	SCREW, M5X35	4	4	4		4	4		
16	2	128170-91820	WASHER, 5	4	4	4		4	4		
17	2	128170-91830	NUT, M5	4	4	4		4	4		
18	1	128391-77860	HARNESS ASSY, WIRE	1	1	1		1	1	W	1
	(A=E14020)		(C=E00396)	(E=E14015)							

Remarks
1)OPTIONAL FOR 3GM30,3GM30VE,3GM30F,
3GM30FVE

N:Old ←Yes/No→ New, Q:Old ←No/Yes→ New, R:Old ←Yes/Yes→ New, S:Old ←No/No→ New, W:Add, Z:Discontinued, F:Interchangeable by set, K:Q'ty Change

Copyright (C) YANMAR CO., LTD. All RightsReserved.

Fig.69. TOOL

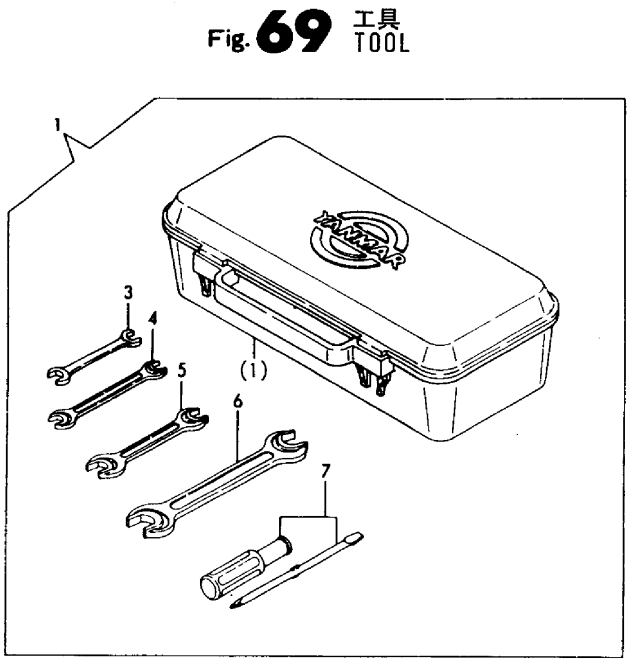

(A)=3GM30
(B)=3GM30VE
(C)=3GM30B
(D)=3GM30C
(E)=3GM30F
(F)=3GM30FVE

No.	Lev.	Parts No.	Description	Q'ty (A)	(B)	(C)	(D)	(E)	(F)	I	R
1	1	704507-92100	BOX ASSY, TOOL	1	1	1	1	1	1		
3	2	28110-100130	SPANNER, 10X13	1	1	1	1	1	1		
4	2	28110-120140	SPANNER, 12X14	1	1	1	1	1	1		
5	2	28110-170190	SPANNER, 17X19	1	1	1	1	1	1		
6	2	28110-220240	SPANNER, 22X24	1	1	1	1	1	1		
7	2	104200-92350	SCREW-DRIVER	1	1	1	1	1	1		

N:Old $\xleftrightarrow[\text{No}]{\text{Yes}}$ New, Q:Old $\xleftrightarrow[\text{Yes}]{\text{No}}$ New, R:Old $\xleftrightarrow[\text{Yes}]{\text{Yes}}$ New, S:Old $\xleftrightarrow[\text{No}]{\text{No}}$ New, W:Add, Z:Discontinued, F:Interchangeable by set, K:Q'ty Change

Copyright (C) YANMAR CO., LTD. All RightsReserved.

Fig.70. STARTING MOTOR COMPONENT PART

Fig. 70 スターティングモータ インナーパーツ
STARTING MOTOR COMPONENT PART

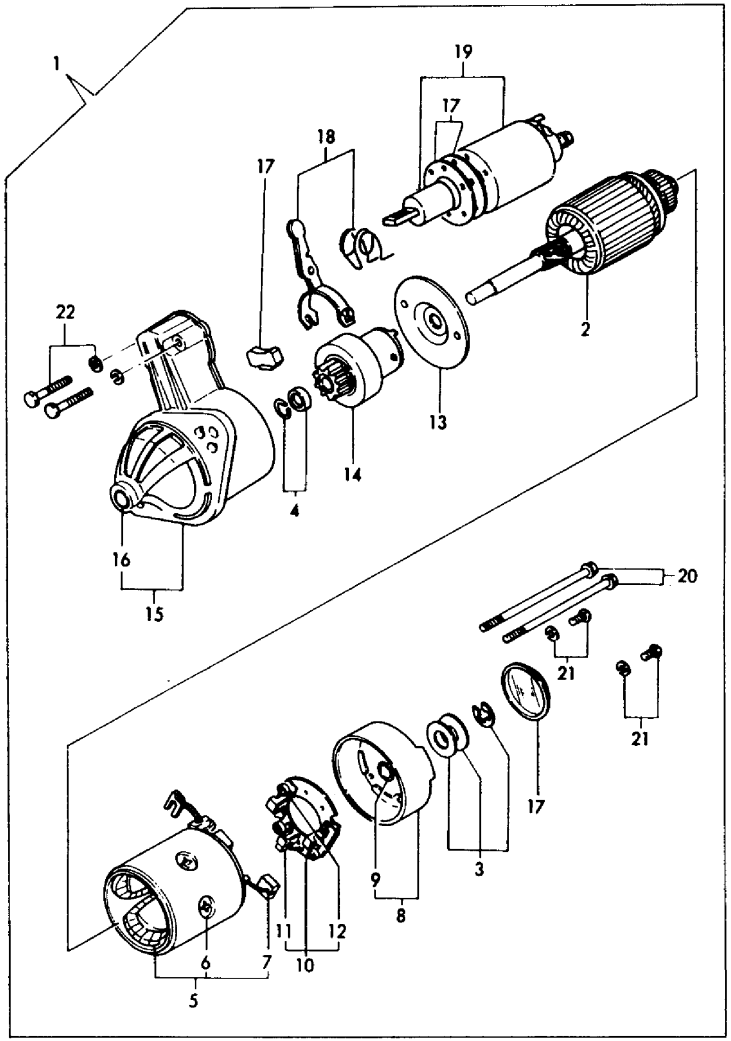

(A)=3GM30
(B)=3GM30VE
(C)=3GM30B
(D)=3GM30C
(E)=3GM30F
(F)=3GM30FVE

No.	Lev.	Parts No.	Description	Q'ty (A)	(B)	(C)	(D)	(E)	(F)	I	R
1	1	128170-77010	STARTER, S114-303	1	1	1	1	1	1		
2	2	X211451005	ARMATURE	1	1	1	1	1	1		
3	2	X21148110	WASHER SET, THRUST	1	1	1	1	1	1		
4	2	X21147155	STOPPER SET, PINION	1	1	1	1	1	1		
5	2	X211462101	COIL ASSY, FIELD	1	1	1	1	1	1		
6	3	X21143215	SCREW, CORE	4	4	4	4	4	4		
7	3	X21145312	BRUSH, +	2	2	2	2	2	2		
8	2	X211413005	COVER ASSY	1	1	1	1	1	1		
9	3	X21145352	METAL	1	1	1	1	1	1		
10	2	X211433101	HOLDER	1	1	1	1	1	1		
11	3	X21148313	BRUSH (-)	2	2	2	2	2	2		
12	3	X2114314	SPRING	4	4	4	4	4	4		
13	2	X21144454	PLATE	1	1	1	1	1	1		
14	2	X211415006	PINION ASSY	1	1	1	1	1	1		
15	2	X211476503	CASE ASSY	1	1	1	1	1	1		
16	3	X21144661	METAL, GEAR CASE	1	1	1	1	1	1		
17	2	X21146963	COVER	1	1	1	1	1	1		
18	2	X21149652	LEVER SET, SHIFT	1	1	1	1	1	1		
19	2	X211447009	SWITCH	1	1	1	1	1	1		
20	2	X21148852	BOLT, THROUGH	2	2	2	2	2	2		
21	2	X21142835	SCREW SET	2	2	2	2	2	2		
22	2	X21145866	BOLT	2	2	2	2	2	2		

N:Old $\frac{\text{Yes}}{\text{No}}$ New, Q:Old $\frac{\text{No}}{\text{Yes}}$ New, R:Old $\frac{\text{Yes}}{\text{Yes}}$ New, S:Old $\frac{\text{No}}{\text{No}}$ New, W:Add, Z:Discontinued, F:Interchangeable by set, K:Q'ty Change

Copyright (C) YANMAR CO., LTD. All RightsReserved.

Fig.71. GENERATOR COMPONENT PART

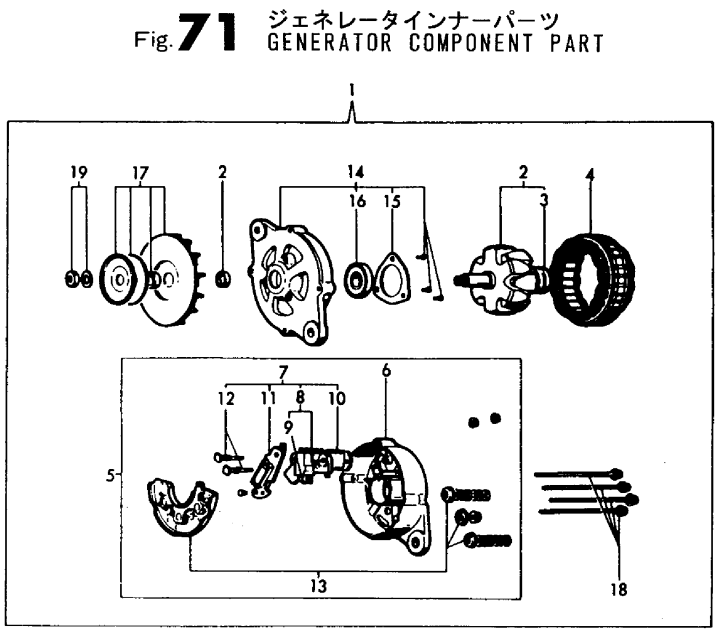

(A)=3GM30 (B)=3GM30VE (C)=3GM30B (D)=3GM30C (E)=3GM30F (F)=3GM30FVE

No.	Lev.	Parts No.	Description	Q'ty (A)	(B)	(C)	(D)	(E)	(F)	I	R
1	1	129772-77200	GENERATOR ASSY, 55A	1	1	1	1	1	1		
2	2	XL15571001	ROTOR ASSY	1	1	1	1	1	1		
3	3	X6201SD	BALL BEARING	1	1	1	1	1	1		
4	2	XL15542001	STATOR ASSY	1	1	1	1	1	1		
5	2	XL15553002	COVER ASSY, REAR	1	1	1	1	1	1		
6	3	XL22553012	COVER, REAR	1	1	1	1	1	1		
7	3	XL1556315	REGULATOR ASSY,BRUSH	1	1	1	1	1	1		
8	4	XL2255330	BRUSH ASSY	1	1	1	1	1	1		1
9	4	XL12013262	BRUSH	2	2	2	2	2	2		
10	4	XTR1Z63	REGULATOR	1	1	1	1	1	1		
11	4	XL2251318	CONDENCER ASSY	1	1	1	1	1	1		
12	4	XL13513134	BOLT M5	2	2	2	2	2	2		
13	3	XL2253320	DIODE ASSY	1	1	1	1	1	1		
14	2	XL2253400	FRONT COVER ASSY	1	1	1	1	1	1		
15	3	XL15014042	BEARING RETAINER	1	1	1	1	1	1		
16	3	X6203BM	BALL BEARING	1	1	1	1	1	1		
17	2	XL22555001	PULLEY ASSY	1		1	1	1			
17-1	2	XL1557500	PULLEY ASSY	1	1	1	1	1	1	N	
	(A=E06576)		(C=E00254) (D=E00686)	(E=E06565)							
18	2	XL15018015	BOLT, THROUGH	4	4	4	4	4	4		
19	2	XL1501810	NUT ASSY, PULLEY	1	1	1	1	1	1		
20	2	XL15028001	SCREW ASSY	1	1	1	1	1	1		2

Remarks
2) NOT ILLUSTRATED

N:Old $\xleftarrow[\text{No}]{\text{Yes}}$ New, Q:Old $\xleftarrow[\text{Yes}]{\text{No}}$ New, R:Old $\xleftarrow[\text{Yes}]{\text{Yes}}$ New, S:Old $\xleftarrow[\text{No}]{\text{No}}$ New, W:Add, Z:Discontinued, F:Interchangeable by set, K:Q'ty Change

Copyright (C) YANMAR CO., LTD. All RightsReserved.

Fig.72. MIXING ELBOW(OPTIONAL)

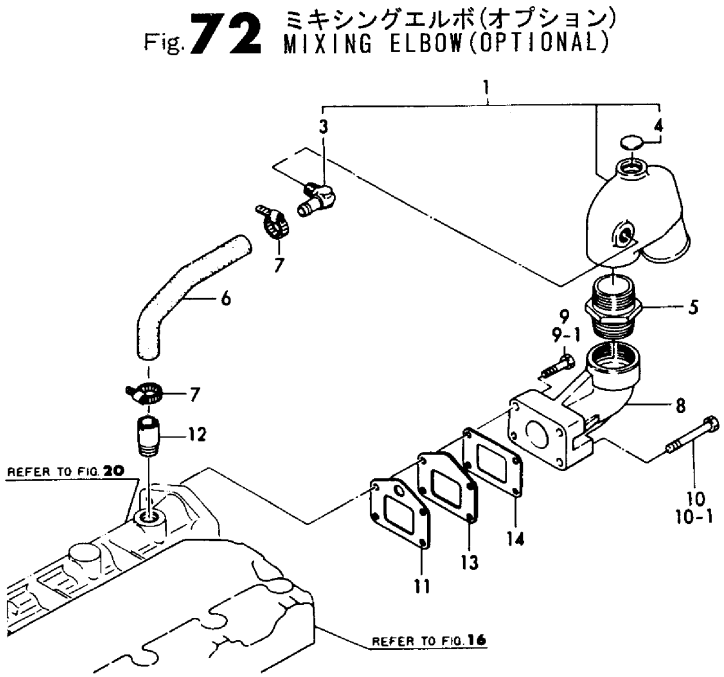

(A)=3GM30 (B)=3GM30VE (C)=3GM30B (D)=3GM30C (E)=3GM30F (F)=3GM30FVE

No.	Lev.	Parts No.	Description	Q'ty (A)	(B)	(C)	(D)	(E)	(F)	I	R
1	1	124070-13520	ELBOW	1	1	1	1				
3	2	124070-13300	ELBOW, PT3/8	1	1	1	1				
4	2	27233-250000	PLUG, 25	1	1	1	1				
5	1	104214-13580	JOINT	1	1	1	1				
6	1	128370-49250	PIPE, WATER	1	1	1	1				
7	1	23000-025000	CLAMP, 25	2	2	2	2				
8	1	128370-13610	ELBOW	1	1	1	1				
9	1	26116-080402	BOLT, M8X 40 PLATED	2		2	2				
9-1	1	26203-080452	BOLT, M8X 45 PLATED	2	2	2	2			S	
	(A=E01538)		(C=E00133) (D=E00212)								
10	1	26116-080602	BOLT, M8X 60 PLATED	2		2	2				
10-1	1	26203-080652	BOLT, M8X 65 PLATED	2	2	2	2			S	
	(A=E01538)		(C=E00133) (D=E00212)								
11	1	128370-13230	GASKET	1		1	1			W	
	(A=E01538)		(C=E00133) (D=E00212)								
11-1	1	128370-13231	GASKET	1	1	1	1			N	
	(A=E05446)		(C=E00215) (D=E00123)								
12	2	121575-49300	JOINT, PIPE	1	1	1	1			W	
	(A=E01538)		(C=E00133) (D=E00212)								
13	2	128370-13220	SPACER	1	1	1	1			W	
	(A=E01538)		(C=E00133) (D=E00212)								
14	1	128370-13200	GASKET	1		1	1				
14-1	1	128370-13201	GASKET	1	1	1	1			N	
	(A=E11532)		(C=E00343) (D=E01203)								

N:Old $\xleftarrow[\text{No}]{\text{Yes}}$ New, Q:Old $\xleftarrow[\text{Yes}]{\text{No}}$ New, R:Old $\xleftarrow[\text{Yes}]{\text{Yes}}$ New, S:Old $\xleftarrow[\text{No}]{\text{No}}$ New, W:Add, Z:Discontinued, F:Interchangeable by set, K:Q'ty Change

Copyright (C) YANMAR CO., LTD. All RightsReserved.

Fig.73. MIXING ELBOW(OPTIONAL)

Fig. 73 ミキシングエルボ(オプション)
MIXING ELBOW(OPTIONAL)

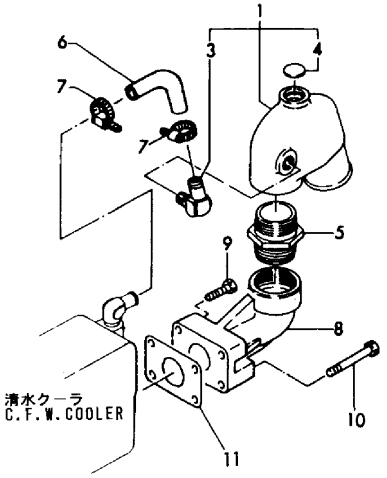

(A)=3GM30
(B)=3GM30VE
(C)=3GM30B
(D)=3GM30C
(E)=3GM30F
(F)=3GM30FVE

No.	Lev.	Parts No.	Description	Q'ty (A)	(B)	(C)	(D)	(E)	(F)	I	R
1	1	124070-13520	ELBOW					1	1		
3	2	124070-13300	ELBOW, PT3/8					1	1		
4	2	27233-250000	PLUG, 25					1	1		
5	1	104214-13580	JOINT					1	1		
6	1	128690-49250	PIPE, WATER					1	1		
7	1	23000-025000	CLAMP, 25					2	2		
8	1	128370-13610	ELBOW					1	1		
9	1	26203-080402	BOLT, M8X 40 PLATED					2	2		
10	1	26203-080602	BOLT, M8X 60 PLATED					2	2		
11	1	128370-13200	GASKET					1		W	
				(E=FROM 1ST)							
11-1	1	128370-13201	GASKET					1	1	N	
				(E=E11515)							

N:Old $\xleftarrow[\text{No}]{\text{Yes}}$ New, Q:Old $\xleftarrow[\text{Yes}]{\text{No}}$ New, R:Old $\xleftarrow[\text{Yes}]{\text{Yes}}$ New, S:Old $\xleftarrow[\text{No}]{\text{No}}$ New, W:Add, Z:Discontinued, F:Interchangeable by set, K:Q'ty Change

Copyright (C) YANMAR CO., LTD. All RightsReserved.

Fig.74. LUB.OIL WASTE PUMP(OPTIONAL)

(A)=3GM30
(B)=3GM30VE
(C)=3GM30B
(D)=3GM30C
(E)=3GM30F
(F)=3GM30FVE

Fig. 74 潤滑油排油ポンプ(オプション)
LUB.OIL WASTE PUMP(OPTIONAL)

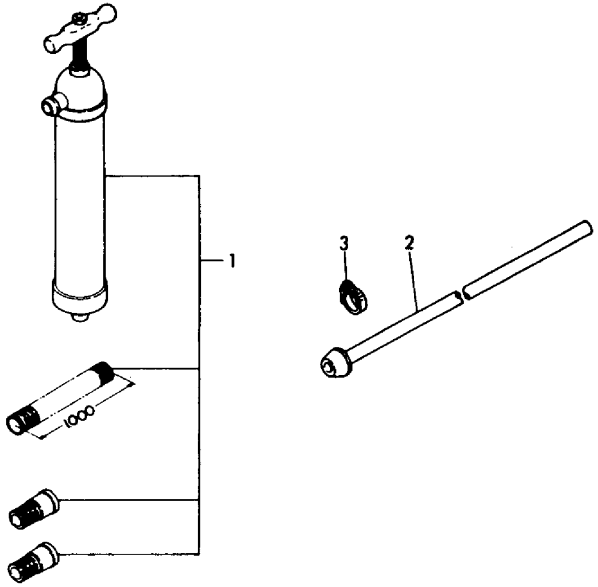

No.	Lev.	Parts No.	Description	Q'ty (A)	(B)	(C)	(D)	(E)	(F)	I	R
1	1	28210-000080	PUMP	1	1	1	1	1	1		
2	1	128275-39710	PIPE, OIL	1	1	1	1	1	1		
3	1	23080-018000	CLAMP, 18	3	3	3	3	3	3		

N:Old ◄Yes/No► New, Q:Old ◄No/Yes► New, R:Old ◄Yes/Yes► New, S:Old ◄No/No► New, W:Add, Z:Discontinued, F:Interchangeable by set, K:Q'ty Change

Copyright (C) YANMAR CO., LTD. All RightsReserved.

Fig.75. ELECTRIC BILGE PUMP(12V)(OP)

P/C NEWS No:Y00F5062-4
PUBLISHED:2004/7

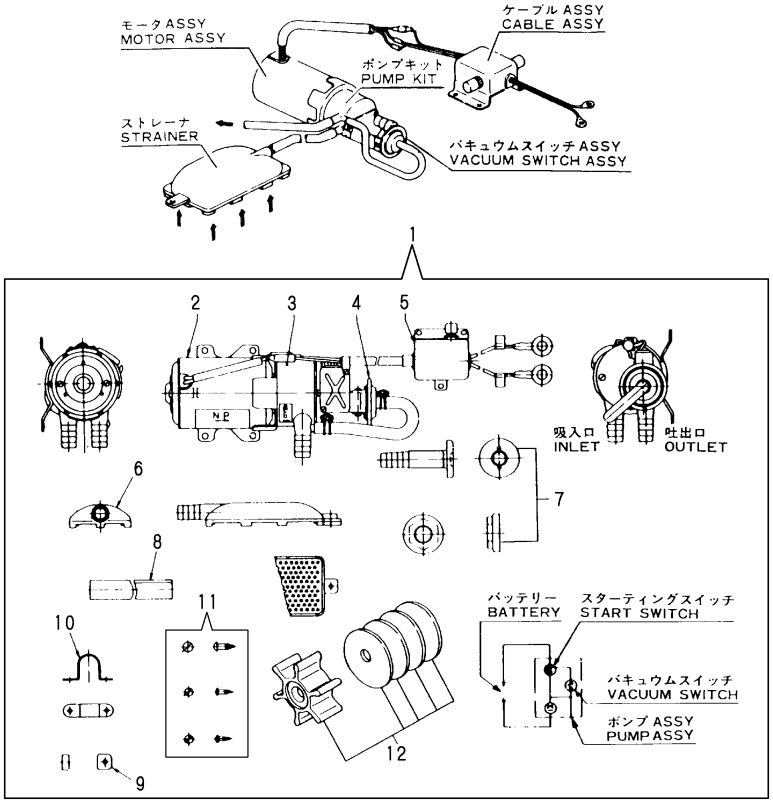

(A)=3GM30 (B)=3GM30VE (C)=3GM30B (D)=3GM30C (E)=3GM30F (F)=3GM30FVE

No.	Lev.	Parts No.	Description	Q'ty (A)	(B)	(C)	(D)	(E)	(F)	I	R
1	1	977782-00122	PUMP(12V), BILGE	1	1	1	1	1	1		
2	2	XBP2901200	MOTOR ASSY.	1	1	1	1	1	1		M
2-1	2	XBP1902200	MOTER ASSY	1	1	1	1	1	1		
3	2	XBP1901300	PUMP SET	1	1	1	1	1	1		
4	2	XBP1902400	VACUUM SWITCH ASSY	1	1	1	1	1	1		
5	2	XBP1905500	CABLE ASSY.	1	1	1	1	1	1		
6	2	XBP1902810	STRAINER	1	1	1	1	1	1		
7	2	XBP1901820	OUTLET	1	1	1	1	1	1		
8	2	XBP1901830	HOSE	1	1	1	1	1	1		
9	2	XBP1901910	SPACER	1	1	1	1	1	1		
10	2	XBP1901920	CLAMP	1	1	1	1	1	1		
11	2	XBP1901950	SCREW SET	1	1	1	1	1	1		
12	2	947859-20010	IMPELLER	1	1	1	1	1	1		

Remarks
(M)MISPRINT:REFER TO THE NEXT ITEM.

N:Old $\overset{\text{Yes}}{\underset{\text{No}}{\leftrightarrow}}$ New, Q:Old $\overset{\text{No}}{\underset{\text{Yes}}{\leftrightarrow}}$ New, R:Old $\overset{\text{Yes}}{\underset{\text{Yes}}{\leftrightarrow}}$ New, S:Old $\overset{\text{No}}{\underset{\text{No}}{\leftrightarrow}}$ New, W:Add, Z:Discontinued, F:Interchangeable by set, K:Q'ty Change

Copyright (C) YANMAR CO., LTD. All RightsReserved.

Fig.76. KINGSTON COCK(OPTIONAL)

Fig.76 キングストンコック(オプション)
KINGSTON COCK(OPTIONAL)

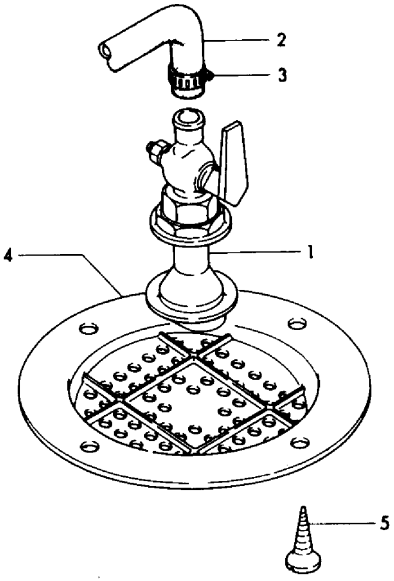

(A)=3GM30
(B)=3GM30VE
(C)=3GM30B
(D)=3GM30C
(E)=3GM30F
(F)=3GM30FVE

No.	Lev.	Parts No.	Description	Q'ty (A)	(B)	(C)	(D)	(E)	(F)	I	R
1	1	43662-015020	COCK					1	1		
2	1	124223-49050	PIPE, WATER					1	1		
3	1	23000-025000	CLAMP, 25					2	2		
4	1	43666-020951	COVER, STRAINER					1	1		
5	1	22724-800380	SCREW, 8.0X38					4	4		

N:Old $\overset{\text{Yes}}{\underset{\text{No}}{\leftrightarrow}}$ New, Q:Old $\overset{\text{No}}{\underset{\text{Yes}}{\leftrightarrow}}$ New, R:Old $\overset{\text{Yes}}{\underset{\text{Yes}}{\leftrightarrow}}$ New, S:Old $\overset{\text{No}}{\underset{\text{No}}{\leftrightarrow}}$ New, W:Add, Z:Discontinued, F:Interchangeable by set, K:Q'ty Change

Copyright (C) YANMAR CO., LTD. All RightsReserved.

Fig.77. FUEL TANK(OPTIONAL)

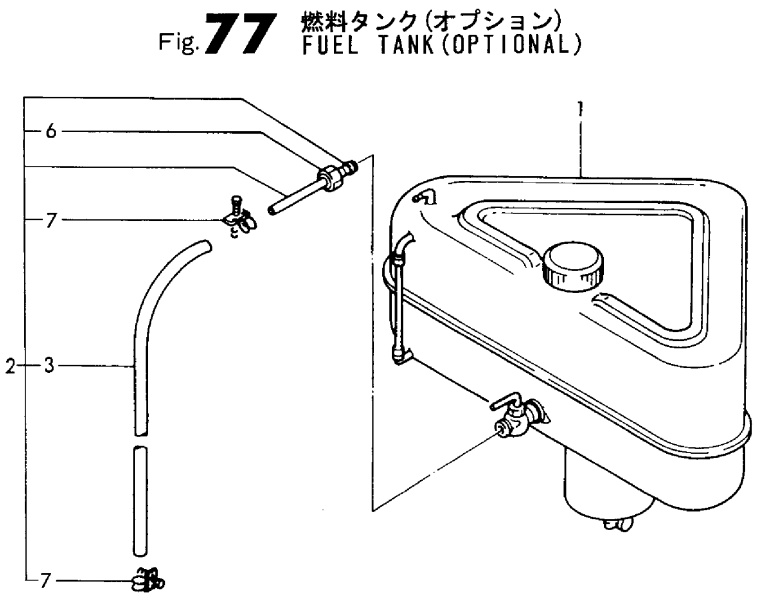

(A)=3GM30
(B)=3GM30VE
(C)=3GM30B
(D)=3GM30C
(E)=3GM30F
(F)=3GM30FVE

No.	Lev.	Parts No.	Description	Q'ty (A)	(B)	(C)	(D)	(E)	(F)	I	R
1	1	83213-003012	TANK (30L), FUEL	1	1	1	1	1	1		
2	1	124070-59060	PIPE ASSY, FUEL	1	1	1	1	1	1		
3	2	124070-59130	PIPE, FUEL 2M	1	1	1	1	1	1		
6	2	138603-59380	CAP NUT	1	1	1	1	1	1		
7	2	23010-014000	CLAMP, 14	2	2	2	2	2	2		

N:Old $\xleftarrow[\text{No}]{\text{Yes}}$ New, Q:Old $\xleftarrow[\text{Yes}]{\text{No}}$ New, R:Old $\xleftarrow[\text{Yes}]{\text{Yes}}$ New, S:Old $\xleftarrow[\text{No}]{\text{No}}$ New, W:Add, Z:Discontinued, F:Interchangeable by set, K:Q'ty Change

Copyright (C) YANMAR CO., LTD. All RightsReserved.

Fig.78. ENGINE STOP CABLE(OPTIONAL)

Fig. **78** ストップケーブル(オプション)
ENGINE STOP CABLE(OPTIONAL)

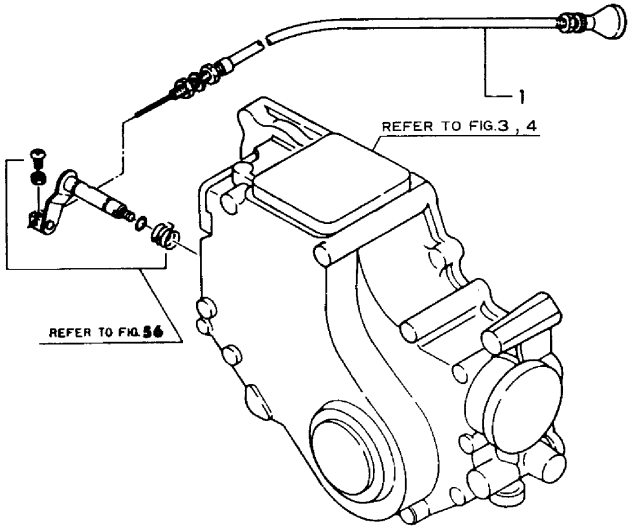

(A)=3GM30
(B)=3GM30VE
(C)=3GM30B
(D)=3GM30C
(E)=3GM30F
(F)=3GM30FVE

No.	Lev.	Parts No.	Description	Q'ty (A)	(B)	(C)	(D)	(E)	(F)	I	R
1	1	104271-67550	CABLE, STOP L=3000	1	1	1	1	1	1		

N:Old ◄Yes/No► New, Q:Old ◄No/Yes► New, R:Old ◄Yes/Yes► New, S:Old ◄No/No► New, W:Add, Z:Discontinued, F:Interchangeable by set, K:Q'ty Change

Copyright (C) YANMAR CO., LTD. All RightsReserved.

Fig.79. TAPER COUPLING(OPTIONAL)

Fig. 79 テーパカップリング(オプション)
TAPER COUPLING(OPTIONAL)

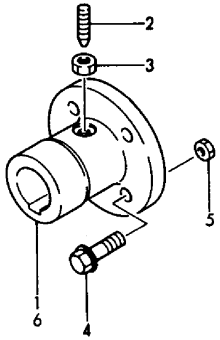

(A)=3GM30
(B)=3GM30VE
(C)=3GM30B
(D)=3GM30C
(E)=3GM30F
(F)=3GM30FVE

No.	Lev.	Parts No.	Description	Q'ty (A)	(B)	(C)	(D)	(E)	(F)	I	R
1	1	48110-032502	COUPLING, 30					1	1		1
2	1	48110-032411	SCREW					1	1		
3	1	26756-080002	NUT, LOCK M8					1	1		
4	1	26106-100322	BOLT, M10X 32 PLATED					4	4		
5	1	26706-100002	NUT, M10					4	4		
6	1	48110-028063	COUPLING, TAPER 28					1	1	W	1

(E=EXXX)

Remarks
1)SELECT PART.

N:Old $\xleftarrow[\text{No}]{\text{Yes}}$ New, Q:Old $\xleftarrow[\text{Yes}]{\text{No}}$ New, R:Old $\xleftarrow[\text{Yes}]{\text{Yes}}$ New, S:Old $\xleftarrow[\text{No}]{\text{No}}$ New, W:Add, Z:Discontinued, F:Interchangeable by set, K:Q'ty Change

Copyright (C) YANMAR CO., LTD. All RightsReserved.

Fig.80. COUPLING(OPTIONAL)

Fig. 80 カップリング(オプション) COUPLING(OPTIONAL)

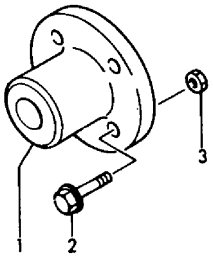

(A)=3GM30 (D)=3GM30C
(B)=3GM30VE (E)=3GM30F
(C)=3GM30B (F)=3GM30FVE

No.	Lev.	Parts No.	Description	Q'ty (A)	(B)	(C)	(D)	(E)	(F)	I	R
1	1	105583-85900	COUPLING, 22	1	1			1	1		
2	1	26106-100322	BOLT, M10X 32 PLATED	4	4			4	4		
3	1	26706-100002	NUT, M10	4	4			4	4		

N:Old $\xleftrightarrow[\text{No}]{\text{Yes}}$ New, Q:Old $\xleftrightarrow[\text{Yes}]{\text{No}}$ New, R:Old $\xleftrightarrow[\text{Yes}]{\text{Yes}}$ New, S:Old $\xleftrightarrow[\text{No}]{\text{No}}$ New, W:Add, Z:Discontinued, F:Interchangeable by set, K:Q'ty Change

Copyright (C) YANMAR CO., LTD. All RightsReserved.

Fig.81. STRAIGHT COUPLING(OPTIONAL)

Fig. **81** ストレートカップリング(オプション)
STRAIGHT COUPLING(OPTIONAL)

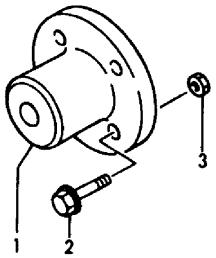

(A)=3GM30
(B)=3GM30VE
(C)=3GM30B
(D)=3GM30C
(E)=3GM30F
(F)=3GM30FVE

No.	Lev.	Parts No.	Description	Q'ty (A)	(B)	(C)	(D)	(E)	(F)	I	R
1	1	45414-500260	COUPLING, 16MM	1	1			1	1		
2	1	26106-100322	BOLT, M10X 32 PLATED	4	4			4	4		
3	1	26706-100002	NUT, M10	4	4			4	4		

N:Old $\xleftrightarrow[\text{No}]{\text{Yes}}$ New, Q:Old $\xleftrightarrow[\text{Yes}]{\text{No}}$ New, R:Old $\xleftrightarrow[\text{Yes}]{\text{Yes}}$ New, S:Old $\xleftrightarrow[\text{No}]{\text{No}}$ New, W:Add, Z:Discontinued, F:Interchangeable by set, K:Q'ty Change

Copyright (C) YANMAR CO., LTD. All RightsReserved.

Fig.82. SLIT COUPLING(OPTIONAL)

Fig. **82** スリットカップリング(オプション)
SLIT COUPLING(OPTIONAL)

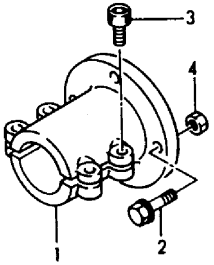

(A)=3GM30 (D)=3GM30C
(B)=3GM30VE (E)=3GM30F
(C)=3GM30B (F)=3GM30FVE

No.	Lev.	Parts No.	Description	Q'ty (A)	(B)	(C)	(D)	(E)	(F)	I	R
1	1	104214-83980	COUPLING	1	1	1		1	1		
2	1	26106-100322	BOLT, M10X 32 PLATED	4	4	4		4	4		
3	1	26450-080282	BOLT, M8X 28	4	4	4		4	4		
4	1	26706-100002	NUT, M10	4	4	4		4	4		

N:Old $\xleftrightarrow[\text{No}]{\text{Yes}}$ New, Q:Old $\xleftrightarrow[\text{Yes}]{\text{No}}$ New, R:Old $\xleftrightarrow[\text{Yes}]{\text{Yes}}$ New, S:Old $\xleftrightarrow[\text{No}]{\text{No}}$ New, W:Add, Z:Discontinued, F:Interchangeable by set, K:Q'ty Change

Copyright (C) YANMAR CO., LTD. All RightsReserved.

Fig.83. SINGLE LEVER CONTROL(OPTIONAL)

Fig. **83** シングルレバーコントロール(オプション)
SINGLE LEVER CONTROL(OPTIONAL)

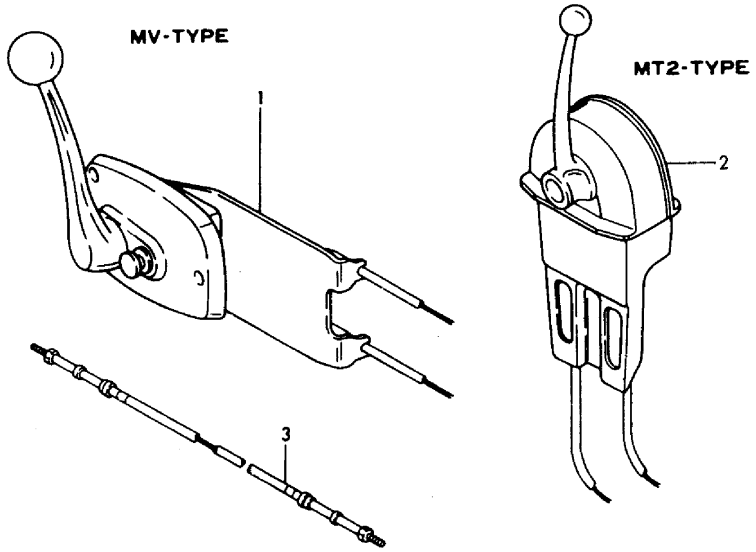

(A)=3GM30 (B)=3GM30VE (C)=3GM30B (D)=3GM30C (E)=3GM30F (F)=3GM30FVE

No.	Lev.	Parts No.	Description	Q'ty (A)	(B)	(C)	(D)	(E)	(F)	I	R
1	1	128170-86500	CONTROLLER	1	1	1	1	1	1		
2	1	196311-34250	STAND, CONTROLLER	1		1	1	1			
2-1	1	41730-000680	HEAD, REMOTE-CONTROL	1	1	1	1	1	1	S	
	(A=EXXX)		(C=EXXX) (D=EXXX)			(E=EXXX)					
3	1	41710-000380	CABLE L=4000	2	2	2	2	2	2		

N:Old $\frac{\text{Yes}}{\text{No}}$ New, Q:Old $\frac{\text{No}}{\text{Yes}}$ New, R:Old $\frac{\text{Yes}}{\text{Yes}}$ New, S:Old $\frac{\text{No}}{\text{No}}$ New, W:Add, Z:Discontinued, F:Interchangeable by set, K:Q'ty Change

Copyright (C) YANMAR CO., LTD. All RightsReserved.

Fig.84. PANEL(B-TYPE)(OPTIONAL)

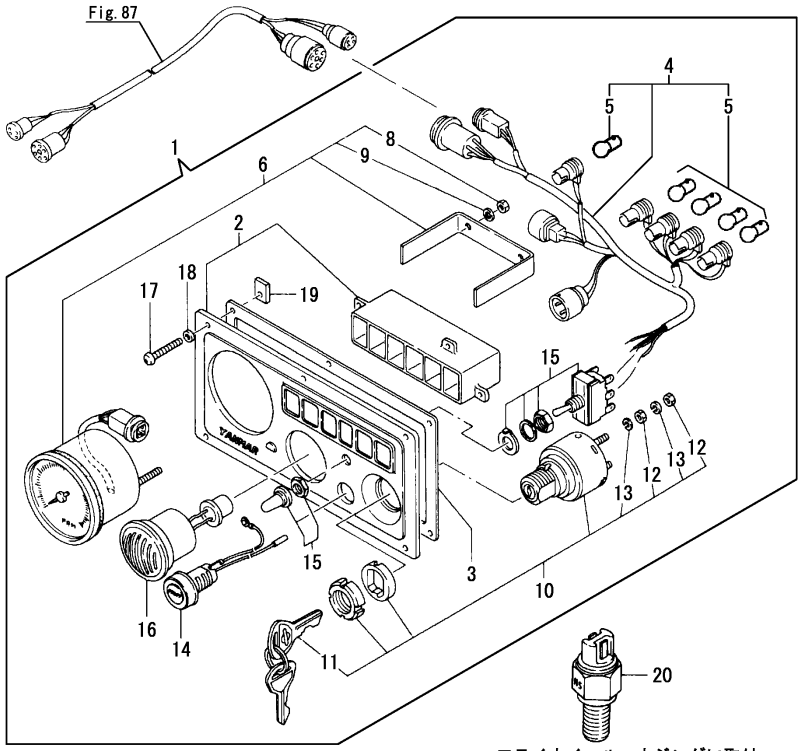

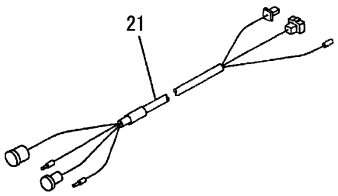

(A)=3GM30 (B)=3GM30VE (C)=3GM30B (D)=3GM30C (E)=3GM30F (F)=3GM30FVE

No.	Lev.	Parts No.	Description	Q'ty (A)	(B)	(C)	(D)	(E)	(F)	I	R
1	1	128170-91001	PANEL, INSTRUMENT	1	1	1	1	1	1		
2	2	128170-91010	BODY, PANEL	1	1	1	1	1	1		
3	2	128170-91020	GASKET	1	1	1	1	1	1		
4	2	128170-91031	HARNESS, WIRE	1	1	1	1	1	1		
5	3	46150-001110	BULB(12V3W/G11.BA9S)	5	5	5	5	5	5		
6	2	128170-91100	TACHOMETER	1	1	1	1	1	1		
8	3	26716-050002	NUT, M5	2	2	2	2	2	2		
9	3	22217-050000	WASHER, SPRING 5	2	2	2	2	2	2		
10	2	124070-91250	SWITCH, KEY	1	1	1	1	1	1		
11	3	124070-91290	KEY, SWITCH	1	1	1	1	1	1		
12	3	26716-050002	NUT, M5	4	4	4	4	4	4		
13	3	22217-050000	WASHER, SPRING 5	4	4	4	4	4	4		
14	2	124070-91300	SWITCH	1	1	1	1	1	1		
15	2	128170-91310	SWITCH	1	1	1	1	1	1		
16	2	104271-91351	BUZZER	1	1	1	1	1	1		
17	2	128170-91810	SCREW, M5X35	6	6	6	6	6	6		
18	2	128170-91820	WASHER, 5	6	6	6	6	6	6		
19	2	128170-91830	NUT, M5	6	6	6	6	6	6		
20	1	128170-91160	SENSOR	1	1	1	1	1	1		
21	1	128391-77860	HARNESS ASSY, WIRE	1	1	1	1	1	1	W	
	(A=E14020)		(C=E00396) (D=E01583)	(E=E14015)							

N:Old ←Yes/No→ New, Q:Old ←No/Yes→ New, R:Old ←Yes/Yes→ New, S:Old ←No/No→ New, W:Add, Z:Discontinued, F:Interchangeable by set, K:Q'ty Change

Copyright (C) YANMAR CO., LTD. All RightsReserved.

Fig.85. PANEL(B-TYPE)(NEW)(OPTIONAL)

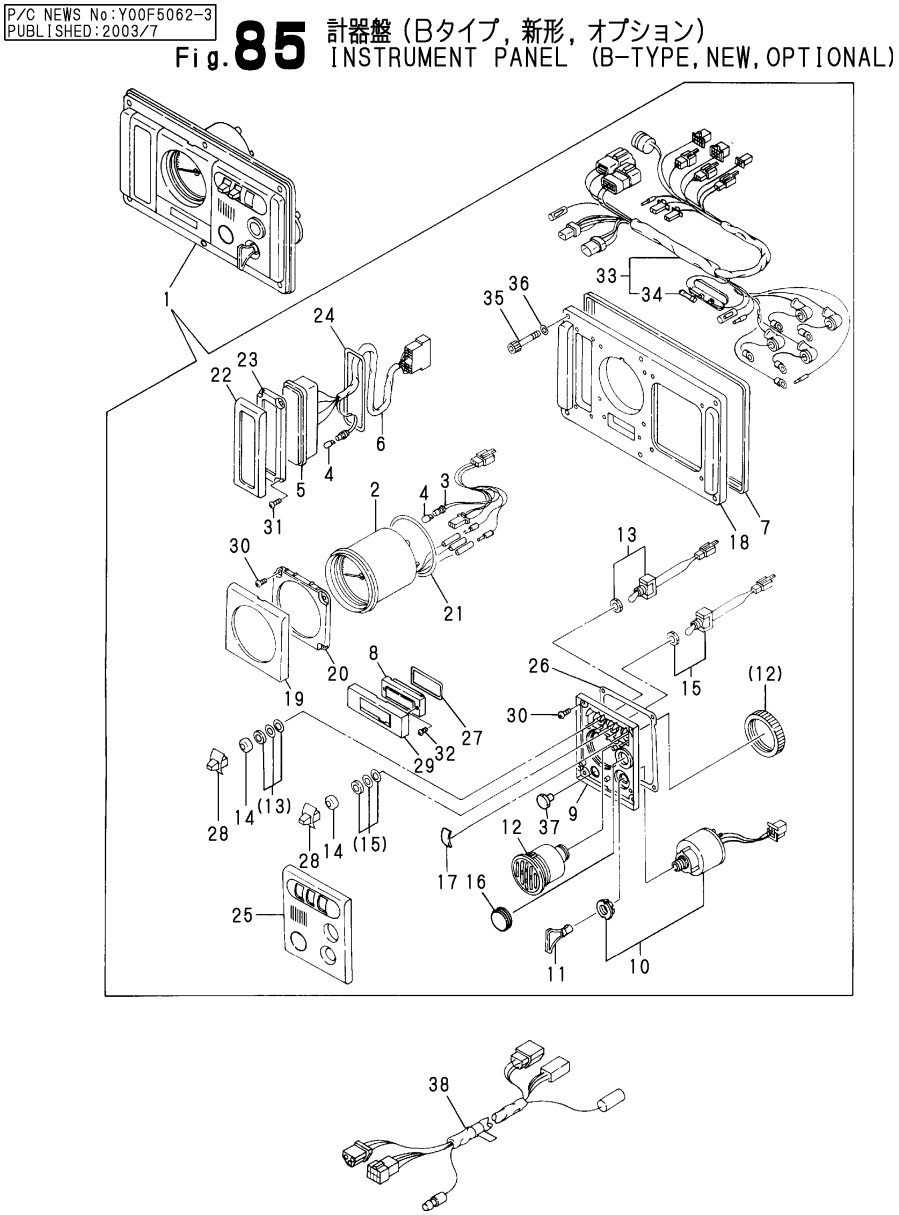

(A)=3GM30
(B)=3GM30VE
(C)=3GM30B
(D)=3GM30C
(E)=3GM30F
(F)=3GM30FVE

No.	Lev.	Parts No.	Description	Q'ty (A)	(B)	(C)	(D)	(E)	(F)	I	R
1	1	128391-91130	PANEL ASSY, INSTRUM			1					1
2	2	128391-91200	METER KIT			1					
3	2	129574-91870	HARNESS, WIRE			1					
4	2	124617-91980	BULB, 12V-1.7W			6					
5	2	119183-91860	WIRE			1					M
5-1	2	128391-91260	BOX			1					
6	2	128391-91860	WIRE			1					
7	2	128391-91700	GASKET			1					
8	2	129170-91650	COVER			1					
9	2	129574-91410	BRACKET, SWITCH			1					
10	2	121575-91250	SWITCH, KEY			1					
11	2	123482-91291	SWITCH, KEY			1					
12	2	104271-91352	BUZZER			1					
13	2	129170-91800	SWITCH			1					
14	2	129574-91780	CAP, RUBBER			2					
15	2	129574-91790	SWITCH			1					
16	2	120324-91690	COVER			1					
17	2	129170-91810	COVER			1					
18	2	128391-91930	PANEL			1					
19	2	129574-91620	BEZEL			1					
20	2	129574-91420	BRACKET			1					
21	2	129574-91720	GASKET			1					
22	2	128391-91640	BEZEL			1					
23	2	128391-91440	PLATE			1					
24	2	128391-91740	GASKET			1					
25	2	120324-91610	BEZEL			1					
26	2	129574-91710	GASKET			1					
27	2	129574-91750	GASKET			1					
28	2	129574-91770	KNOB			2					
29	2	129574-91650	BEZEL			1					
30	2	127692-91410	SCREW			8					
31	2	127692-91440	SCREW			4					
32	2	127692-91450	SCREW			2					
33	2	128391-91850	HARNESS, WIRE			1					
34	3	124617-91990	FUSE			1					
35	2	127687-91870	BOLT, M6X35			6					
36	2	127687-91880	WASHER			6					
37	2	129574-91760	COVER (C=*1994.01)			1				W	
38	1	128391-77700	HARNESS, WIRE			1					

Remarks
(1)FOR 3GM30B TYPE NEW PANEL
(E/#00396)
(M)MISPRINT:REFER TO THE NEXT ITEM.

N:Old ←Yes/No→ New, Q:Old ←No/Yes→ New, R:Old ←Yes/Yes→ New, S:Old ←No/No→ New, W:Add, Z:Discontinued, F:Interchangeable by set, K:Q'ty Change

Copyright (C) YANMAR CO., LTD. All RightsReserved.

Fig.86. PANEL(A-TYPE)(OPTIONAL)

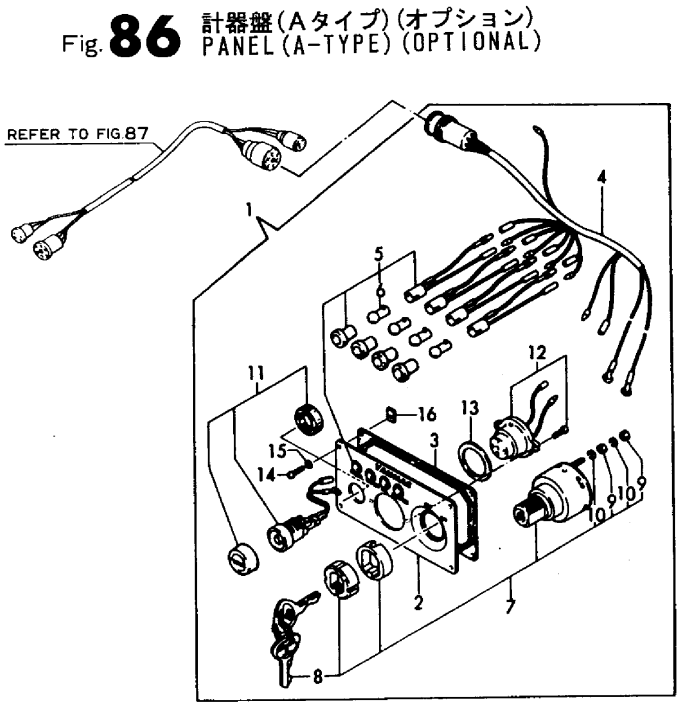

(A)=3GM30 (B)=3GM30VE (C)=3GM30B (D)=3GM30C (E)=3GM30F (F)=3GM30FVE

No.	Lev.	Parts No.	Description	Q'ty (A)	(B)	(C)	(D)	(E)	(F)	I	R
1	1	128371-91000	PANEL ASSY				1				
2	2	128270-91010	BODY, PANEL				1				
3	2	128270-91020	GASKET				1				
4	2	128371-91030	HARNESS, WIRE				1				
5	2	128270-91040	LAMP, PILOT				4				
6	3	46150-001110	BULB(12V3W/G11.BA9S)				4				
7	2	124070-91250	SWITCH, KEY				1				
8	3	124070-91290	KEY, SWITCH				1				
9	3	26716-050002	NUT, M5				4				
10	3	22217-050000	WASHER, SPRING 5				4				
11	2	124070-91300	SWITCH				1				
12	2	128270-91350	BUZZER, ALARM				1				
13	2	128270-91360	GASKET				1				
14	2	128170-91810	SCREW, M5X35				4				
15	2	128170-91820	WASHER, 5				4				
16	2	128170-91830	NUT, M5				4				

N:Old ←Yes/No→ New, Q:Old ←No/Yes→ New, R:Old ←Yes/Yes→ New, S:Old ←No/No→ New, W:Add, Z:Discontinued, F:Interchangeable by set, K:Q'ty Change

Copyright (C) YANMAR CO., LTD. All RightsReserved.

Fig.87. EXTENSION WIRE(OPTIONAL)

Fig. **87** エクステンションコード(オプション)
EXTENSION WIRE(OPTIONAL)

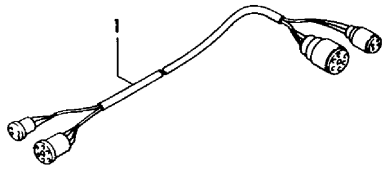

(A)=3GM30
(B)=3GM30VE
(C)=3GM30B
(D)=3GM30C
(E)=3GM30F
(F)=3GM30FVE

No.	Lev.	Parts No.	Description	Q'ty (A)	(B)	(C)	(D)	(E)	(F)	I	R
1	1	128170-77500	CORD, EXTENSION 3000	1	1	1	1	1	1		

N:Old ◄Yes/No► New, Q:Old ◄No/Yes► New, R:Old ◄Yes/Yes► New, S:Old ◄No/No► New, W:Add, Z:Discontinued, F:Interchangeable by set, K:Q'ty Change

Copyright (C) YANMAR CO., LTD. All RightsReserved.

Fig.88. SPECIAL TOOL(OPTIONAL)

Fig. 88 特殊工具(オプション) SPECIAL TOOL(OPTIONAL)

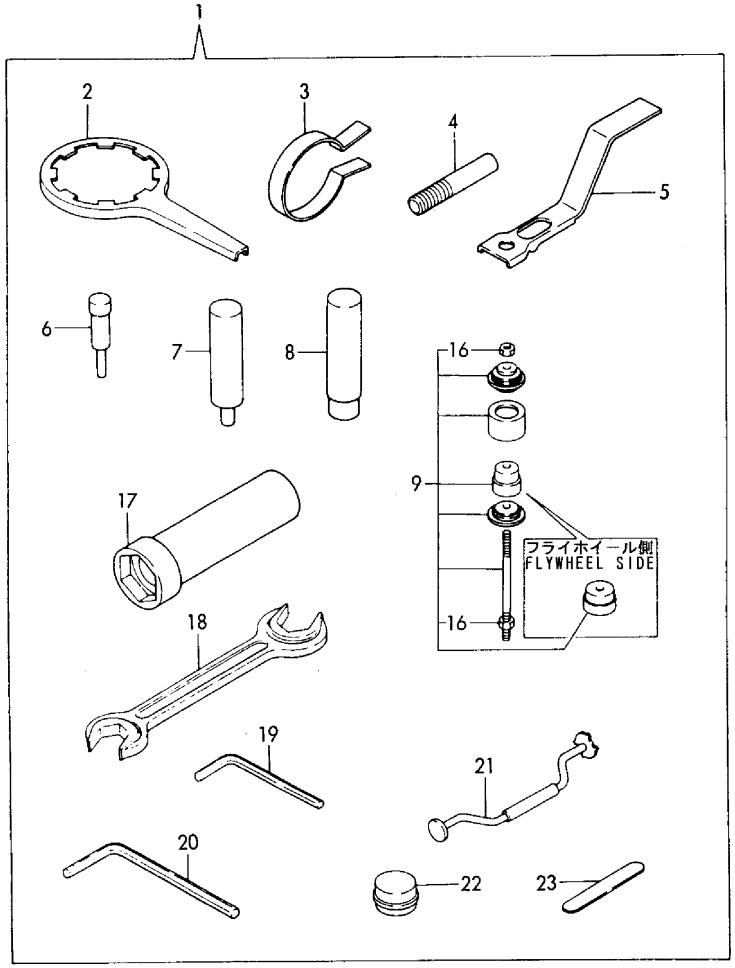

(A)=3GM30 (B)=3GM30VE (C)=3GM30B (D)=3GM30C (E)=3GM30F (F)=3GM30FVE

No.	Lev.	Parts No.	Description	Q'ty (A)	(B)	(C)	(D)	(E)	(F)	I	R
1	1	728270-92400	TOOL ASSY, SPECIAL	1	1	1	1	1	1		
2	2	124550-35350	WRENCH, FILTER	1	1	1	1	1	1		
3	2	101200-92140	TOOL, PISTON&RING	1	1	1	1	1	1		
4	2	101104-92180	TOOL, NOZZLE REMOVER	1	1	1	1	1	1		
5	2	124085-92210	TOOL, VALVE REMOVER	1	1	1	1	1	1		
6	2	124085-92250	TOOL, VALVE GUIDE	1	1	1	1	1	1		
7	2	124085-92260	TOOL, PISTON PIN	1	1	1	1	1	1		
8	2	124085-92270	TOOL, PIN BUSH	1	1	1	1	1	1		
9	2	124085-92400	TOOL, METAL REMOVER	1	1	1	1	1	1		
16	3	26716-160002	NUT, M16	2	2	2	2	2	2		
17	2	124085-92700	WRENCH	1	1	1	1	1	1		
18	2	28110-270300	SPANNER, 27X30	1	1	1	1	1	1		
19	2	28150-040000	WRENCH, BAR 4	1	1	1	1	1	1		
20	2	28150-050000	WRENCH, BAR 5	1	1	1	1	1	1		
21	2	28210-000031	TOOL, VALVE RAPPING	1	1	1	1	1	1		
22	2	28210-000070	COMPOUND	1	1	1	1	1	1		
23	2	28312-200750	GAUGE, 0.20X75	1	1	1	1	1	1		

N:Old ◄Yes/No► New, Q:Old ◄No/Yes► New, R:Old ◄Yes/Yes► New, S:Old ◄No/No► New, W:Add, Z:Discontinued, F:Interchangeable by set, K:Q'ty Change

Copyright (C) YANMAR CO., LTD. All RightsReserved.

Fig.89. REPAIR PART(OPTIONAL)

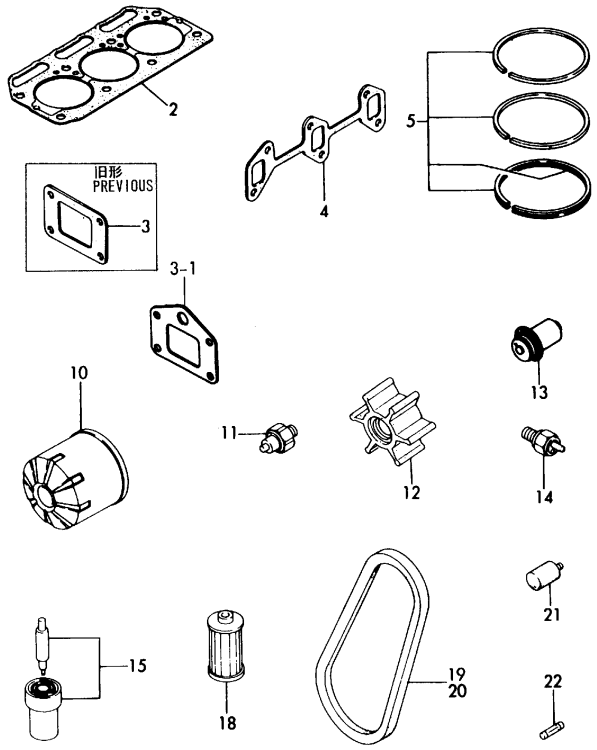

(A)=3GM30 (B)=3GM30VE (C)=3GM30B (D)=3GM30C (E)=3GM30F (F)=3GM30FVE

No.	Lev.	Parts No.	Description	Q'ty (A)	(B)	(C)	(D)	(E)	(F)	I	R
2	1	128374-01330	GASKET, HEAD	1		1	1				
2-1	1	128374-01911	GASKET, HEAD	1	1	1	1			N	
	(A=E04576)		(C=E00202) (D=E00119)								
3	1	128370-13200	GASKET	1		1	1				
3-1	1	128370-13230	GASKET	1		1	1			S	
	(A=E01538)		(C=E00133) (D=E00212)								
3-2	1	128370-13231	GASKET	1	1	1	1			N	
	(A=E05449)		(C=E00215) (D=E00123)								
4	1	121450-13250	GASKET	1		1	1				
4-1	1	121450-13251	GASKET, MANIFOLD	1	1	1	1			N	
	(A=E11532)		(C=E00343) (D=E01203)								
5	1	705311-22500	RING SET, PISTON	3	3	3	3				
10	1	124450-35100	FILTER, OIL	1		1	1				1
10-1	1	119660-35150	FILTER, LUB. OIL	1	1	1	1			N	1
	(A=E11532)		(C=E00343) (D=E01203)								
10-2	1	119305-35151	FILTER ASSY, D68XL65	1	1	1	1			N	1
	(A=EXXXXX)	(B=EXXXXX)	(C=EXXXXX) (D=EXXXXX)								
10-3	1	119305-35170	FILTER ASSY, D68XL65	1	1	1	1			R	2
11	1	124060-39451	SWITCH, 0.2KG	1	1	1	1				
12	1	104211-42070	IMPELLER	1	1	1	1				
13	1	105582-49200	THERMOSTAT	1	1	1	1				
14	1	128275-91340	SWITCH, 65	1	1	1	1				
15	1	124770-53000	VALVE ASSY,INJECTION	3	3	3	3				
18	1	104500-55710	ELEMENT	1	1	1	1				
19	1	104511-78780	V-BELT, M/19	1	1	1	1				
20	1	128670-77350	V-BELT, A31	1	1	1	1				
21	1	27210-200300	ZINC, SCREW20X30	3	3	3	3				
22	1	46150-003680	FUSE 30A	1	1	1	1				

Remarks
(1)Non-branded filter(without Yanmar logo).
(2)Branded filter(with Yanmar logo).

N:Old $\xleftrightarrow[\text{No}]{\text{Yes}}$ New, Q:Old $\xleftrightarrow[\text{Yes}]{\text{No}}$ New, R:Old $\xleftrightarrow[\text{Yes}]{\text{Yes}}$ New, S:Old $\xleftrightarrow[\text{No}]{\text{No}}$ New, W:Add, Z:Discontinued, F:Interchangeable by set, K:Q'ty Change

Copyright (C) YANMAR CO., LTD. All RightsReserved.

Fig.90. REPAIR PART(OPTIONAL)

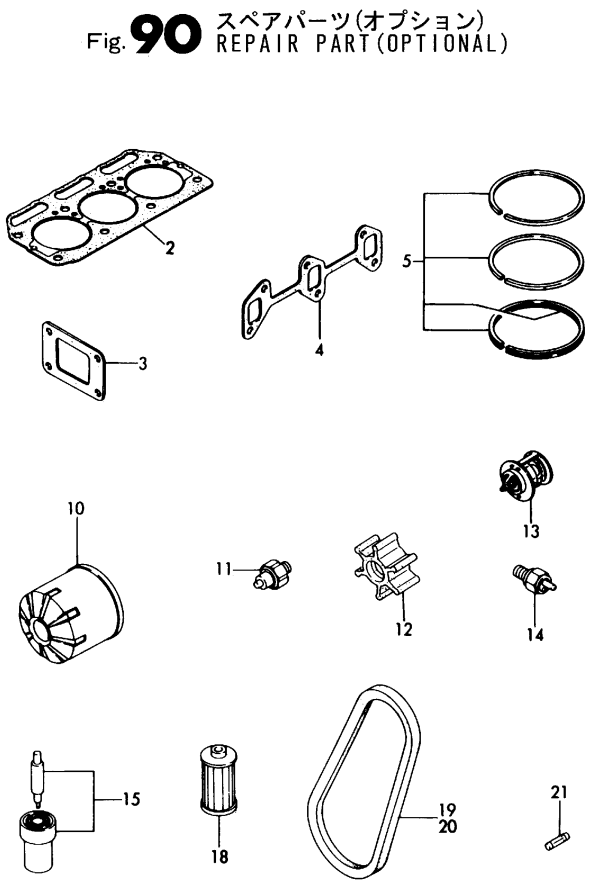

Remarks
(1)Non-branded filter(without Yanmar logo).
(2)Branded filter(with Yanmar logo).

(A)=3GM30 (B)=3GM30VE (C)=3GM30B (D)=3GM30C (E)=3GM30F (F)=3GM30FVE

No.	Lev.	Parts No.	Description	Q'ty (A)	(B)	(C)	(D)	(E)	(F)	I	R
2	1	128374-01330	GASKET, HEAD					1			
2-1	1	128374-01911	GASKET, HEAD					1	1	N	
				(E=E04594)							
3	1	128370-13200	GASKET					1			
3-1	1	128370-13201	GASKET					1	1	N	
				(E=E11515)							
4	1	121450-13250	GASKET					1			
4-1	1	121450-13251	GASKET, MANIFOLD					1	1	N	
				(E=E11515)							
5	1	705311-22500	RING SET, PISTON					3	3		
10	1	124450-35100	FILTER, OIL					1			1
10-1	1	119660-35150	FILTER, LUB. OIL					1	1	R	1
				(E=E11515)							
10-2	1	119305-35151	FILTER ASSY, D68XL65					1	1	N	1
				(E=EXXXXX)				(F=EXXXXX)			
10-3	1	119305-35170	FILTER ASSY, D68XL65					1	1	R	2
11	1	124060-39451	SWITCH, 0.2KG					1	1		
12	1	124223-42091	IMPELLER					1	1		
13	1	121750-49800	THERMOSTAT					1	1		
14	1	127610-91350	SWITCH, 95					1	1		
15	1	124770-53000	VALVE ASSY,INJECTION					3	3		
18	1	104500-55710	ELEMENT					1	1		
19	1	104511-78780	V-BELT, M/19					1	1		
20	1	124732-42290	V-BELT, AX37					1	1		
21	1	46150-003680	FUSE 30A					1	1		

N:Old ←Yes/No→ New, Q:Old ←No/Yes→ New, R:Old ←Yes/Yes→ New, S:Old ←No/No→ New, W:Add, Z:Discontinued, F:Interchangeable by set, K:Q'ty Change

Copyright (C) YANMAR CO., LTD. All RightsReserved.

Fig.91. GASKET SET(OPTIONAL)

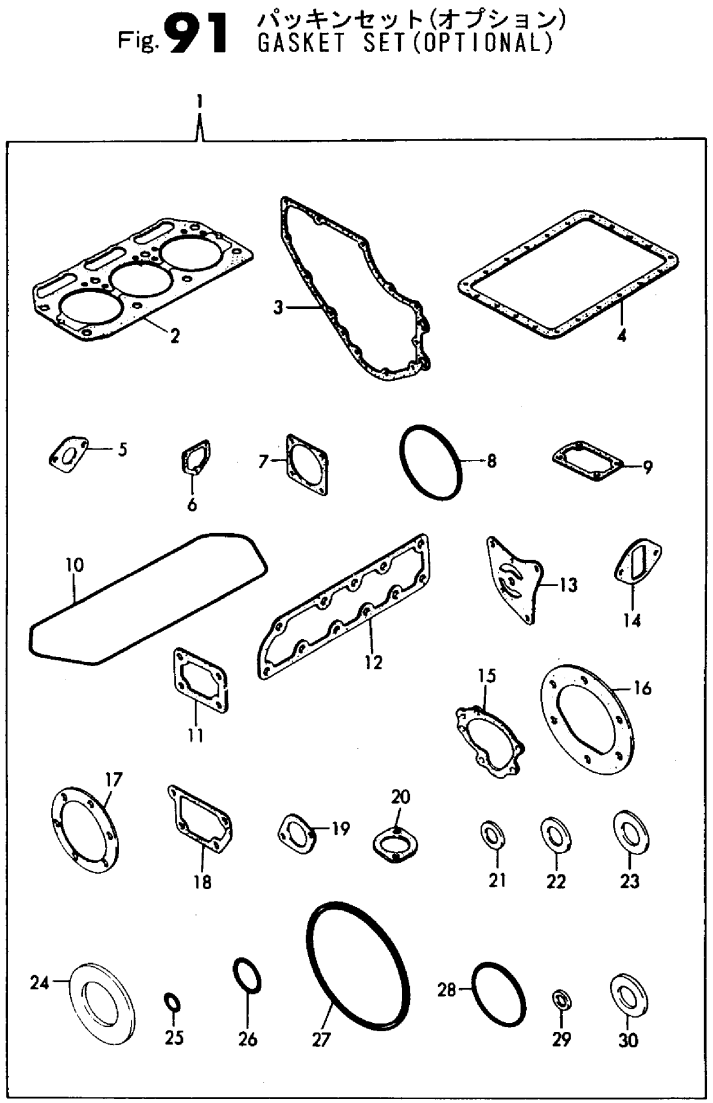

(A)=3GM30 (B)=3GM30VE (C)=3GM30B (D)=3GM30C (E)=3GM30F (F)=3GM30FVE

No.	Lev.	Parts No.	Description	Q'ty (A)	(B)	(C)	(D)	(E)	(F)	I	R
1	1	728374-92600	GASKET SET	1	1	1	1	1	1		
2	2	128374-01330	GASKET, HEAD	1		1	1	1			
2-1	2	128374-01911	GASKET, HEAD	1	1	1	1	1	1	N	
	(A=E04576)		(C=E00202) (D=E00119)	(E=E04594)							
3	2	121575-01510	GASKET, GEAR CASE	1		1	1	1			
3-1	2	121575-01511	GASKET, GEAR CASE	1	1	1	1	1	1	N	
	(A=E11532)		(C=E00343) (D=E01203)	(E=E11515)							
4	2	121450-01751	GASKET, OIL SUMP	1	1	1	1	1	1		
5	2	121520-01850	GASKET	1		1	1	1			
5-1	2	121520-01851	GASKET	1	1	1	1	1	1	N	
	(A=E10103)		(C=E00309) (D=E01060)	(E=E10104)							
6	2	121575-01860	GASKET	1		1	1	1			
6-1	2	121575-01861	GASKET	1	1	1	1	1	1	N	
	(A=E11532)		(C=E00343) (D=E01203)	(E=E11515)							
7	2	124240-01882	GASKET	1		1	1	1			
7-1	2	124240-01883	GASKET	1	1	1	1	1	1	N	
	(A=E10103)		(C=E00309) (D=E01060)	(E=E10104)							
7-2	2	129C26-01890	GASKET, HO-P	1	1	1	1	1	1	R	
	(A=EXXXXX)	(B=EXXXXX)	(C=EXXXXX) (D=EXXXXX)	(E=EXXXXX)				(F=EXXXXX)			
8	2	105225-02020	O-RING	1	1	1	1	1	1		
9	2	121000-03070	GASKET	1	1	1	1	1	1		
10	2	121450-11310	GASKET, BONNET	1	1	1	1	1	1		
11	2	121450-11680	GASKET	1		1	1	1			
11-1	2	121450-11681	GASKET	1	1	1	1	1	1	N	
	(A=E11532)		(C=E00343) (D=E01203)	(E=E11515)							
12	2	128370-13180	GASKET	1		1	1	1			
12-1	2	128370-13181	GASKET	1	1	1	1	1	1	N	
	(A=E11532)		(C=E00343) (D=E01203)	(E=E11515)							
13	2	121450-32021	GASKET, PUMP	1	1	1	1	1	1		
14	2	124160-34844	GASKET	1		1	1	1			
14-1	2	124160-34845	GASKET	1	1	1	1	1	1	N	
	(A=E11532)		(C=E00343) (D=E01203)	(E=E11515)							
15	2	121000-42051	GASKET, WATER PUMP	1	1	1	1	1	1		
16	2	104211-42090	GASKET	1	1	1	1	1	1		
17	2	124223-42110	GASKET, WATER PUMP	1	1	1	1	1	1		
18	2	121450-44410	GASKET	1	1	1	1	1	1		
19	2	104211-49160	GASKET	1	1	1	1	1	1		
20	2	129350-49540	GASKET	1		1	1	1			
20-1	2	124736-49540	GASKET	1	1	1	1	1	1	S	
	(A=EXXX)		(C=EXXX) (D=EXXX)	(E=EXXX)							
21	2	23414-080000	GASKET, 8X1.0	20	20	20	20	20	20		
22	2	23414-100000	GASKET, 10X1.0	5	5	5	5	5	5		
23	2	23414-120000	GASKET, 12X1.0	20	20	20	20	20	20		
24	2	23414-250000	GASKET, 25X1.0	5	5	5	5	5	5		
25	2	24311-000100	O-RING, 1AP10.0	2	2	2	2	2	2		
26	2	24311-000160	O-RING, 1AP16.0	1	1	1	1	1	1		
27	2	24311-000700	O-RING, 1AP70.0	2	2	2	2	2	2		
28	2	24321-000350	O-RING, 1AG35.0	1	1	1	1	1	1		
29	2	43400-500390	SEAL WASHER 6S	2	2	2	2	2	2		
30	2	43400-500450	SEAL WASHER 12S	2	2	2	2	2	2		

N:Old $\xleftrightarrow[\text{No}]{\text{Yes}}$ New, Q:Old $\xleftrightarrow[\text{Yes}]{\text{No}}$ New, R:Old $\xleftrightarrow[\text{Yes}]{\text{Yes}}$ New, S:Old $\xleftrightarrow[\text{No}]{\text{No}}$ New, W:Add, Z:Discontinued, F:Interchangeable by set, K:Q'ty Change

Copyright (C) YANMAR CO., LTD. All RightsReserved.

Fig.92. CLUTCH HOUSING

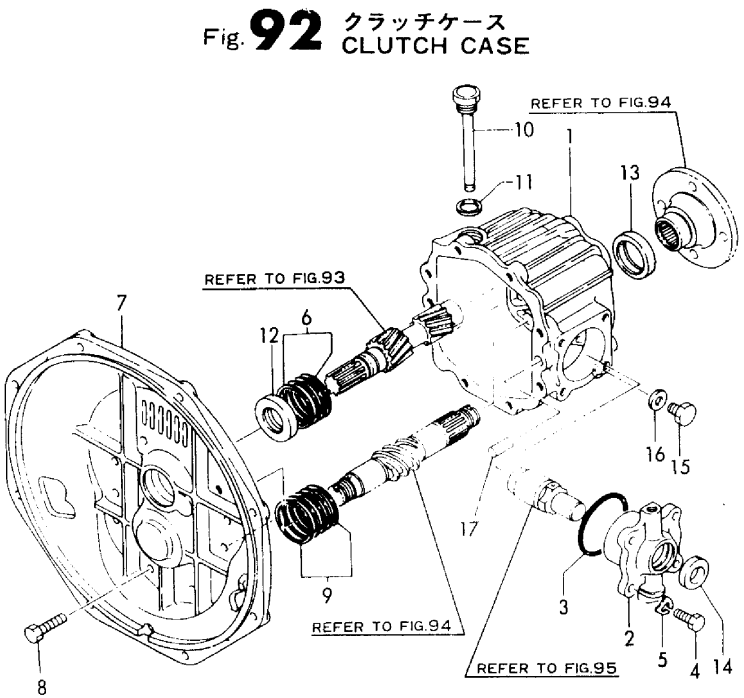

(A)=KM3-A (D)=
(B)= (E)=
(C)= (F)=

No.	Lev.	Parts No.	Description	Q'ty (A)	(B)	(C)	(D)	(E)	(F)	I	R
1	1	177070-02011	HOUSING, CLUTCH	1							
2	1	177088-02091	COVER	1							
3	1	24341-000600	O-RING, 1AS60.0	1							
4	1	26116-080202	BOLT, M8X 20 PLATED	4							
5	1	22287-080000	WASHER, 8	4							
6	1	177088-02350	SHIM SET	1							
7	1	177070-02031	FLANGE, CLUTCH	1							
8	1	26116-080252	BOLT, M8X 25 PLATED	8							
9	1	177090-02250	SHIM	1							
10	1	177088-02450	DIPSTICK	1							
11	1	23414-160021	GASKET, 16X1.0	1							
12	1	177088-02950	SEAL SC25 40 8, OIL	1							
13	1	177088-02961	SEAL MHSA34 44 8,OIL	1							
14	1	177088-02970	SEAL, OIL	1							
15	1	23883-100002	PLUG, 10	1							
16	1	23414-100000	GASKET, 10X1.0	1							
17	1	22312-100160	PIN, PARALLEL M10X16	2							

N:Old $\overset{\text{Yes}}{\underset{\text{No}}{\leftrightarrow}}$ New, Q:Old $\overset{\text{No}}{\underset{\text{Yes}}{\leftrightarrow}}$ New, R:Old $\overset{\text{Yes}}{\underset{\text{Yes}}{\leftrightarrow}}$ New, S:Old $\overset{\text{No}}{\underset{\text{No}}{\leftrightarrow}}$ New, W:Add, Z:Discontinued, F:Interchangeable by set, K:Q'ty Change

Copyright (C) YANMAR CO., LTD. All RightsReserved.

Fig.93. INPUT SHAFT & SUPPORT SHAFT

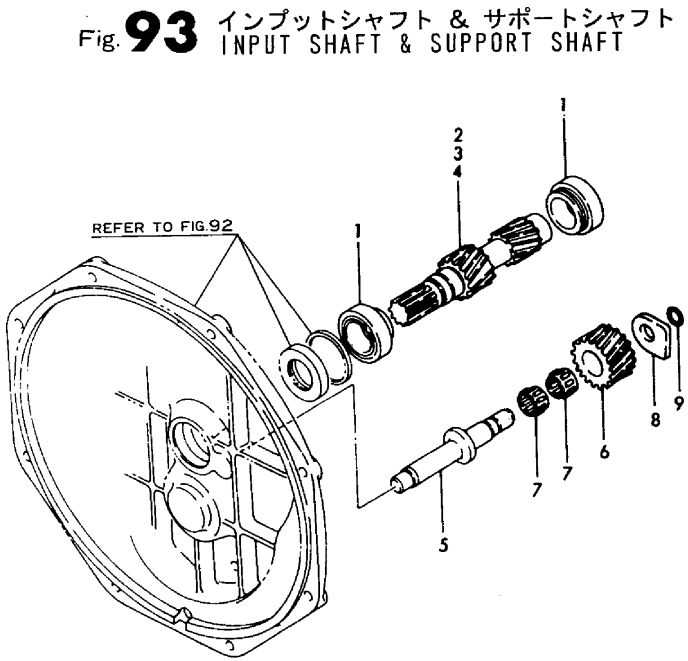

(A)=KM3-A (D)=
(B)= (E)=
(C)= (F)=

No.	Lev.	Parts No.	Description	Q'ty (A)	(B)	(C)	(D)	(E)	(F)	I	R
1	1	177088-03400	ROLLER BERING	2							
2	1	177070-03030	SHAFT, INPUT	1							
3	1	177070-03010	SHAFT, INPUT	1							
4	1	177070-03020	SHAFT, INPUT	1							
5	1	177070-03301	SHAFT, IDLE	1							
6	1	177088-03311	GEAR, IDLE Z=26	1							
7	1	177088-03331	NEEDLE BERG.#K162213	2							
8	1	177088-03341	WASHER, THRUST	1							
9	1	24341-000120	O-RING, 1AS12.0	1							

N:Old $\xleftarrow[\text{No}]{\text{Yes}}$ New, Q:Old $\xleftarrow[\text{Yes}]{\text{No}}$ New, R:Old $\xleftarrow[\text{Yes}]{\text{Yes}}$ New, S:Old $\xleftarrow[\text{No}]{\text{No}}$ New, W:Add, Z:Discontinued, F:Interchangeable by set, K:Q'ty Change

Copyright (C) YANMAR CO., LTD. All RightsReserved.

Fig.94. OUTPUT SHAFT

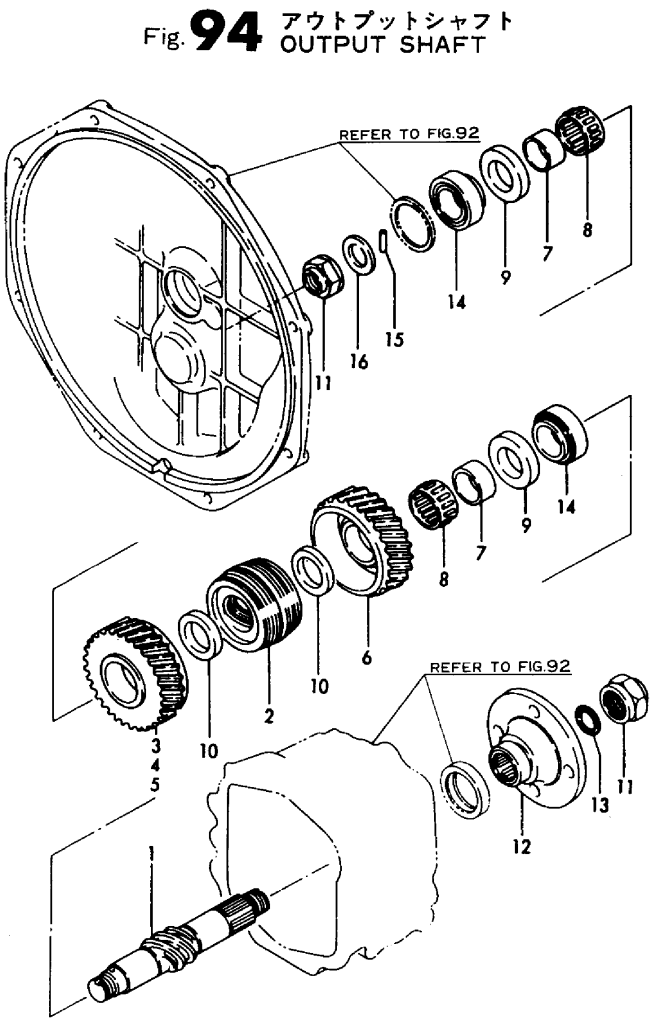

(A)=KM3-A (D)=
(B)= (E)=
(C)= (F)=

No.	Lev.	Parts No.	Description	Q'ty (A)	(B)	(C)	(D)	(E)	(F)	I	R
1	1	177070-03040	SHAFT, OUTPUT	1							
2	1	177070-03070	CONE, DRIVE	1							
3	1	177070-03130	GEAR, FORWARD Z=59	1							
4	1	177070-03111	GEAR, Z=60	1							
5	1	177070-03121	GEAR, FORWARD Z=64	1							
6	1	177070-03111	GEAR, Z=60	1							
7	1	177070-03190	RACE, BEARING	2							
8	1	177070-03200	NEEDLE BEARING	2							
9	1	177070-03230	COLLAR, THRUST	2							
10	1	177070-03250	COLLAR, THRUST	2							
11	1	177088-03272	NUT	2							
12	1	177070-03550	COUPLING	1							
13	1	24311-000210	O-RING, 1AP21.0	1							
14	1	24141-302050	BEARING, 30205	2							
15	1	177088-03290	PIN	1							
16	1	177088-03280	COLLAR, 32D-45T	1							

N:Old ◄Yes/No► New, Q:Old ◄No/Yes► New, R:Old ◄Yes/Yes► New, S:Old ◄No/No► New, W:Add, Z:Discontinued, F:Interchangeable by set, K:Q'ty Change

Copyright (C) YANMAR CO., LTD. All RightsReserved.

Fig.95. REMOTE CONTROL DEVICE

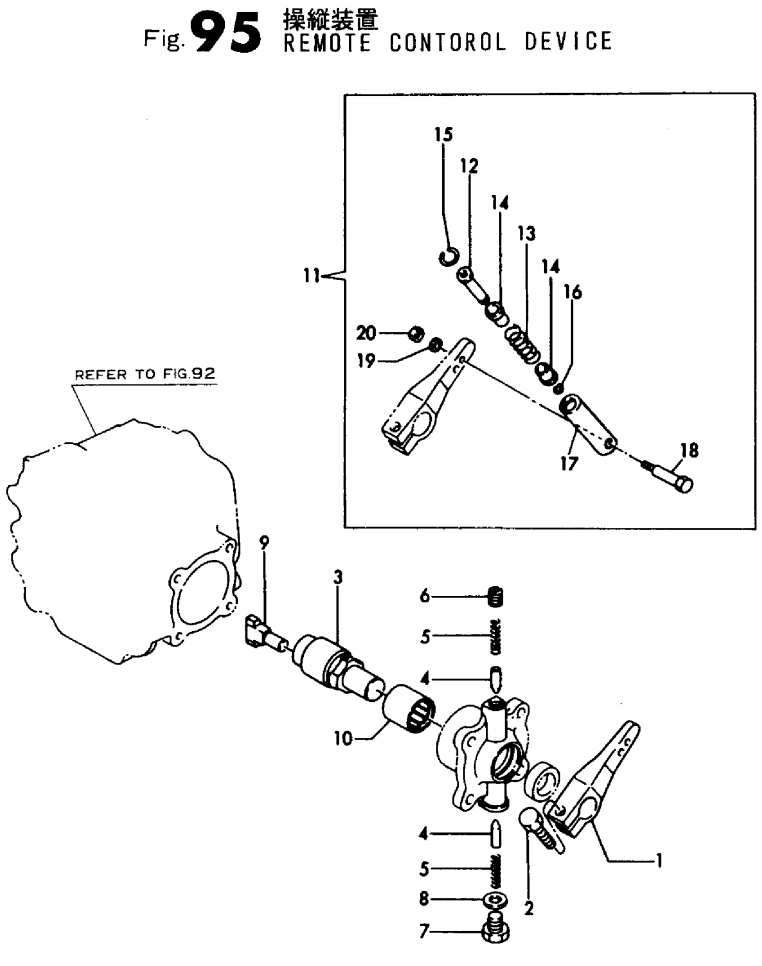

(A)=KM3-A (D)=
(B)= (E)=
(C)= (F)=

No.	Lev.	Parts No.	Description	Q'ty (A)	(B)	(C)	(D)	(E)	(F)	I	R
1	1	177095-06040	LEVER	1							
2	1	26106-080252	BOLT, M8X 25 PLATED	1							
3	1	177088-06010	SHAFT	1							
4	1	177095-03190	PIN	2							
5	1	177088-06020	SPRING	2							
6	1	26911-100102	SCREW, M10X10	1							
7	1	23883-100002	PLUG, 10	1							
8	1	23414-100000	GASKET, 10X1.0	1							
9	1	177088-06050	SHIFTER	1							
10	1	177088-06070	NEEDLE BERG. #HK3026	1							
11	1	177088-06090	CONNECTOR ASSY	1							
12	2	177088-06120	CONNECTOR	1							
13	2	177088-06170	SPRING	1							
14	2	177088-06140	RETAINER, SPRING	2							
15	2	177088-06150	CIRCLIP	1							
16	2	177088-06160	CIRCLIP	1							
17	2	177088-06110	HOLDER	1							
18	2	177088-06100	CONNECTOR	1							
19	2	22117-060000	WASHER, 6	1							
20	2	26716-060002	NUT, M6	1							

N:Old $\xleftrightarrow[\text{No}]{\text{Yes}}$ New, Q:Old $\xleftrightarrow[\text{Yes}]{\text{No}}$ New, R:Old $\xleftrightarrow[\text{Yes}]{\text{Yes}}$ New, S:Old $\xleftrightarrow[\text{No}]{\text{No}}$ New, W:Add, Z:Discontinued, F:Interchangeable by set, K:Q'ty Change

Copyright (C) YANMAR CO., LTD. All RightsReserved.

Fig.96. TOOL(OPTIONAL)

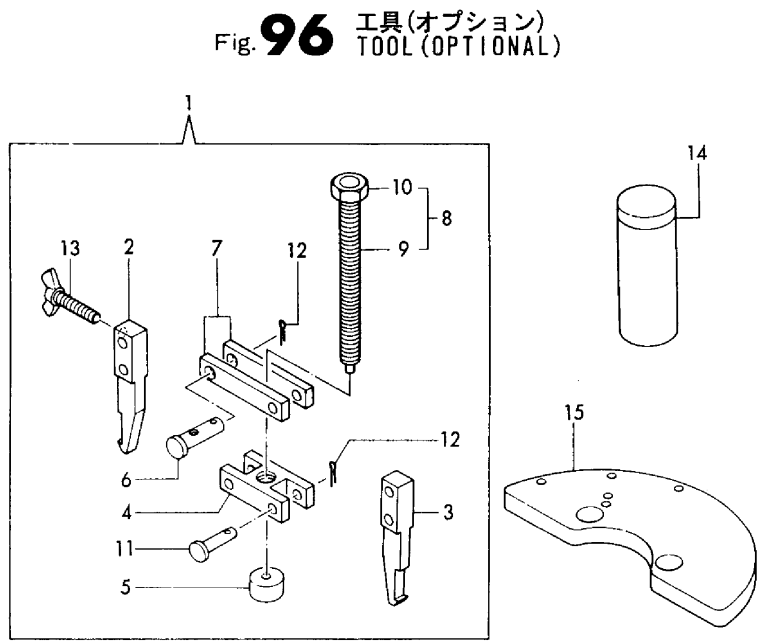

(A)=KM3-A (D)=
(B)= (E)=
(C)= (F)=

No.	Lev.	Parts No.	Description	Q'ty (A)	(B)	(C)	(D)	(E)	(F)	I	R
1	1	177088-09010	TOOL ASSY, REMOVER	1							
2	2	177088-09020	TOOL	1							
3	2	177088-09030	TOOL	1							
4	2	177088-09040	SUPPORT	1							
5	2	177088-09050	RETAINER	1							
6	2	177088-09060	PIN	1							
7	2	177088-09070	SUPPORT	2							
8	2	177088-09080	BOLT ASSY	1							
9	3	177088-09090	BOLT	1							
10	3	26736-100002	NUT, M10	1							
11	2	22487-060240	PIN, H 6X 24	3							
12	2	22414-160120	PIN, COTTER 1.6X12	4							
13	2	26646-040352	WING BOLT	1							
14	1	177088-09150	TOOL, DRIVE	1							
15	1	177088-09160	JIG, LEVER LOCATING	1							

N:Old $\overset{\text{Yes}}{\underset{\text{No}}{\leftrightarrows}}$ New, Q:Old $\overset{\text{No}}{\underset{\text{Yes}}{\leftrightarrows}}$ New, R:Old $\overset{\text{Yes}}{\underset{\text{Yes}}{\leftrightarrows}}$ New, S:Old $\overset{\text{No}}{\underset{\text{No}}{\leftrightarrows}}$ New, W:Add, Z:Discontinued, F:Interchangeable by set, K:Q'ty Change

Copyright (C) YANMAR CO., LTD. All RightsReserved.

Fig.97. CLUTCH HOUSING

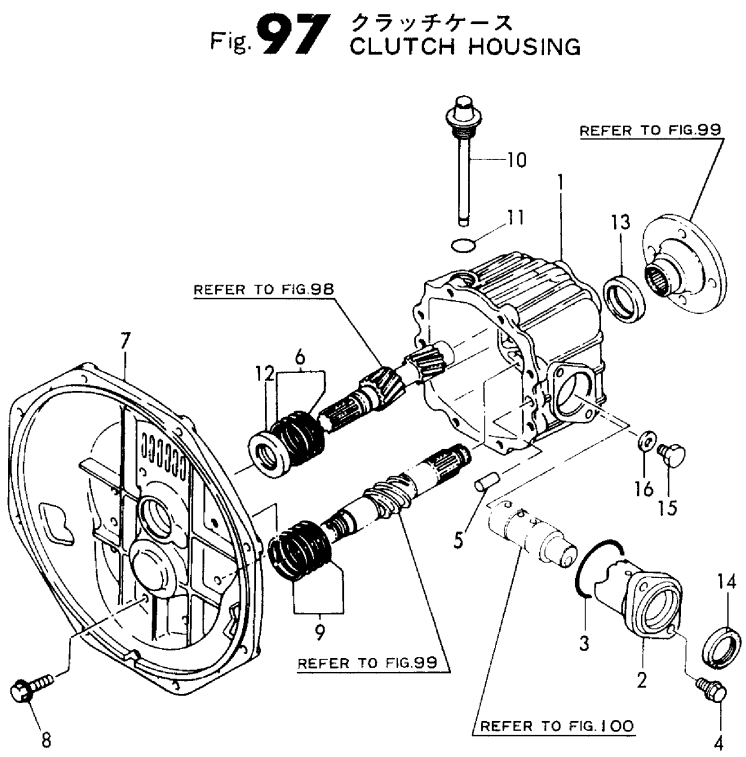

(A)=KM3P (D)=
(B)= (E)=
(C)= (F)=

No.	Lev.	Parts No.	Description	Q'ty (A)	(B)	(C)	(D)	(E)	(F)	I	R
1	1	177070-02012	HOUSING, CLUTCH	1							
2	1	177088-02120	COVER	1							
3	1	24321-000400	O-RING, 1AG40.0	1							
4	1	26013-080252	BOLT, SPRING M8X 25	2							
5	1	22312-100160	PIN, PARALLEL M10X16	2							
6	1	177088-02350	SHIM SET	1							
7	1	177070-02031	FLANGE, CLUTCH	1							
8	1	26106-080252	BOLT, M8X 25 PLATED	8							
9	1	177088-02300	SHIM SET	1							
10	1	177088-02451	DIPSTICK	1							
11	1	24311-000180	O-RING, 1AP18.0	1							
12	1	177088-02950	SEAL SC25 40 8, OIL	1							
13	1	177088-02961	SEAL MHSA34 44 8,OIL	1							
14	1	24421-284008	SEAL, OIL TC284008	1							
15	1	23887-100002	PLUG, 10	1							
16	1	23414-100000	GASKET, 10X1.0	1							

N:Old ◄Yes/No► New, Q:Old ◄No/Yes► New, R:Old ◄Yes/Yes► New, S:Old ◄No/No► New, W:Add, Z:Discontinued, F:Interchangeable by set, K:Q'ty Change

Copyright (C) YANMAR CO., LTD. All RightsReserved.

Fig.98. INPUT SHAFT & SUPPORT SHAFT

Fig. 98 インプットシャフト & サポートシャフト
INPUT SHAFT & SUPPORT SHAFT

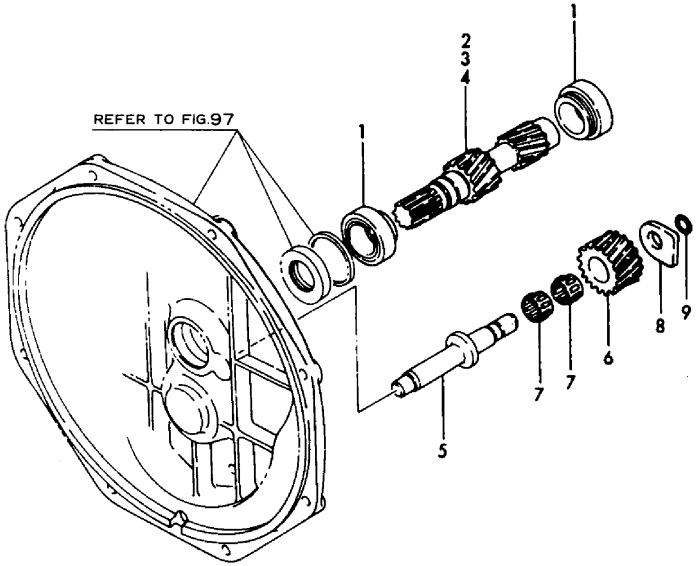

(A)=KM3P (D)=
(B)= (E)=
(C)= (F)=

No.	Lev.	Parts No.	Description	Q'ty (A)	(B)	(C)	(D)	(E)	(F)	I	R
1	1	177088-03400	ROLLER BERING	2							
2	1	177070-03031	SHAFT, INPUT I=2.36	1							
3	1	177070-03011	SHAFT, INPUT I=2.61	1							
4	1	177070-03021	SHAFT, INPUT I=3.20	1							
5	1	177070-03302	SHAFT, IDLE	1							
6	1	177088-03311	GEAR, IDLE Z=26	1							
7	1	177088-03331	NEEDLE BERG.#K162213	2							
8	1	177088-03341	WASHER, THRUST	1							
9	1	24341-000120	O-RING, 1AS12.0	1							

N:Old $\xleftrightarrow[\text{No}]{\text{Yes}}$ New, Q:Old $\xleftrightarrow[\text{Yes}]{\text{No}}$ New, R:Old $\xleftrightarrow[\text{Yes}]{\text{Yes}}$ New, S:Old $\xleftrightarrow[\text{No}]{\text{No}}$ New, W:Add, Z:Discontinued, F:Interchangeable by set, K:Q'ty Change

Copyright (C) YANMAR CO., LTD. All RightsReserved.

Fig.99. OUTPUT SHAFT

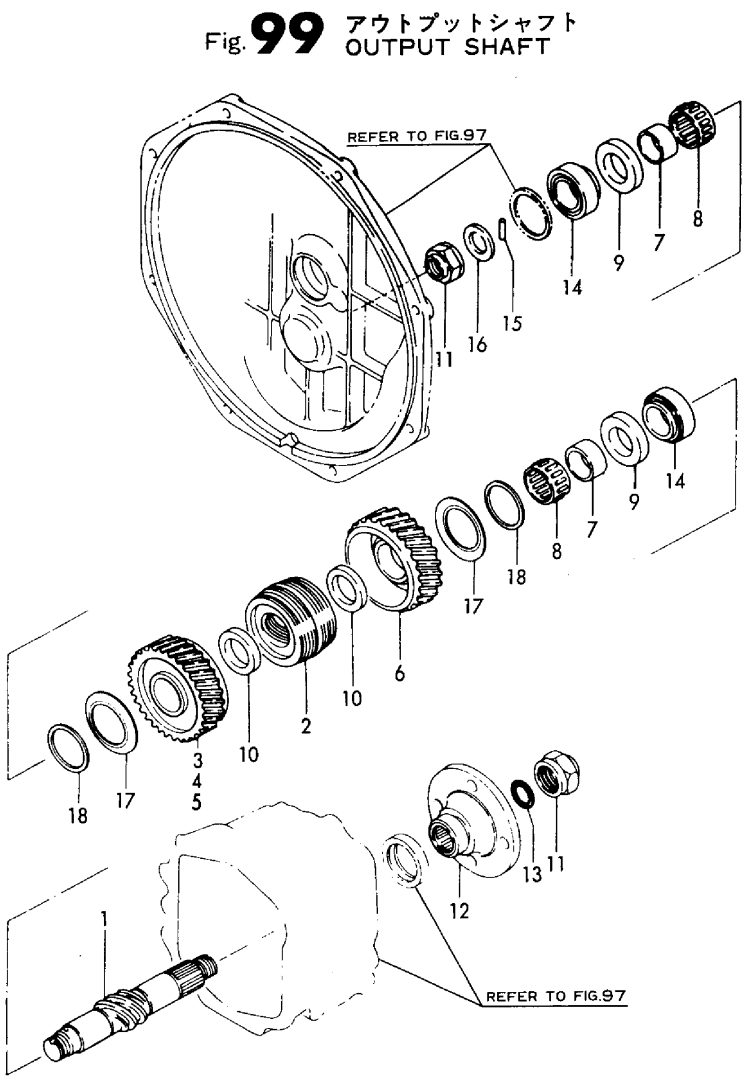

(A)=KM3P (D)=
(B)= (E)=
(C)= (F)=

No.	Lev.	Parts No.	Description	Q'ty (A)	(B)	(C)	(D)	(E)	(F)	I	R
1	1	177070-03041	SHAFT, OUTPUT	1							
2	1	177070-03071	CONE, DRIVE	1							
3	1	177070-03131	GEAR, FORWARD Z=59	1							
4	1	177070-03112	GEAR, Z=60	1							
5	1	177070-03122	GEAR, FORWARD Z=64	1							
6	1	177070-03112	GEAR, Z=60	1							
7	1	177070-03190	RACE, BEARING	2							
8	1	177070-03200	NEEDLE BEARING	2							
9	1	177070-03231	COLLAR, THRUST	2							
10	1	177070-03250	COLLAR, THRUST	2							
11	1	177088-03272	NUT	2							
12	1	177070-03550	COUPLING	1							
13	1	24311-000210	O-RING, 1AP21.0	1							
14	1	24141-302050	BEARING, 30205	2							
15	1	177088-03290	PIN	1							
16	1	177088-03280	COLLAR, 32D-45T	1							
17	1	177088-03540	SPRING	2							
18	1	177073-03340	RETAINER, SPRING	2							

N:Old $\xleftarrow[\text{No}]{\text{Yes}}$ New, Q:Old $\xleftarrow[\text{Yes}]{\text{No}}$ New, R:Old $\xleftarrow[\text{Yes}]{\text{Yes}}$ New, S:Old $\xleftarrow[\text{No}]{\text{No}}$ New, W:Add, Z:Discontinued, F:Interchangeable by set, K:Q'ty Change

Copyright (C) YANMAR CO., LTD. All RightsReserved.

Fig.100. REMOTE CONTROL DEVICE

(A)=KM3P (D)=
(B)= (E)=
(C)= (F)=

Fig. 100 操縦装置 REMOTE CONTOROL DEVICE

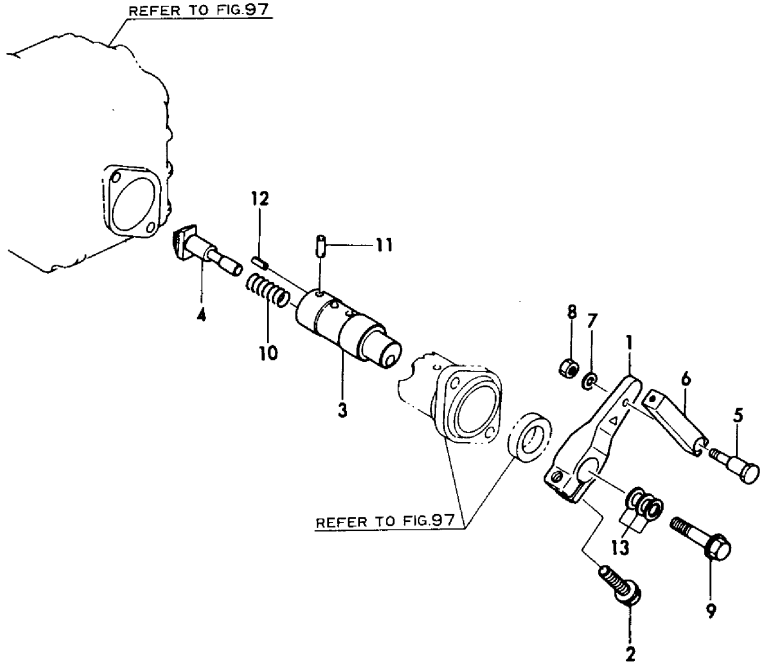

No.	Lev.	Parts No.	Description	Q'ty (A)	(B)	(C)	(D)	(E)	(F)	I	R
1	1	177088-06400	LEVER	1							
2	1	26106-080252	BOLT, M8X 25 PLATED	1							
3	1	177088-06350	SHAFT, CONTROL	1							
4	1	177088-06390	SHIFTER	1							
5	1	177088-06101	CONNECTOR	1							
6	1	177088-06410	JOINT, 10-32UNF	1							
7	1	22137-060000	WASHER, 6	1							
8	1	26716-060002	NUT, M6	1							
9	1	177088-06360	BOLT	1							
10	1	177088-06370	SPRING	1							
11	1	196322-06610	PIN, PARALLEL 5X18	1							
12	1	22351-020012	PIN, SPRING 2.0X12	1							
13	1	177088-06380	SHIM SET	1							

N:Old ◄Yes/No► New, Q:Old ◄No/Yes► New, R:Old ◄Yes/Yes► New, S:Old ◄No/No► New, W:Add, Z:Discontinued, F:Interchangeable by set, K:Q'ty Change

Copyright (C) YANMAR CO., LTD. All RightsReserved.

Fig.101. TOOL(OPTIONAL)

(A)=KM3P (D)=
(B)= (E)=
(C)= (F)=

Fig. 101 工具(オプション) TOOL(OPTIONAL)

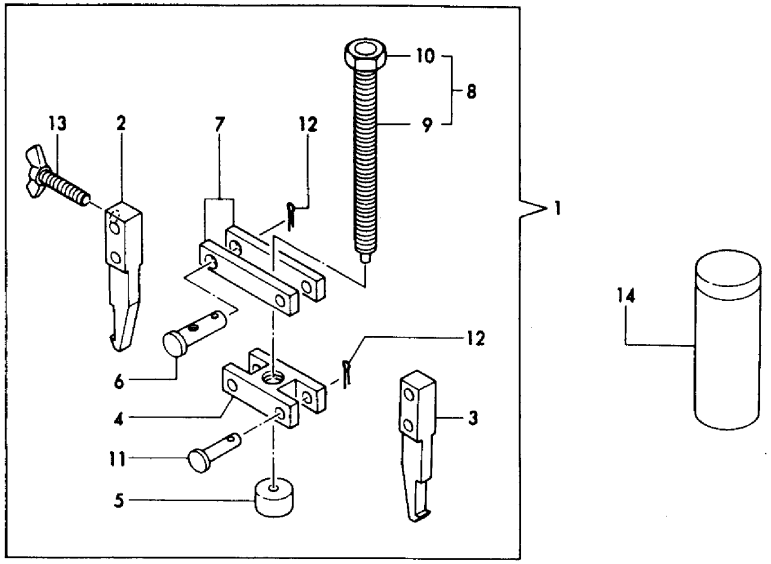

No.	Lev.	Parts No.	Description	Q'ty (A)	(B)	(C)	(D)	(E)	(F)	I	R
1	1	177088-09010	TOOL ASSY, REMOVER	1							
2	2	177088-09020	TOOL	1							
3	2	177088-09030	TOOL	1							
4	2	177088-09040	SUPPORT	1							
5	2	177088-09050	RETAINER	1							
6	2	177088-09060	PIN	1							
7	2	177088-09070	SUPPORT	2							
8	2	177088-09080	BOLT ASSY	1							
9	3	177088-09090	BOLT	1							
10	3	26736-100002	NUT, M10	1							
11	2	22487-060240	PIN, H 6X 24	3							
12	2	22414-160120	PIN, COTTER 1.6X12	4							
13	2	26646-040352	WING BOLT	1							
14	1	177088-09150	TOOL, DRIVE	1							

N:Old $\xleftrightarrow[\text{No}]{\text{Yes}}$ New, Q:Old $\xleftrightarrow[\text{Yes}]{\text{No}}$ New, R:Old $\xleftrightarrow[\text{Yes}]{\text{Yes}}$ New, S:Old $\xleftrightarrow[\text{No}]{\text{No}}$ New, W:Add, Z:Discontinued, F:Interchangeable by set, K:Q'ty Change

Copyright (C) YANMAR CO., LTD. All RightsReserved.

Fig.102. CLUTCH HOUSING

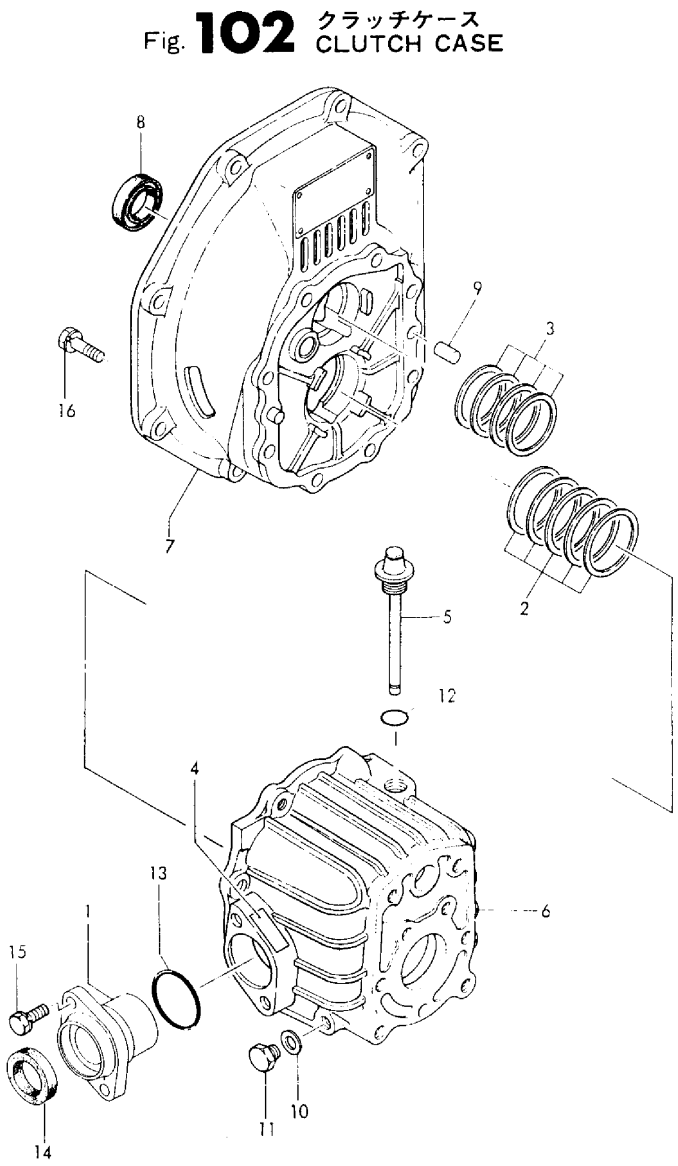

(A)=KM3V (D)=
(B)= (E)=
(C)= (F)=

No.	Lev.	Parts No.	Description	Q'ty (A)	(B)	(C)	(D)	(E)	(F)	I	R
1	1	177088-02120	COVER	1							
2	1	177088-02300	SHIM SET	1							
3	1	177088-02350	SHIM SET	1							
4	1	177088-02430	LABEL	1							
5	1	177088-02451	DIPSTICK	1							
6	1	177070-02511	HOUSING, CLUTCH	1							
7	1	177070-02520	FLANGE	1							
8	1	177088-02950	SEAL SC25 40 8, OIL	1							
9	1	22312-100160	PIN, PARALLEL M10X16	2							
10	1	23414-100000	GASKET, 10X1.0	1							
11	1	23887-100002	PLUG, 10	1							
12	1	24311-000180	O-RING, 1AP18.0	1							
13	1	24321-000400	O-RING, 1AG40.0	1							
14	1	24421-284008	SEAL, OIL TC284008	1							
15	1	26013-080252	BOLT, SPRING M8X 25	2							
16	1	26016-080252	BOLT, M8X 25	8							

N:Old ◄Yes/No► New, Q:Old ◄No/Yes► New, R:Old ◄Yes/Yes► New, S:Old ◄No/No► New, W:Add, Z:Discontinued, F:Interchangeable by set, K:Q'ty Change

Copyright (C) YANMAR CO., LTD. All RightsReserved.

Fig.103. V-DRIVE HOUSING

(A)=KM3V (D)=
(B)= (E)=
(C)= (F)=

Fig. 103 Vドライブケース V-DRIVE HOUSING

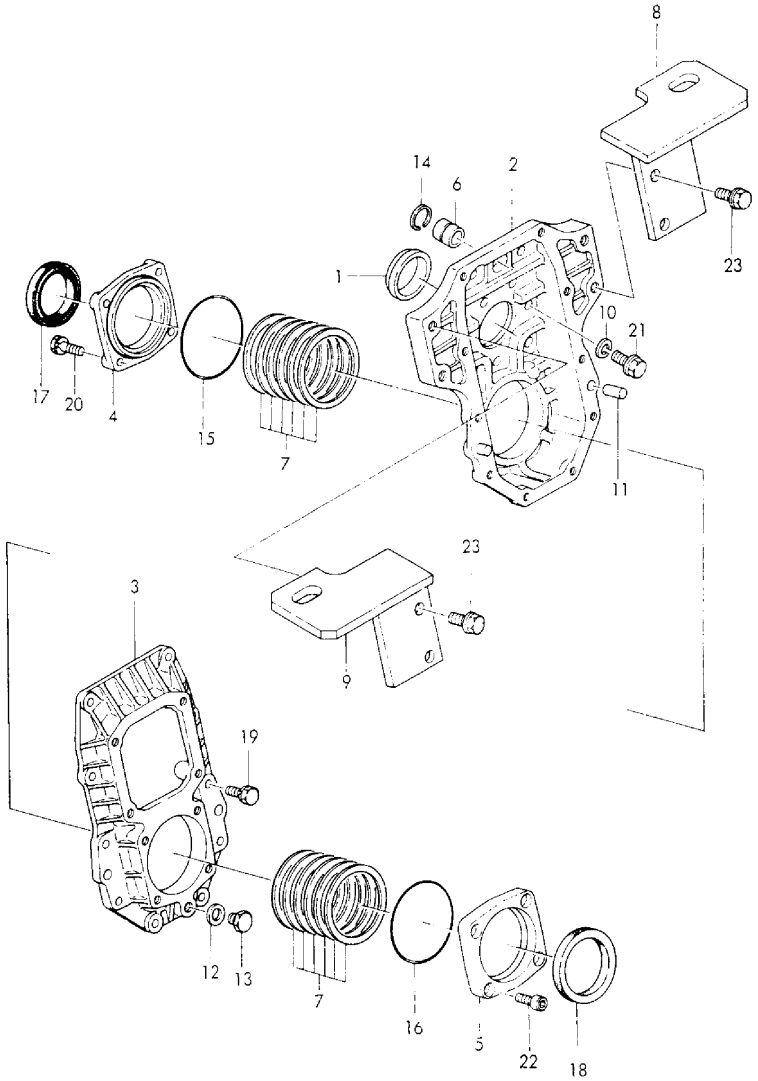

No.	Lev.	Parts No.	Description	Q'ty (A)	(B)	(C)	(D)	(E)	(F)	I	R
1	1	177070-02680	BUSH	1							
2	1	177070-02801	HOUSING, DRIVE	1							
3	1	177070-02811	HOUSING, DRIVE	1							
4	1	177070-02820	COVER	1							
5	1	177070-02830	COVER	1							
6	1	177070-02840	PIN, PARALLEL	1							
7	1	177070-02850	SHIM SET	2							
8	1	177070-02900	BRACKET	1							
9	1	177070-02910	BRACKET	1							
10	1	22287-100000	WASHER, 10	8							
11	1	22312-100160	PIN, PARALLEL M10X16	2							
12	1	23414-100000	GASKET, 10X1.0	1							
13	1	23887-100002	PLUG, 10	1							
14	1	24164-000202	CIRCLIP, 20	1							
15	1	24341-000750	O-RING, 1AS75.0	1							
16	1	24341-000750	O-RING, 1AS75.0	1							
17	1	24421-456209	SEAL, OIL TC456209	1							
18	1	24421-557209	SEAL, OIL TC557209	1							
19	1	26016-080252	BOLT, M8X 25	10							
20	1	26016-080252	BOLT, M8X 25	4							
21	1	26106-100252	BOLT, M10X 25 PLATED	8							
22	1	26450-080202	BOLT, M8X 20	4							
23	1	26106-100252	BOLT, M10X 25 PLATED	4							

N:Old ◄Yes/No► New, Q:Old ◄No/Yes► New, R:Old ◄Yes/Yes► New, S:Old ◄No/No► New, W:Add, Z:Discontinued, F:Interchangeable by set, K:Q'ty Change

Copyright (C) YANMAR CO., LTD. All RightsReserved.

Fig.104. INPUT SHAFT

(A)=KM3V (D)=
(B)= (E)=
(C)= (F)=

No.	Lev.	Parts No.	Description	Q'ty (A)	(B)	(C)	(D)	(E)	(F)	I	R
1	1	177070-03011	SHAFT, INPUT I=2.61	1							
2	1	177070-03021	SHAFT, INPUT I=3.20	1							
3	1	177070-03031	SHAFT, INPUT I=2.36	1							
4	1	177088-03400	ROLLER BERING	2							
5	1	177070-03500	DISK, DAMPER	1							

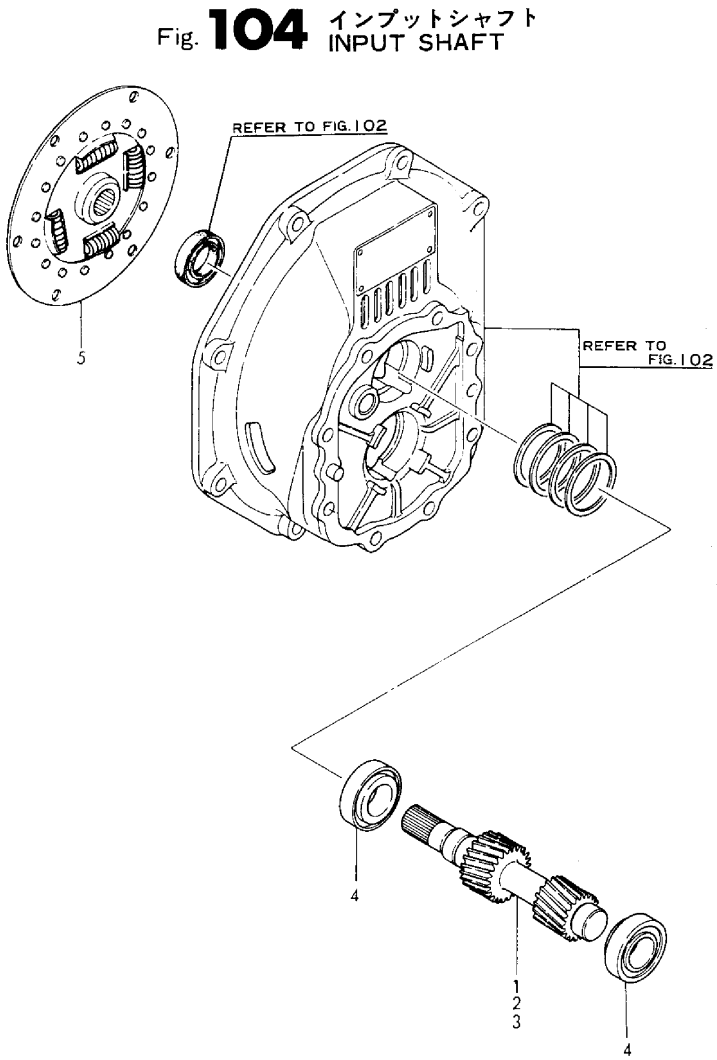

N:Old ⇄(Yes/No) New, Q:Old ⇄(No/Yes) New, R:Old ⇄(Yes/Yes) New, S:Old ⇄(No/No) New, W:Add, Z:Discontinued, F:Interchangeable by set, K:Q'ty Change

Copyright (C) YANMAR CO., LTD. All RightsReserved.

Fig.105. SUPPORT SHAFT

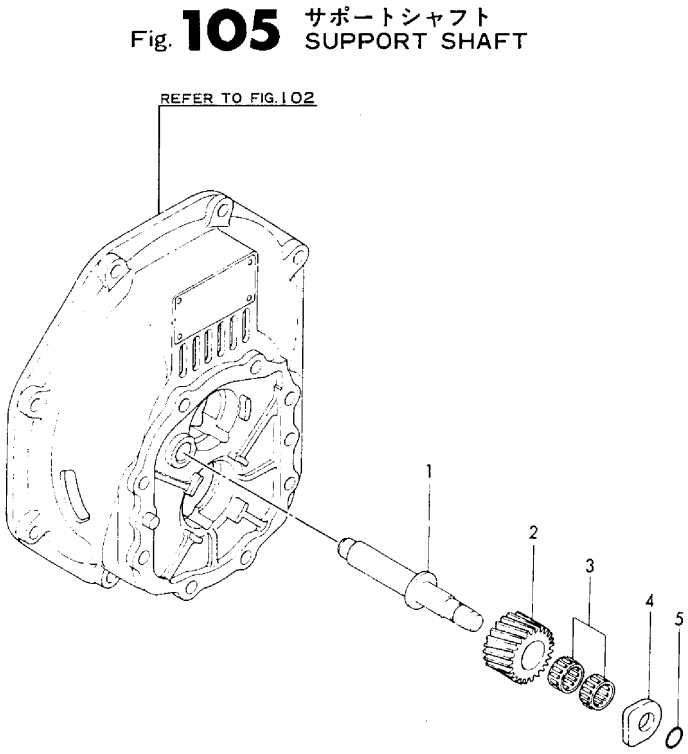

(A)=KM3V (D)=
(B)= (E)=
(C)= (F)=

No.	Lev.	Parts No.	Description	Q'ty (A)	(B)	(C)	(D)	(E)	(F)	I	R
1	1	177070-03302	SHAFT, IDLE	1							
2	1	177088-03311	GEAR, IDLE Z=26	1							
3	1	177088-03331	NEEDLE BERG.#K162213	2							
4	1	177088-03341	WASHER, THRUST	1							
5	1	24341-000120	O-RING, 1AS12.0	1							

N:Old ◄Yes/No► New, Q:Old ◄No/Yes► New, R:Old ◄Yes/Yes► New, S:Old ◄No/No► New, W:Add, Z:Discontinued, F:Interchangeable by set, K:Q'ty Change

Copyright (C) YANMAR CO., LTD. All RightsReserved.

Fig.106. OUTPUT SHAFT

(A)=KM3V (D)=
(B)= (E)=
(C)= (F)=

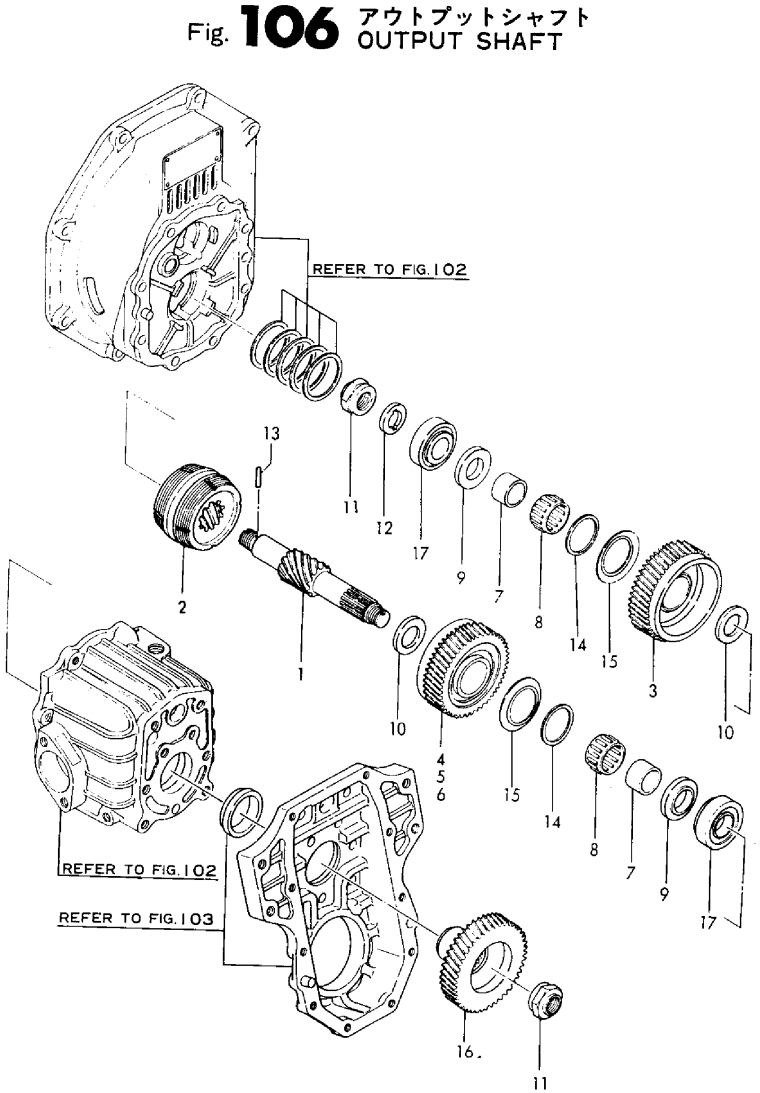

No.	Lev.	Parts No.	Description	Q'ty (A)	(B)	(C)	(D)	(E)	(F)	I	R
1	1	177070-03041	SHAFT, OUTPUT	1							
2	1	177070-03071	CONE, DRIVE	1							
3	1	177070-03112	GEAR, Z=60	1							
4	1	177070-03112	GEAR, Z=60	1							
5	1	177070-03122	GEAR, FORWARD Z=64	1							
6	1	177070-03131	GEAR, FORWARD Z=59	1							
7	1	177070-03190	RACE, BEARING	2							
8	1	177070-03200	NEEDLE BEARING	2							
9	1	177070-03231	COLLAR, THRUST	2							
10	1	177070-03250	COLLAR, THRUST	2							
11	1	177088-03272	NUT	2							
12	1	177088-03280	COLLAR, 32D-45T	1							
13	1	177088-03290	PIN	1							
14	1	177073-03340	RETAINER, SPRING	2							
15	1	177088-03540	SPRING	2							
16	1	177070-03600	GEAR, Z=46	1							
17	1	24141-302050	BEARING, 30205	2							

N:Old $\xleftarrow[\text{No}]{\text{Yes}}$ New, Q:Old $\xleftarrow[\text{Yes}]{\text{No}}$ New, R:Old $\xleftarrow[\text{Yes}]{\text{Yes}}$ New, S:Old $\xleftarrow[\text{No}]{\text{No}}$ New, W:Add, Z:Discontinued, F:Interchangeable by set, K:Q'ty Change

Copyright (C) YANMAR CO., LTD. All RightsReserved.

Fig.107. V-DRIVE SHAFT

(A)=KM3V (D)=
(B)= (E)=
(C)= (F)=

No.	Lev.	Parts No.	Description	Q'ty (A)	(B)	(C)	(D)	(E)	(F)	I	R
1	1	177070-03610	SHAFT, DRIVE	1							
2	1	177070-03620	COUPLING	1							
3	1	177070-03630	NUT, LOCK	1							
4	1	24141-320090	BEARING, 32009	2							
5	1	24321-000400	O-RING, 1AG40.0	1							
6	1	104214-83980	COUPLING	1							1
7	1	26206-100302	BOLT, M10X 30 PLATED	4							1
8	1	26450-080302	BOLT, M8X 30	4							1
9	1	26706-100002	NUT, M10	4							1

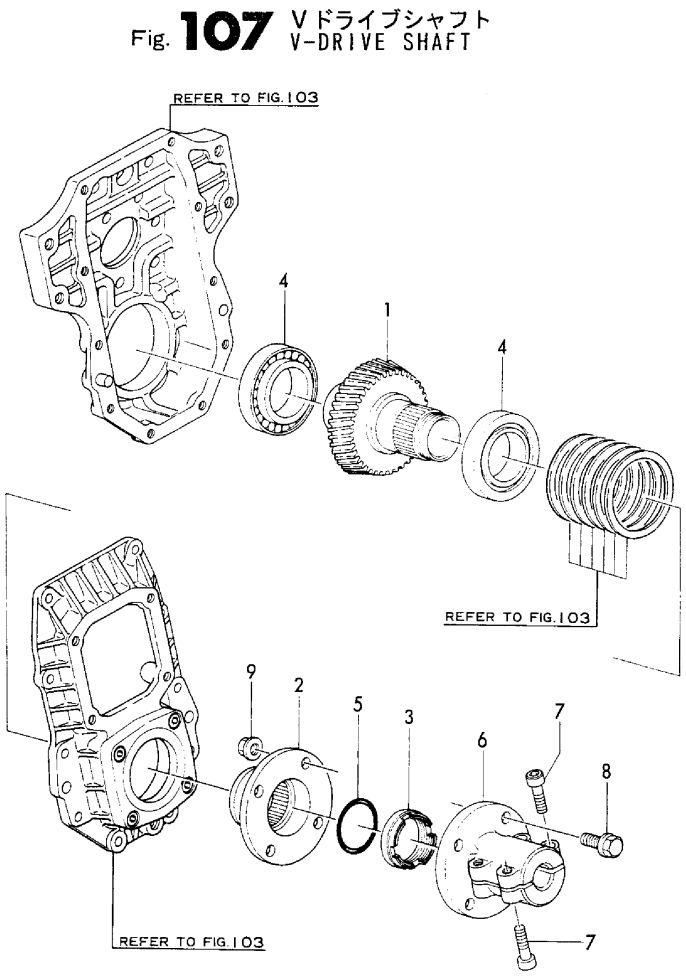

Remarks
1) OPTIONAL

N:Old $\frac{\text{Yes}}{\text{No}}$ New, Q:Old $\frac{\text{No}}{\text{Yes}}$ New, R:Old $\frac{\text{Yes}}{\text{Yes}}$ New, S:Old $\frac{\text{No}}{\text{No}}$ New, W:Add, Z:Discontinued, F:Interchangeable by set, K:Q'ty Change

Copyright (C) YANMAR CO., LTD. All RightsReserved.

Fig.108. LUB. OIL COOLER

(A)=KM3V (D)=
(B)= (E)=
(C)= (F)=

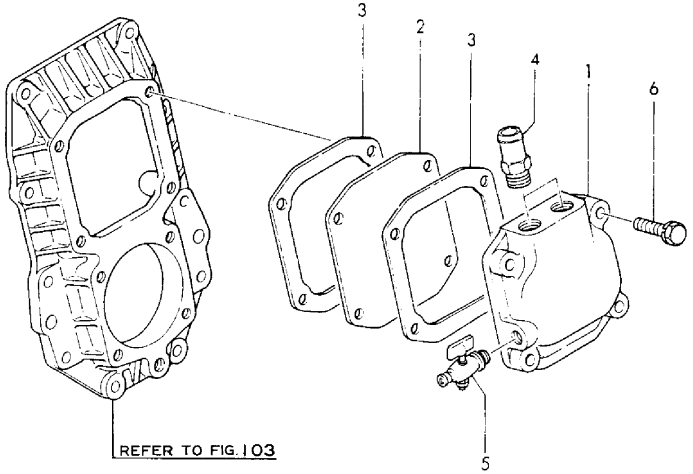

No.	Lev.	Parts No.	Description	Q'ty (A)	(B)	(C)	(D)	(E)	(F)	I	R
1	1	177070-04250	BODY, COOLER	1							
2	1	177070-04260	PLETE, COOLER	1							
3	1	177070-04270	GASKET	2							
4	1	177070-04280	JOINT	2							
5	1	128695-44090	COCK	1							
6	1	26016-080352	BOLT, M8X 35	4							

N:Old $\xleftrightarrow[\text{No}]{\text{Yes}}$ New, Q:Old $\xleftrightarrow[\text{Yes}]{\text{No}}$ New, R:Old $\xleftrightarrow[\text{Yes}]{\text{Yes}}$ New, S:Old $\xleftrightarrow[\text{No}]{\text{No}}$ New, W:Add, Z:Discontinued, F:Interchangeable by set, K:Q'ty Change

Copyright (C) YANMAR CO., LTD. All RightsReserved.

Fig.109. REMOTE CONTROL DEVICE

Fig. 109 操縦装置 REMOTE CONTOROL DEVICE

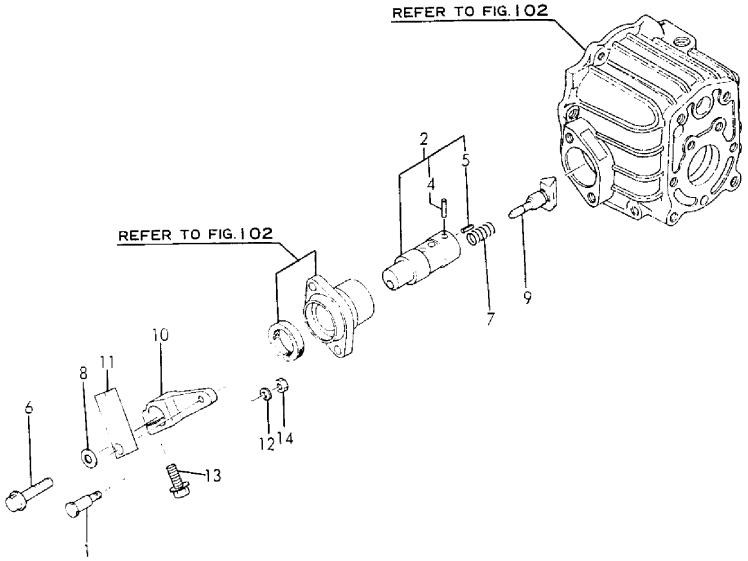

(A)=KM3V (D)=
(B)= (E)=
(C)= (F)=

No.	Lev.	Parts No.	Description	Q'ty (A)	(B)	(C)	(D)	(E)	(F)	I	R
1	1	177088-06101	CONNECTOR	1							
2	1	177088-06340	SHAFT ASSY	1							
4	2	196322-06610	PIN, PARALLEL 5X18	1							
5	2	22351-020012	PIN, SPRING 2.0X12	1							
6	1	177088-06360	BOLT	1							
7	1	177088-06370	SPRING	1							
8	1	177088-06380	SHIM SET	1							
9	1	177088-06390	SHIFTER	1							
10	1	177088-06400	LEVER	1							
11	1	177088-06410	JOINT, 10-32UNF	1							
12	1	22137-060000	WASHER, 6	1							
13	1	26106-080252	BOLT, M8X 25 PLATED	1							
14	1	26716-060002	NUT, M6	1							

N:Old $\xleftarrow[\text{No}]{\text{Yes}}$ New, Q:Old $\xleftarrow[\text{Yes}]{\text{No}}$ New, R:Old $\xleftarrow[\text{Yes}]{\text{Yes}}$ New, S:Old $\xleftarrow[\text{No}]{\text{No}}$ New, W:Add, Z:Discontinued, F:Interchangeable by set, K:Q'ty Change

Copyright (C) YANMAR CO., LTD. All RightsReserved.

Fig.110. TOOL(OPTIONAL)

(A)=KM3V (D)=
(B)= (E)=
(C)= (F)=

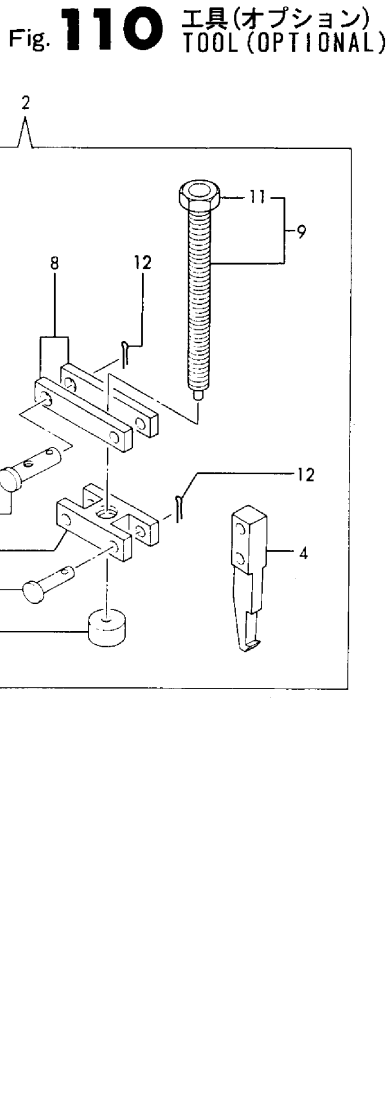

No.	Lev.	Parts No.	Description	Q'ty (A)	(B)	(C)	(D)	(E)	(F)	I	R
1	1	177070-09010	TOOL, NUT	1							
2	1	177088-09010	TOOL ASSY, REMOVER	1							
3	2	177088-09020	TOOL	1							
4	2	177088-09030	TOOL	1							
5	2	177088-09040	SUPPORT	1							
6	2	177088-09050	RETAINER	1							
7	2	177088-09060	PIN	1							
8	2	177088-09070	SUPPORT	1							
9	2	177088-09080	BOLT ASSY	1							
11	3	26736-100002	NUT, M10	1							
12	2	22417-160120	PIN, COTTER 1.6X12	4							
13	2	22487-060240	PIN, H 6X 24	3							
14	2	26646-040352	WING BOLT	1							
15	1	177088-09150	TOOL, DRIVE	1							

N:Old ◄Yes/No► New, Q:Old ◄No/Yes► New, R:Old ◄Yes/Yes► New, S:Old ◄No/No► New, W:Add, Z:Discontinued, F:Interchangeable by set, K:Q'ty Change

Copyright (C) YANMAR CO., LTD. All RightsReserved.

Fig.111. SAFETY LABEL

発行No. 000Y00F5062-1
更新年月：1995.09
REVISED : Sep.,1995

Fig.111 安全銘板 SAFETY LABEL

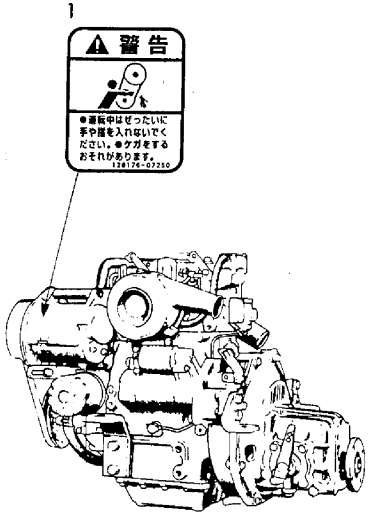

警告表示(ラベル)の部品コード番号

1	部品番号	128176-07250

安全銘板の貼付け位置は、取扱説明書をご参照下さい。

今回この項目を追加しました。
THIS FIGURE IS NEWLY ADDED.

(A)=3GM30
(B)=3GM30VE
(C)=3GM30B
(D)=3GM30C
(E)=3GM30F
(F)=3GM30FVE

No.	Lev.	Parts No.	Description	Q'ty (A)	(B)	(C)	(D)	(E)	(F)	I	R
1	1	128176-07250	LABEL, CAUTION		1	1	1				

N:Old ⇄(Yes/No) New, Q:Old ⇄(No/Yes) New, R:Old ⇄(Yes/Yes) New, S:Old ⇄(No/No) New, W:Add, Z:Discontinued, F:Interchangeable by set, K:Q'ty Change

Copyright (C) YANMAR CO., LTD. All RightsReserved.

Parts No. Index

Parts No.	Fig. No.	Ref. No.
101104-92180	88	4
101147-11900	16	60
	17	54
101147-59810	51	7
101158-11190	16	9
	17	9
101158-11230	16	45
		51
	17	39
		45
101200-92140	88	3
101720-55750	46	7
102210-07990	10	3
103288-39170	31	6
	51	4
103338-11430	16	56
	17	50
103854-51251	43	23
103854-51660	43	31
103854-53180	45	11
103854-59191	49	11
	50	11
103854-59201	49	12
	50	12
104200-11180	16	18
	17	18
104200-11920	20	8
104200-14200	22	6
	23	6
104200-61200	52	4
104200-92350	69	7
104211-03770	56	3
104211-11370	16	11
	17	11
104211-42050	32	3
104211-42070	32	5
	89	12
104211-42080	32	6
104211-42090	32	7
	91	16
104211-42100	32	8
104211-42110	32	9
104211-42120	32	10
104211-42130	32	11
	52	1
104211-49080	37	2
104211-49160	40	7
	91	19
104211-53120	45	8
104214-13580	72	5

Parts No.	Fig. No.	Ref. No.
104214-13580	73	5
104214-83980	82	1
	107	6
104264-59020	49	20
		21
	50	19
		20
104264-59030	44	3
104271-67550	78	1
104271-91351	84	16
104271-91352	85	12
104500-55710	46	3
	89	18
	90	18
104511-78780	32	22
	33	22
	89	19
	90	19
104884-59170	49	4
	50	4
105225-02020	8	5
	91	8
105225-02300	8	20
105225-11100	16	6
	17	6
105225-11110	16	7
	17	7
105225-11350	16	12
	17	12
105225-22300	25	8
105225-22400	25	9
105225-23180	26	9
105225-23200	26	4
105311-01090	1	4
	2	4
105311-11420	16	54
	17	48
105311-22090	25	1
105311-23380	26	7
105311-67100	57	1
105311-67200	57	3
105500-51300	43	7 -1
105582-07061	10	2
105582-49200	40	1
	89	13
105582-59150	44	4
	49	10
	50	10
105583-49910	1	21
105583-85900	80	1

Parts No.	Fig. No.	Ref. No.
110250-53150	45	10
110250-55610	46	5
111100-51220	43	19
113200-53110	45	7
113200-53120	45	9
119173-59120	49	2 -1
	50	2 -1
119183-91860	85	5
119305-35151	29	6 -2
	89	10 -2
	90	10 -2
119305-35170	29	8
	89	10 -3
	90	10 -3
119660-35150	29	6 -1
	89	10 -1
	90	10 -1
120130-49350	35	26
120324-91610	85	25
120324-91690	85	16
120445-44530	36	1
120445-44540	36	2
120445-44620	10	9
121000-01850	3	18
	4	18
121000-03020	9	1
121000-03070	9	2
	91	9
121000-03080	9	6
121000-03200	9	4
121000-11050	16	17
	17	17
121000-14550	22	2
	23	2
121000-42051	34	2
	91	15
121000-42100	34	3
121000-61600	52	16
121000-66090	53	3
121150-35100	29	5
121150-51460	43	36
121250-59860	47	6
	48	5
121370-49040	38	1 A
		3
121370-55730	46	4
121450-01203	1	18
	2	16
121450-01210	1	6
	2	6

Parts No.	Fig. No.	Ref. No.
121450-01220	1	7
	2	7
121450-01560	3	3
	4	3
121450-01751	5	2 -1
	91	4
121450-01800	3	13
	4	13
121450-01801	3	13 -1
	4	13 -1
121450-01951	3	22
	4	22
121450-01960	1	12
	2	12
121450-01980	1	13
	2	13
121450-01990	1	11 -1
	2	11 -1
121450-02071	8	13
		19
121450-02100	1	14
	2	15
	8	7
121450-02110	8	3
121450-02160	8	10
121450-02170	8	16
121450-02310	1	31
	2	28
	8	24
121450-02320	8	21
121450-02370	8	22
121450-02380	8	23
121450-11240	16	34
	17	28
121450-11260	16	32
	17	26
121450-11270	16	33
	17	27
121450-11310	18	12
	91	10
121450-11670	17	19
121450-11680	16	20
	17	20
	91	11
121450-11681	16	20 -1
	17	20 -1
	91	11 -1
121450-13250	20	9
	35	31
	89	4

Parts No. Index

Parts No.	Fig. No.	Ref. No.
121450-13250	90	4
121450-13251	20	9 -1
	35	31 -1
	89	4 -1
	90	4 -1
121450-14400	22	7
	23	7
121450-21540	24	8
121450-21541	24	8 -1
121450-32021	27	1
	91	13
121450-32050	27	4
		4 -1
121450-32060	27	4 A
121450-32200	27	10
121450-35090	29	1
121450-42240	34	6
121450-42260	34	7
121450-42310	34	8
121450-44410	34	16
	40	4
	91	18
121450-51500	43	24
121450-51550	43	25
121450-59850	47	5
121465-59950	47	8
121520-01850	44	1
	91	5
121520-01851	44	1 -1
	91	5 -1
121550-11280	16	37
	17	31
121550-11290	16	38
	17	32
121574-21500	24	14
121574-86320	67	4
121575-01510	3	7
	4	7
	91	3
121575-01511	3	7 -1
	4	7 -1
	91	3 -1
121575-01860	3	19
	4	19
	91	6
121575-01861	3	19 -1
	4	19 -1
	91	6 -1
121575-07230	11	1
121575-07240	11	2

Parts No.	Fig. No.	Ref. No.
121575-07240	12	2
121575-11121	16	8
	17	8
121575-11670	16	19
121575-14090	22	3
	23	3
121575-32090	27	2
121575-34830	28	2
121575-42000	33	1
121575-42020	33	4
121575-42120	33	16
121575-42150	33	13
121575-49300	20	7
	33	18
	72	12
121575-49310	39	3
121575-61160	52	12
121575-61161	52	12 -1
121575-61220	52	5
121575-61620	52	17
121575-61710	52	18
121575-61720	52	19
121575-66051	53	2
121575-66200	53	9
121575-66310	52	20
121575-66510	56	1
121575-66550	56	5
121575-66580	56	6
121575-66800	54	1
	55	6
121575-66850	54	2
121575-67580	57	8
121575-67581	57	8 -1
121575-91250	85	10
121750-39550	31	9
121750-49800	41	3
	90	13
121750-59890	42	7
122410-61650	52	15
122780-09320	15	4
	16	23
123210-09310	1	16
	15	2
		5
	16	24
123310-77640	62	1
123372-03150	12	3
123372-59100	47	4
	48	4
123482-91291	85	11

Parts No.	Fig. No.	Ref. No.
123682-07850	10	6
123682-44190	35	14
123682-44200	35	17
123682-44201	35	17 -1
123682-44210	35	15
123682-44220	35	16
124060-01050	1	3
	2	3
	3	6
	4	6
124060-11160	16	3
	17	3
124060-39451	31	15
	89	11
	90	11
124060-59380	49	13
	50	13
124070-13300	72	3
	73	3
124070-13520	72	1
	73	1
124070-14760	22	11
124070-42060	32	4
124070-42400	32	12
	33	17
124070-42410	32	13
124070-42420	32	14
	33	6
124070-59060	77	2
124070-59130	77	3
124070-77950	63	4
124070-91250	68	8
	84	10
	86	7
124070-91290	68	9
	84	11
	86	8
124070-91300	68	12
	84	14
	86	11
124085-01900	1	9
	2	9
124085-02220	8	4
124085-35300	30	1
124085-35350	30	7
124085-92210	88	5
124085-92250	88	6
124085-92260	88	7
124085-92270	88	8
124085-92400	88	9

Parts No.	Fig. No.	Ref. No.
124085-92700	88	17
124101-49530	41	1 -1
124160-01751	18	10
124160-11360	18	13
124160-34844	28	3
	91	14
124160-34845	28	3 -1
	91	14 -1
124160-39140	31	11
124160-39540	31	8
124160-49480	2	19
	35	25
124220-09340	10	8
124220-51890	43	30
124223-42040	33	9
124223-42070	33	10
124223-42080	33	8
124223-42091	33	3
	90	12
124223-42110	33	14
	91	17
124223-49050	42	4
	76	2
124223-49750	20	11
124240-01871	1	23
	2	20
124240-01882	1	24
	2	21
	91	7
124240-01883	1	24 -1
	2	21 -1
	91	7 -1
124250-03640	56	4
124323-42100	33	19
124450-35070	29	4
124450-35100	29	6
	89	10
	90	10
124450-35110	29	7
124450-39180	31	7
	51	5
124450-39240	31	14
	49	1
	50	1
124460-77680	1	28
	2	25
	35	27
		29 -1
124550-35350	88	2
124550-51200	43	18

Parts No. Index

Parts No.	Fig. No.	Ref. No.
124550-51320	43	11
124550-51341	43	12
124550-51350	43	10
124550-51370	43	13
124550-51590	43	26
124550-59820	31	10
124550-77030	59	2
124617-91980	85	4
124617-91990	85	34
124722-59050	35	29
124732-42290	61	3
	90	20
124736-49540	41	2 -1
	91	20 -1
124770-11770	19	7
124770-49040	39	2
124770-53000	45	2
	89	15
	90	15
124770-77940	63	3
124772-08341	14	1
124790-44470	35	20
124790-44560	36	3
124790-55601	46	1
124790-59530	51	6
124950-11340	16	10
	17	10
124950-11450	16	57
	17	51
124950-21600	24	13
124950-51190	43	15
124950-51270	43	6
124950-51450	43	35
124950-51510	43	14
124950-51640	43	28
124950-51670	43	29
126630-07370	10	5
127610-42130	20	6
127610-91350	41	4
	90	14
127611-07350	10	4
127687-91870	85	35
127687-91880	85	36
127692-91410	85	30
127692-91440	85	31
127692-91450	85	32
128170-01600	6	1
128170-01830	3	16
128170-07850	10	7
128170-08100	13	1

Parts No.	Fig. No.	Ref. No.
128170-08120	13	2
128170-08130	13	3
128170-14150	22	5
	23	5
128170-49080	42	1
128170-49081	42	1 -1
128170-49150	40	6
128170-51101	43	3
128170-51300	43	7
128170-53080	45	5
128170-66870	55	7
128170-66880	55	8
128170-66890	55	12
128170-76790	58	1
128170-77010	59	1
	70	1
128170-77500	63	6
	87	1
128170-86300	67	1
128170-86500	83	1
128170-91001	84	1
128170-91010	84	2
128170-91020	84	3
128170-91031	84	4
128170-91100	84	6
128170-91160	84	20
128170-91310	84	15
128170-91810	68	15
	84	17
	86	14
128170-91820	68	16
	84	18
	86	15
128170-91830	68	17
	84	19
	86	16
128171-07150	10	13
128171-22250	25	10
128171-81150	64	7
		7 -1
128176-07250	111	1
128270-01450	1	22
128270-01820	3	14
	4	14
128270-03610	18	3
128270-03640	18	5
128270-03750	18	4
128270-08341	14	2
128270-09300	1	15
	15	1

Parts No.	Fig. No.	Ref. No.
128270-12500	19	1
128270-12540	19	4
128270-42000	32	1
128270-42150	32	21
	33	21
128270-49010	38	1
128270-49050	38	4
128270-49100	40	3
128270-49300	32	15
128270-52010	44	2 -1
128270-66010	53	1
128270-66550	55	1
128270-77921	63	1
128270-91001	68	1
128270-91010	68	2
	86	2
128270-91020	68	3
	86	3
128270-91031	68	4
128270-91040	68	5
	86	5
128270-91230	68	7
128270-91350	68	13
	86	12
128270-91360	68	14
	86	13
128271-49450	42	6
128271-77330	60	2
	61	2
128271-77340	60	5
	61	5
128271-77920	63	1 -1
128271-77921	63	1 -2
128272-11170	16	4
	17	4
128275-11410	16	53
	17	47
128275-11490	16	58
	17	52
128275-11500	16	59
	17	53
128275-39710	74	2
128275-91340	40	2
	89	14
128290-49510	39	4
128291-49020	39	1 A
128291-49250	42	5
128296-59900	49	23
	50	22
128296-59940	49	24

Parts No.	Fig. No.	Ref. No.
128296-59940	50	23
128370-01720	5	1
128370-12730	19	5
128370-13160	20	3
128370-13180	20	4
	91	12
128370-13181	20	4 -1
	91	12 -1
128370-13200	21	1
	72	14
	73	11
	89	3
	90	3
128370-13201	21	1 -3
	72	14 -1
	73	11 -1
	90	3 -1
128370-13220	72	13
128370-13230	21	1 -1
	72	11
	89	3 -1
128370-13231	21	1 -2
	72	11 -1
	89	3 -2
128370-13530	21	2
128370-13550	21	2 -1
128370-13610	72	8
	73	8
128370-14010	22	1
	23	1
128370-21650	24	9
128370-34800	28	1
128370-39200	31	1
128370-49020	38	2
128370-49250	72	6
128370-59010	49	2
128370-59081	49	5
	50	5
128370-59500	51	1
128370-59810	47	1
128370-59820	47	2
128370-59830	47	3
128370-59950	49	24 -1
	50	23 -1
128371-01601	7	1
128371-01800	1	20
	2	18
128371-21590	24	11
128371-81010	64	1
128371-81020	64	2

Parts No. Index

Parts No.	Fig. No.	Ref. No.
128371-81030	64	3
128371-81050	64	4
	65	1
128371-91000	86	1
128371-91030	86	4
128374-01330	1	29
	2	26
	89	2
	90	2
	91	2
128374-01911	1	29 -1
	2	26 -1
	89	2 -1
	90	2 -1
	91	2 -1
128374-81110	64	1 -1
128374-81120	64	2 -1
128374-81130	64	3 -1
128374-81310	64	8
128374-81320	64	9
128374-81330	64	10
128377-59550	49	22
	50	21
128390-44010	35	2
128390-44401	35	19
128390-44480	35	23
128390-44490	35	22
128390-44491	35	22 -1
128390-44900	35	1 -1
128390-59010	50	2
128390-59810	48	1
128390-59820	48	2
128390-59830	48	3
128391-77700	63	6 -1
	85	38
128391-77860	68	18
	84	21
128391-91130	85	1
128391-91200	85	2
128391-91260	85	5 -1
128391-91440	85	23
128391-91640	85	22
128391-91700	85	7
128391-91740	85	24
128391-91850	85	33
128391-91860	85	6
128391-91930	85	18
128670-01830	4	16
128670-13350	16	29
	20	13

Parts No.	Fig. No.	Ref. No.
128670-77350	60	3
	89	20
128690-44060	35	4
128690-49010	39	1
128690-49250	73	6
128690-49310	35	5
128690-49530	41	1
128695-07230	12	1
128695-42010	34	1
128695-42350	34	15
128695-44050	35	3
128695-44070	35	10
128695-44090	35	9
	108	5
128695-49520	39	5
128695-49530	39	6
129100-01580	1	10 -1
	2	10 -1
129170-91650	85	8
129170-91800	85	13
129170-91810	85	17
129198-07350	10	4 -1
129301-52020	44	2
129350-01230	1	19
	2	17
129350-14100	22	4
	23	4
129350-21200	24	7
129350-42200	34	5
129350-49540	41	2
	91	20
129574-91410	85	9
129574-91420	85	20
129574-91620	85	19
129574-91650	85	29
129574-91710	85	26
129574-91720	85	21
129574-91750	85	27
129574-91760	85	37
129574-91770	85	28
129574-91780	85	14
129574-91790	85	15
129574-91870	85	3
129772-77200	60	1
	61	1
	71	1
129C26-01890	1	24 -2
	2	21 -2
	91	7 -2
135210-51900	46	9

Parts No.	Fig. No.	Ref. No.
135210-61090	55	14
138603-59380	77	6
171016-61100	52	2
171051-01921	2	14
172100-53200	45	12
174100-54120	43	21
174307-51170	43	16
174307-51181	43	17
174307-51700	43	22
177070-02011	92	1
177070-02012	97	1
177070-02031	92	7
	97	7
177070-02511	102	6
177070-02520	102	7
177070-02680	103	1
177070-02801	103	2
177070-02811	103	3
177070-02820	103	4
177070-02830	103	5
177070-02840	103	6
177070-02850	103	7
177070-02900	103	8
177070-02910	103	9
177070-03010	93	3
177070-03011	98	3
	104	1
177070-03020	93	4
177070-03021	98	4
	104	2
177070-03030	93	2
177070-03031	98	2
	104	3
177070-03040	94	1
177070-03041	99	1
	106	1
177070-03070	94	2
177070-03071	99	2
	106	2
177070-03111	94	4
		6
177070-03112	99	4
		6
	106	3
		4
177070-03121	94	5
177070-03122	99	5
	106	5
177070-03130	94	3
177070-03131	99	3

Parts No.	Fig. No.	Ref. No.
177070-03131	106	6
177070-03190	94	7
	99	7
	106	7
177070-03200	94	8
	99	8
	106	8
177070-03230	94	9
177070-03231	99	9
	106	9
177070-03250	94	10
	99	10
	106	10
177070-03301	93	5
177070-03302	98	5
	105	1
177070-03500	104	5
177070-03501	64	4 -1
	65	1 -1
177070-03550	94	12
	99	12
177070-03600	106	16
177070-03610	107	1
177070-03620	107	2
177070-03630	107	3
177070-04250	108	1
177070-04260	108	2
177070-04270	108	3
177070-04280	108	4
177070-09010	110	1
177073-03340	99	18
	106	14
177088-02091	92	2
177088-02120	97	2
	102	1
177088-02300	97	9
	102	2
177088-02350	92	6
	97	6
	102	3
177088-02430	10	1
	102	4
177088-02450	92	10
177088-02451	97	10
	102	5
177088-02950	92	12
	97	12
	102	8
177088-02961	92	13
	97	13

Parts No. Index

Parts No.	Fig. No.	Ref. No.
177088-02970	92	14
177088-03272	94	11
	99	11
	106	11
177088-03280	94	16
	99	16
	106	12
177088-03290	94	15
	99	15
	106	13
177088-03311	93	6
	98	6
	105	2
177088-03331	93	7
	98	7
	105	3
177088-03341	93	8
	98	8
	105	4
177088-03400	93	1
	98	1
	104	4
177088-03540	99	17
	106	15
177088-06010	95	3
177088-06020	95	5
177088-06050	95	9
177088-06070	95	10
177088-06090	95	11
177088-06100	95	18
177088-06101	100	5
	109	1
177088-06110	95	17
177088-06120	95	12
177088-06140	95	14
177088-06150	95	15
177088-06160	95	16
177088-06170	95	13
177088-06340	109	2
177088-06350	100	3
177088-06360	100	9
	109	6
177088-06370	100	10
	109	7
177088-06380	100	13
	109	8
177088-06390	100	4
	109	9
177088-06400	100	1
	109	10

Parts No.	Fig. No.	Ref. No.
177088-06410	100	6
	109	11
177088-09010	96	1
	101	1
	110	2
177088-09020	96	2
	101	2
	110	3
177088-09030	96	3
	101	3
	110	4
177088-09040	96	4
	101	4
	110	5
177088-09050	96	5
	101	5
	110	6
177088-09060	96	6
	101	6
	110	7
177088-09070	96	7
	101	7
	110	8
177088-09080	96	8
	101	8
	110	9
177088-09090	96	9
	101	9
177088-09150	96	14
	101	14
	110	15
177088-09160	96	15
177090-02250	92	9
177095-03190	95	4
177095-06040	95	1
194440-51620	49	19
	50	18
196311-34250	83	2
196322-06610	100	11
	109	4
22117-050000	43	32
22117-060000	19	8
	56	7
	95	19
22117-080000	49	15
22137-060000	39	9
	100	7
	109	12
22137-100000	16	14
	17	14

Parts No.	Fig. No.	Ref. No.
22190-060002	49	14
	50	14
22190-080002	49	16 -1
	50	15 -1
22190-120002	49	17 -1
		18 -1
		26
	50	16 -1
		17 -1
		25
22212-050000	67	6
22217-050000	9	8
	43	33
	68	11
	84	9
		13
	86	10
22217-060000	34	17
	56	8
22217-080000	16	30
	20	14
	21	3
	40	9
	59	3
22242-000100	52	21
	57	7
22242-000120	53	6
22242-000140	16	39
	17	33
22242-000150	33	11
22252-000300	32	16
22252-000350	33	12
22287-080000	92	5
22287-100000	103	10
22312-030220	18	6
22312-040080	52	22
22312-080160	1	10
	2	10
	24	4
22312-100160	92	17
	97	5
	102	9
	103	11
22322-030160	56	9
22322-030200	52	10
22351-020012	100	12
	109	5
22351-030012	52	11
22351-040008	52	23
22351-040010	3	5

Parts No.	Fig. No.	Ref. No.
22351-040010	4	5
22351-060012	1	5
	2	5
22360-080000	57	9 -1
22414-160120	96	12
	101	12
22414-250150	57	9
22417-160120	110	12
22451-100000	55	9
22487-060240	96	11
	101	11
	110	13
22512-070180	24	5
		6
22512-070300	22	8
	23	8
22724-800380	37	5
	62	2
	76	5
23000-016000	49	25
	50	24
23000-022000	37	3
	38	5
	42	2
		2 -1
23000-025000	38	6
		7
	39	7
	42	3
	72	7
	73	7
	76	3
23000-041000	39	8
23010-013000	36	4
23010-014000	77	7
23061-070200	1	27
	2	24
23061-070300	1	27 -1
	35	28
		30
23061-100300	20	10
23080-013000	9	5
23080-018000	74	3
23414-050000	35	8
23414-060000	55	10
23414-080000	1	26
	2	23
	31	12
	44	5
	49	16

Parts No. Index

Parts No.	Fig. No.	Ref. No.
23414-080000	50	15
	51	8
	91	21
23414-080012	46	10
23414-100000	31	13
	91	22
	92	16
	95	8
	97	16
	102	10
	103	12
23414-120000	49	17
		18
	50	16
		17
	91	23
23414-160021	92	11
23414-250000	15	7
	16	26
	91	24
23418-060000	46	8
23857-060000	49	3
		27
	50	3
		26
23871-020000	34	12
23871-030000	16	5
	17	5
	20	7 -1
	34	9
		13
23873-030000	41	5
23883-100002	92	15
	95	7
23887-100002	97	15
	102	11
	103	13
23887-180002	6	3
	7	3
24101-062054	22	9
	23	9
24101-063050	3	15
	4	15
24107-062004	32	17
24107-062024	33	7
24141-302050	94	14
	99	14
	106	17
24141-320090	107	4
24164-000202	103	14

Parts No.	Fig. No.	Ref. No.
24190-080001	18	8
24190-110001	16	36
	17	30
24311-000070	18	7
	56	10
24311-000090	53	7
24311-000100	1	8
	2	8
	91	25
24311-000120	18	14
24311-000160	35	6
	91	26
24311-000180	97	11
	102	12
24311-000210	94	13
	99	13
24311-000700	35	21
	91	27
24321-000350	18	11
	91	28
24321-000400	97	3
	102	13
	107	5
24341-000120	93	9
	98	9
	105	5
24341-000260	16	61
	17	55
24341-000440	46	6
24341-000600	92	3
24341-000750	103	15
		16
24421-284008	97	14
	102	14
24421-456209	103	17
24421-557209	103	18
26013-060142	19	9
26013-060162	44	6
	46	11
26013-060222	27	11
26013-080142	64	5
	65	2
26013-080202	8	6
26013-080252	20	5
	97	4
	102	15
26013-100252	7	2
26013-120302	13	4
26014-060202	5	3
26016-080252	102	16

Parts No.	Fig. No.	Ref. No.
26016-080252	103	19
		20
26016-080352	108	6
26033-050102	43	34 -1
26106-060102	34	19
	57	10
26106-060122	3	20
	4	20
	47	7
	57	11
26106-060142	3	21
	4	21
	35	18
	67	2
26106-060162	48	6
26106-060182	35	13
	40	8
26106-060252	9	3
26106-060282	52	24
26106-060322	34	14
26106-080122	17	21
	32	23
	33	23
26106-080142	1	25
		25 -1
	2	22
		22 -1
	17	22
	63	5
26106-080202	35	24
26106-080252	17	23
	28	4
	95	2
	97	8
	100	2
	109	13
26106-080282	64	6
		6 -2
26106-080302	3	8 -1
	4	8 -1
	16	21
		22
	41	6
	60	4
	61	4
26106-080322	1	32
	2	29
26106-080502	64	6 -1
26106-080602	3	8
	4	8

Parts No.	Fig. No.	Ref. No.
26106-080652	41	7
26106-080852	3	9
	4	9
26106-080902	3	10
	4	10
	34	18
	35	32
26106-081102	34	20
26106-081152	3	11
		12
	4	11
		12
26106-100162	60	7
	61	7
26106-100252	6	2
	13	5
	103	21
		23
26106-100302	59	4
26106-100322	66	4
	79	4
	80	2
	81	2
	82	2
26115-080802	20	12
26116-080202	92	4
26116-080252	92	8
26116-080402	72	9
26116-080602	40	5
	72	10
26203-080202	21	4
26203-080402	73	9
26203-080452	72	9 -1
26203-080602	73	10
26203-080652	72	10 -1
26206-100302	107	7
26216-060182	35	11
26216-080652	16	15
	17	15
26216-080902	35	33
26217-080552	16	27
	17	24
	19	10
26347-080002	32	18
	33	5
26366-060002	18	9
	35	12
26366-080002	1	30
	2	27
	3	4

Parts No. Index

Parts No.	Fig. No.	Ref. No.
26366-080002	4	4
	16	16
		28
	17	16
		25
	19	11
	35	34
	53	8
	60	6
	61	6
26450-050102	22	12
26450-080202	103	22
26450-080282	82	3
26450-080302	107	8
26554-040062	32	19
26554-040082	32	20
	33	15
26554-040102	33	20
26554-050102	35	7
26557-050102	9	7
26557-050122	56	11
	57	12
	67	5
26557-060102	3	17
	4	17
26587-050102	43	34
26587-080122	22	10
	23	10
26646-040352	96	13
	101	13
	110	14
26696-100002	16	13
	17	13
26703-080002	16	31
	20	15
26706-100002	66	5
	79	5
	80	3
	81	3
	82	4
	107	9
26716-050002	68	10
	84	8
		12
	86	9
26716-060002	56	12
	95	20
	100	8
	109	14
26716-160002	88	16

Parts No.	Fig. No.	Ref. No.
26736-100002	96	10
	101	10
	110	11
26756-050002	56	13
26756-060002	54	3
	55	11
26756-080002	16	46
		52
	17	40
		46
	59	5
	66	3
	79	3
26776-120002	11	3
	12	4
26776-180002	24	10
26911-100102	95	6
26921-080102	16	40
	17	34
27210-200300	1	17
	15	3
		6
	16	25
	89	21
27233-250000	72	4
	73	4
27243-300000	1	11
	2	11
27310-070001	16	9 -1
	17	9 -1
28110-100130	69	3
28110-120140	69	4
28110-170190	69	5
28110-220240	69	6
28110-270300	88	18
28150-040000	88	19
28150-050000	88	20
28210-000031	88	21
28210-000070	88	22
28210-000080	74	1
28312-200750	88	23
41710-000380	83	3
41710-000410	57	2
	67	3
41730-000680	83	2 -1
42222-003550	10	10
43400-500390	91	29
43400-500450	55	13
	91	30
43662-010030	37	1

Parts No.	Fig. No.	Ref. No.
43662-015020	76	1
43666-020951	37	4
	76	4
45414-500260	81	1
46150-001110	68	6
	84	5
	86	6
46150-003680	63	2
	89	22
	90	21
48110-025063	66	1 -1
48110-028063	66	1
	79	6
48110-032411	66	2
	79	2
48110-032502	79	1
704507-92100	69	1
705311-22500	25	3
	89	5
	90	5
705311-23600	26	5
705325-22540	25	12
721085-21701	24	1
721450-02500	8	1
721450-02611	8	8
721450-02621	8	14
721450-11650	16	41
	17	35
721450-11660	16	47
	17	41
721500-61560	52	6
728170-53100	45	1
728171-23100	26	1
728270-92400	88	1
728370-01610	3	1
	4	1
728370-11520	18	1
728370-13500	20	1
728370-13501	20	1 -1
728372-11700	16	1
	17	1
728374-01560	1	1
728374-51100	43	1
728374-51101	43	1 -1
728374-92600	91	1
728390-44500	35	1
728397-01560	2	1
728695-43500	34	10
771016-61620	52	2 -1
83213-003012	77	1

Parts No.	Fig. No.	Ref. No.
947859-20010	75	12
977782-00122	75	1
X211413005	70	8
X211415006	70	14
X21142835	70	21
X2114314	70	12
X21143215	70	6
X211433101	70	10
X21144454	70	13
X21144661	70	16
X211447009	70	19
X211451005	70	2
X21145312	70	7
X21145352	70	9
X21145866	70	22
X211462101	70	5
X21146963	70	17
X21147155	70	4
X211476503	70	15
X21148110	70	3
X21148313	70	11
X21148852	70	20
X21149652	70	18
X6201SD	71	3
X6203BM	71	16
XBP1901300	75	3
XBP1901820	75	7
XBP1901830	75	8
XBP1901910	75	9
XBP1901920	75	10
XBP1901950	75	11
XBP1902200	75	2 -1
XBP1902400	75	4
XBP1902810	75	6
XBP1905500	75	5
XBP2901200	75	2
XL12013262	71	9
XL13513134	71	12
XL15014042	71	15
XL15018015	71	18
XL1501810	71	19
XL15028001	71	20
XL15542001	71	4
XL15553002	71	5
XL1556315	71	7
XL15571001	71	2
XL1557500	71	17 -1
XL2251318	71	11
XL2253320	71	13
XL2253400	71	14

Parts No. Index

Parts No.	Fig. No.	Ref. No.
XL22553012	71	6
XL2255330	71	8
XL22555001	71	17
XTR1Z63	71	10

Parts No.	Fig. No.	Ref. No.

Parts No.	Fig. No.	Ref. No.

Parts No.	Fig. No.	Ref. No.